Pioneer sound.vision.soul

Service Manual

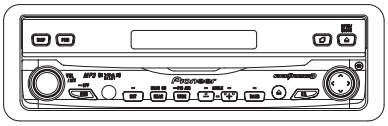

AVIC-N1/UC

ORDER NO.
CRT3221

DVD MULTIMEDIA AV NAVIGATION SERVER

AVIC-N1/UC

DVD AV NAVIGATION HEAD-UNIT

AVIC-X1/EW

This service manual should be used together with the following manual(s):

Model No.	Order No.	Mech.Module	Remarks
CX-3016	CRT3056	MS3	DVD Mech. Module:Circuit Description, Mech. Description, Disassembly

NOTE:

- **Manufactured under license from Dolby Laboratories. "Dolby" and the double-D symbol are trademarks of Dolby Laboratories.**
- **This product has the unit part number as below.**

Unit Part No.	Description
CPN1899	Navigation Unit(AVIC-N1/UC)
CPN1901	Hideaway Unit(AVIC-N1/UC)
CPN1898	Navigation Unit(AVIC-X1/EW)
CPN1900	Hideaway Unit(AVIC-X1/EW)

*) The unit part numbers listed above are not for the service components.

For details, refer to "Important symbols for good services".

PIONEER CORPORATION 4-1, Meguro 1-chome, Meguro-ku, Tokyo 153-8654, Japan
PIONEER ELECTRONICS (USA) INC. P.O. Box 1760, Long Beach, CA 90801-1760, U.S.A.
PIONEER EUROPE NV Haven 1087, Keetberglaan 1, 9120 Melsele, Belgium
PIONEER ELECTRONICS ASIACENTRE PTE. LTD. 253 Alexandra Road, #04-01, Singapore 159936

K-ZZW. FEB. 2004 printed in Japan

SAFETY INFORMATION

UC

CAUTION

This service manual is intended for qualified service technicians; it is not meant for the casual do-it-yourselfer.
Qualified technicians have the necessary test equipment and tools, and have been trained to properly and safely repair complex products such as those covered by this manual.
Improperly performed repairs can adversely affect the safety and reliability of the product and may void the warranty.
If you are not qualified to perform the repair of this product properly and safely, you should not risk trying to do so and refer the repair to a qualified service technician.

WARNING

This product contains lead in solder and certain electrical parts contain chemicals which are known to the state of California to cause cancer, birth defects or other reproductive harm.
Health & Safety Code Section 25249.6 - Proposition 65

This product contains mercury. Disposal of this material may be regulated due to environmental considerations.
For disposal or recycling information, please contact your local authorities or the Electronics Industries Alliance: www.eiae.org.

EW

1. Safety Precautions for those who Service this Unit.

- **Follow the adjustment steps (see pages 192 through 255)in the service manual when servicing this unit. When check ing or adjusting the emitting power of the laser diode exercise caution in order to get safe, reliable results.**

Caution:

1. **During repair or tests, minimum distance of 13cm from the focus lens must be kept.**
2. **During repair or tests, do not view laser beam for 10 seconds or longer.**

2. The triangular label is attached to the mechanism unit frame.

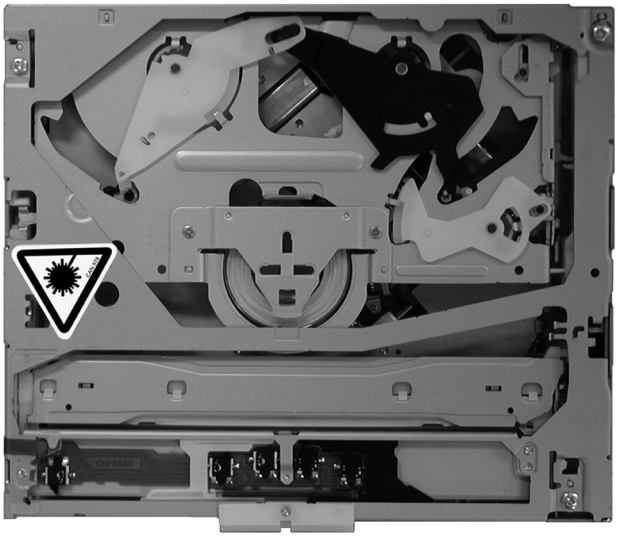

CAUTION

This product contains a laser diode of higher class than 1. To ensure continued safety, do not remove any covers or attempt to gain access to the inside of the product.
Refer all servicing to qualified personnel.

The following caution label appears on your unit.

Location: on the bottom of the unit

En

On the top of the player.

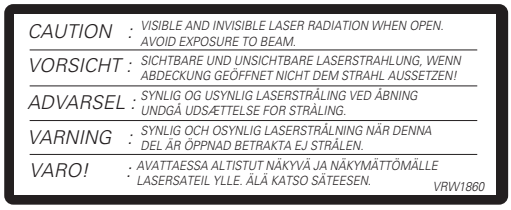

WARNING!

The AEL (accessible emission level)of the laser power output is less than CLASS 1 but the laser component is capable of emitting radiation exceeding the limit for CLASS 1.
A specially instructed person should do servicing operation of the apparatus.

Laser diode characteristics

Wave length:
DVD:640~660nm
CD:770~810nm
Maximum output:2.48mw(Emitting period :9sec.)
DVD:705μw(Emitting period : unlimited)

Additionla Laser Caution

Transistors Q1101 and Q1102 in PCB drive the laser diodes for DVD and CD respectively. When Q1101 or Q1102 is shorted between their terminals, the laser diodes for DVD or CD will radiate beam. If the top cover is removed with no disc loaded while such short-circuit is continued, the naked eyes may be exposed to the laser beam.

● Service Precautions

DVD MECHANISM MODULE section precaution

1. Before disassembling the unit, be sure to turn off the power. Unplugging and plugging the connectors during power-on mode may damage the ICs inside the unit.
2. To protect the pickup unit from electrostatic discharge during servicing, take an appropriate treatment (shorting-solder) by referring to "the DISASSEMBLY" on page 262.
3. After replacing the pickup unit, be sure to check the grating. (See p.196.)
4. During disassembly, be sure to turn the power off since an internal IC might be destroyed when a connector is plugged or unplugged.

NAVIGATION UNIT section precaution

1. Inverter for LCD back light becomes a high voltage.
2. When inspecting the touch panel, use something thin with a round tip such as the touch pen. Furthermore, do not apply excessive force to the touch panel.
3. Since this product does not have OSD IC, OSD for adjustment is displayed by using GGF1416 and GGF1463 at the time of monitor adjustment. As you will find lands for 14 pins with 0.8mm pitch at the left top part of the monitor board, directly solder a flexible PCB of GGD1323 for adjustment. As GGD1322 is not used, be careful not to short the terminal.
4. The region code determination at the time of DVD hardware change is made by the destination (UC: Region 1, EW: Region 2) of the car control unit.
5. If you reconnected the Hide-away unit, press the RESET button.

[Important symbols for good services]
In this manual, the symbols shown-below indicate that adjustments, settings or cleaning should be made securely.
When you find the procedures bearing any of the symbols, be sure to fulfill them:

1. Product safety

You should conform to the regulations governing the product (safety, radio and noise, and other regulations), and should keep the safety during servicing by following the safety instructions described in this manual.

2. Adjustments

To keep the original performances of the product, optimum adjustments or specification confirmation is indispensable. In accordance with the procedures or instructions described in this manual, adjustments should be performed.

3. Cleaning

For optical pickups, tape-deck heads, lenses and mirrors used in projection monitors, and other parts requiring cleaning, proper cleaning should be performed to restore their performances.

4. Shipping mode and shipping screws

To protect the product from damages or failures that may be caused during transit, the shipping mode should be set or the shipping screws should be installed before shipping out in accordance with this manual, if necessary.

5. Lubricants, glues, and replacement parts

Appropriately applying grease or glue can maintain the product performances. But improper lubrication or applying glue may lead to failures or troubles in the product. By following the instructions in this manual, be sure to apply the prescribed grease or glue to proper portions by the appropriate amount.For replacement parts or tools, the prescribed ones should be used.

CONTENTS

1. SPECIFICATIONS

● AVIC-N1/UC

General

Rated power source ..... 14.4 V DC
(10.8 - 15.1 V allowable)
Grounding system ..... Negative type
Max. current consumption
..... 10.0 A
Backup current ..... 6.5 mA or less

Display unit:
Dimensions (W × H × D):
DIN
Chassis ..... 178 × 50 × 160 mm
(7 × 2 × 6-1/4 in.)
Nose ..... 188 × 58 × 34 mm
(7-3/8 × 2-1/4 × 1-3/8 in.)
D
Chassis ..... 178 × 50 × 165 mm
(7 × 2 × 6-1/2 in.)
Nose ..... 170 × 46 × 29 mm
(6-3/4 × 1-3/4 × 1-1/4 in.)
Weight ..... 2.5 kg(5.5 lbs)
Hideaway unit:
Dimensions (W × H × D)
..... 180 × 30 × 140 mm
(5-7/8 × 1-1/8 × 3-7/8 in.)
Weight ..... 0.7 kg(1.5 lbs)

Navigation

GPS Receiver:
System ..... L1, C/Acode GPS
SPS (Standard Positioning Service)
Reception system ..... 8-channel multi-channel reception system
Reception frequency ... 1,575.42 MHz
Sensitivity ..... –130 dbm
Position update frequency
..... Approx. once per second
GPS antenna:
Antenna ..... Micro strip flat antenna/ right-handed helical polarization
Antenna cable ..... 5.0 m(16 ft. 5 in.)
Dimensions (W × H × D)
..... 34 × 13 × 36 mm
(1-3/8 × 1/2 × 1-3/8 in.)
Weight ..... 105 g(0.23 lbs)

Display

Screen size/aspect ratio ..... 6.5 inch wide/16:9
(effective display area: 144 × 76 mm)
Pixels ..... 336,960 (1,440 × 234)
Type ..... TFT active matrix, transmissive type
Color system ..... NTSC
Operating temperature range
..... –14 – +122 °F
Storage temperature range
..... –4 – +176 °F
Angle adjustment ..... 50 – 110°
(initial settings: 110°)

Audio

Continuous power output is 22 W per channel minimum into 4 ohms, both channels driven 50 to 15,000 Hz with no more than 5% THD.
Maximum power output ..... 50 W × 4
50 W × 2 ch/4 Ω + 70 W × 1 ch/2 Ω (for subwoofer)
Load impedance ..... 4 Ω (4 – 8 Ω [2 Ω for 1 ch] allowable)
Preout max output level/output impedance
..... 1.0 V/100 ohm
Equalizer (3-Band Parametric Equalizer):
Low
Frequency ..... 40/80/100/160 Hz
Q Factor ..... 0.35/0.59/0.95/1.15 (+6 dB when boosted)
Gain ..... ±12dB
Mid
Frequency ..... 200/500/1k/2k Hz
Q Factor ..... 0.35/0.59/0.95/1.15 (+6 dB when boosted)
Gain ..... ±12dB
High
Frequency ..... 3.15k/8k/10k/12.5k Hz
Q Factor ..... 0.35/0.59/0.95/1.15 (+6 dB when boosted)
Gain ..... ±12dB
Loudness contour
Low ..... +3.5 dB (100 Hz), +3 dB (10 kHz)
Mid ..... +10 dB (100 Hz), +6.5 dB (10 kHz)
High ..... +11 dB (100 Hz), +11 dB (10 kHz)
(volume: –30 dB)
Tone controls:
Bass
Frequency ..... 40/63/100/160 Hz
Gain ..... ±12dB
Treble
Frequency ..... 2.5k/4k/6.3k/10k Hz
Gain ..... ±12dB
HPF:
Frequency ..... 50/80/125 Hz
Slope ..... –12 dB/oct
Subwoofer:
Frequency ..... 50/80/125 Hz
Slope ..... –18 dB/oct
Gain ..... ±12dB
Phase ..... Normal/Reverse

DVD Drive

System ..... DVD video, Compact disc audio, MP3 system
Usable discs..... DVD video, Compact disc, MP3
Region number..... 1
Signal format:
Sampling frequency .... 44.1/48/96 kHz
Number of quantization bits
..... 16/20/24; linear

Frequency response.....5 – 44,000 Hz (with DVD, at sampling frequency 96 kHz)
Signal-to-noise ratio .....97 dB (1 kHz) (IHF-A network)
(CD: 96 dB (1 kHz) (IHF-A network))
Dynamic range .....95 dB (1 kHz)
(CD: 94 dB (1 kHz))
Distortion .....0.008 % (1 kHz)
Output level:
Video.....1.0 Vp-p/75 Ω (±0.2 V)
Audio .....1.0 V (1 kHz, 0 dB)
Number of channels .....2 (stereo)
MP3 decoding format .....MPEG-1 & 2 Audio Layer 3

FM tuner

Frequency range .....87.9 – 107.9 MHz
Usable sensitivity .....8 dBf (0.7 μV/75 Ω, mono, S/N: 30 dB)
50 dB quieting sensitivity ....10 dBf (0.9 μV/75 Ω, mono)
Signal-to-noise ratio .....75 dB (IHF-A network)
Distortion .....0.3 % (at 65 dBf, 1 kHz, stereo)
0.1 % (at 65 dBf, 1 kHz, mono)
Frequency response.....30 – 15,000 Hz (±3 dB)
Stereo separation .....45 dB (at 65 dBf, 1 kHz)
Selectivity .....80 dB (±200 kHz)
Three-signal intermodulation (desired signal level)
.....30 dBf (two undesired signal level: 100 dBf)

AM tuner

Frequency range .....530 – 1,710 kHz (10 kHz)
Usable sensitivity .....18 μV (S/N: 20 dB)
Signal-to-noise ratio ..... 65 dB (IHF-A network)

Note:

- Specifications and the design are subject to possible modifications without notice due to improvements.

● AVIC-X1/EW

General

Rated power source ..... 14.4 V DC (allowable voltage range: 12.0 – 14.4 V DC)
Earthing system..... Negative type
Max. current consumption ..... 10.0 A
Backup current ..... 6.5 mA or less

Display unit:
Dimensions (W × H × D):
DIN
Chassis..... 178 × 50 × 160 mm
Nose..... 188 × 58 × 34 mm
D
Chassis..... 178 × 50 × 165 mm
Nose..... 170 × 46 × 29 mm
Weight ..... 2.5 kg
Hideaway unit:
Dimensions (W × H × D) ..... 180 × 30 × 140 mm
Weight ..... 0.7 kg

Navigation

GPS Receiver:
System..... L1, C/Acode GPS
SPS (Standard Positioning Service)
Reception system..... 8-channel multi-channel reception system
Reception frequency ... 1,575.42 MHz
Sensitivity ..... –130 dbm
Position update frequency ..... Approx. once per second
GPS aerial:
Aerial ..... Micro strip flat aerial/right-handed helical polarization
Aerial cable ..... 5.0 m
Dimensions (W × H × D) ..... 34 × 13 × 36 mm
Weight ..... 105 g

Display

Screen size/aspect ratio ..... 6.5 inch wide/16:9 (effective display area: 144 × 76 mm)
Pixels ..... 336,960 (1,440 × 234)
Type..... TFT active matrix, transmissive type
Colour system..... NTSC/PAL compatible
Operating temperature range ..... –10 – +50 °C
Storage temperature range ..... –20 – +80 °C
Angle adjustment..... 50 – 110° (initial settings: 110°)

Audio

Maximum power output ..... 50 W × 4
50 W × 2 ch/4 Ω + 70 W × 1 ch/2 Ω (for subwoofer)
Continuous power output ... 27 W × 4 (DIN 45324, +B=14.4 V)
Load impedance ..... 4 Ω (4 – 8 Ω [2 Ω for 1 ch] allowable)
Preout max output level/output impedance ..... 1.0 V/100 ohm
Equalizer (3-Band Parametric Equalizer):
Low
Frequency..... 40/80/100/160 Hz
Q Factor..... 0.35/0.59/0.95/1.15 (+6 dB when boosted)
Gain..... ±12dB
Mid
Frequency..... 200/500/1k/2k Hz
Q Factor..... 0.35/0.59/0.95/1.15 (+6 dB when boosted)
Gain..... ±12dB
High
Frequency..... 3.15k/8k/10k/12.5k Hz
Q Factor..... 0.35/0.59/0.95/1.15 (+6 dB when boosted)
Gain..... ±12dB
Loudness contour
Low..... +3.5 dB (100 Hz), +3 dB (10 kHz)
Mid..... +10 dB (100 Hz), +6.5 dB (10 kHz)
High ..... +11 dB (100 Hz), +11 dB (10 kHz) (volume: –30 dB)
Tone controls:
Bass
Frequency..... 40/63/100/160 Hz
Gain..... ±12dB
Treble
Frequency..... 2.5k/4k/6.3k/10k Hz
Gain..... ±12dB
HPF:
Frequency..... 50/80/125 Hz
Slope..... –12 dB/oct
Subwoofer:
Frequency..... 50/80/125 Hz
Slope..... –18 dB/oct
Gain..... ±12dB
Phase..... Normal/Reverse

DVD Drive

System..... DVD video, Compact disc audio, MP3 system
Usable discs..... DVD video, Compact disc, MP3
Region number..... 2
Signal format:
Sampling frequency .... 44.1/48/96 kHz
Number of quantization bits ..... 16/20/24; linear
Frequency response..... 5 – 44,000 Hz (with DVD, at sampling frequency 96 kHz)
Signal-to-noise ratio ..... 97 dB (1 kHz) (IEC-A network)

(CD: 96 dB (1 kHz) (IEC-A network))
Dynamic range.....95 dB (1 kHz)
(CD: 94 dB (1 kHz))
Distortion .....0.008 % (1 kHz)
Output level:
Video.....1.0 Vp-p/75 Ω (±0.2 V)
Audio .....1.0 V (1 kHz, 0 dB)
Number of channels .....2 (stereo)
MP3 decoding format .....MPEG-1 & 2 Audio Layer 3

FM tuner

Frequency range .....87.5 – 108.0 MHz
Usable sensitivity .....8 dBf (0.7 μV/75 Ω, mono, S/N: 30 dB)
50 dB quieting sensitivity ....10 dBf (0.9 μV/75 Ω, mono)
Signal-to-noise ratio .....75 dB (IEC-A network)
Distortion .....0.3 % (at 65 dBf, 1 kHz, stereo)
0.1 % (at 65 dBf, 1 kHz, mono)
Frequency response.....30 – 15,000 Hz (±3 dB)
Stereo separation .....45 dB (at 65 dBf, 1 kHz)
Selectivity .....80 dB (±200 kHz)

MW tuner

Frequency range .....531 – 1,602 kHz (9 kHz)
Usable sensitivity .....18 μV (S/N: 20 dB)
Signal-to-noise ratio .....65 dB (IEC-A network)

LW tuner

Frequency range .....153 – 281 kHz
Usable sensitivity .....30 μV (S/N: 20 dB)
Signal-to-noise ratio .....65 dB (IEC-A network)

Note:

- Specifications and the design are subject to possible modifications without notice due to improvements.

2. EXPLODED VIEWS AND PARTS LIST

NOTES : • *Parts marked by " * " are generally unavailable because they are not in our Master Spare Parts List.*
• *Screw adjacent to ▽ mark on the product are used for disassembly.*
• *For the applying amount of lobricants or glue, follow the instructions in this manual.*
(In the case of no amount instructions,apply as you think it appropriate.)

2.1 PACKING (AVIC-N1/UC)

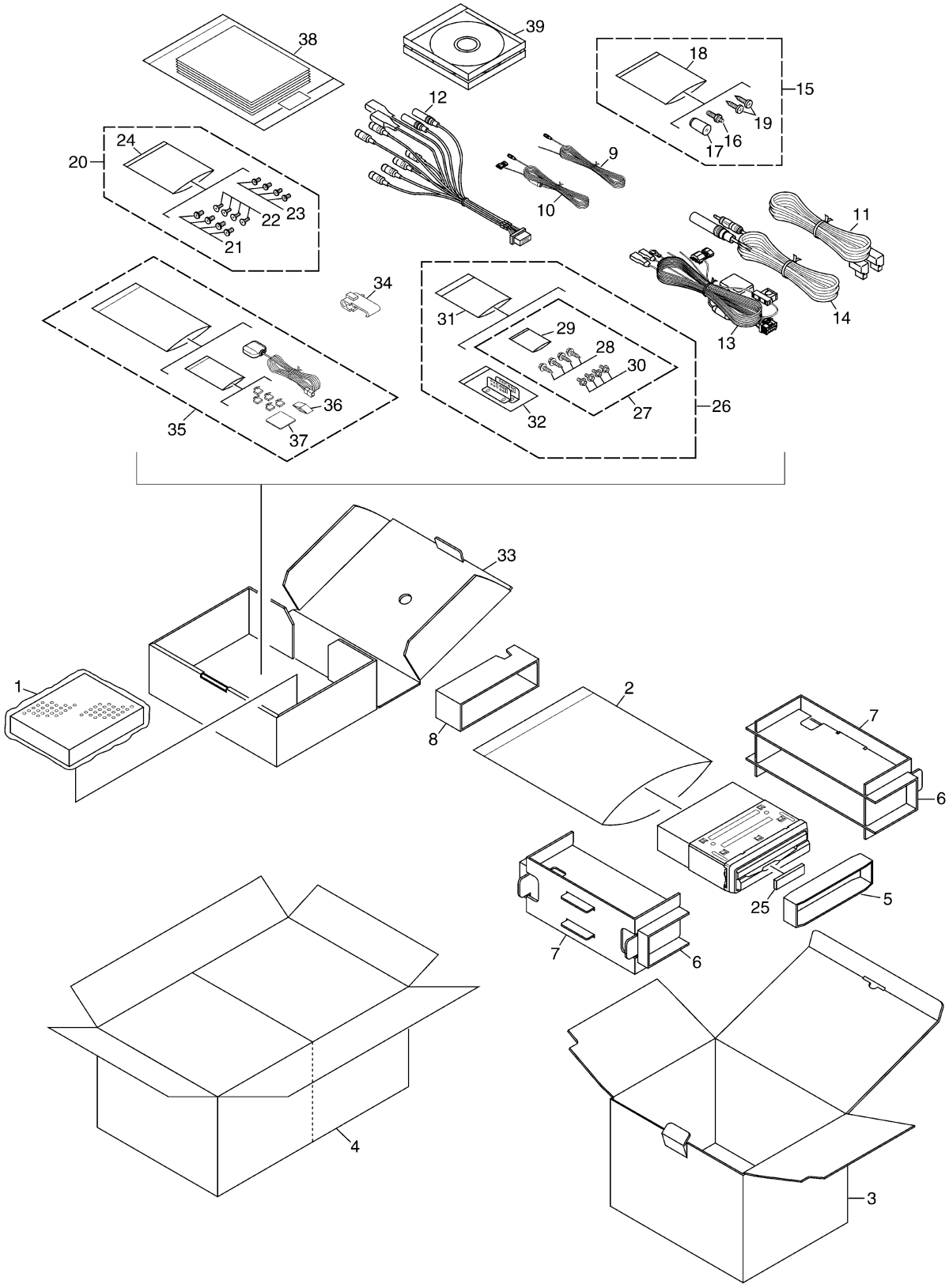

PACKING (AVIC-N1/UC) SECTION PARTS LIST

Mark	No.	Description	Part No.
	1	Air Cushioned Bag	CEG1007
	2	Polyethylene Bag	CEG1173
	3	Carton	CHG5201
	4	Contain Box	CHL5201
	5	Protector	CHP2387
	6	Protector	CHP2445
	7	Protector	CHP2446
	8	Protector	CHP2555
	9	Cord	CDE5044
	10	Cord	CDE6825
	11	Cord Assy	CDE7398
	12	Cord Assy	CDE7399
	13	Cord Assy	CDE7487
	14	Antenna Cable	CDH1325
	15	Accessory Assy	CEA3685
	16	Screw	CBA1650
	17	Bush	CNV1917
*	18	Polyethylene Bag	E36-615
	19	Screw	JGZ20P070FTC
	20	Screw Assy	CEA3686
	21	Screw	BMZ50P060FTC
	22	Screw(M4x6)	CBA1468
	23	Screw	CMZ50P060FTC
*	24	Polyethylene Sheet	CNM4338
	25	Spacer	CNM9149
	26	Accessory Assy	CEA3996
	27	Screw Assy	CEA4396
	28	Screw	CBA1795
*	29	Polyethylene Sheet	CNM4338
	30	Screw	HMF40P080FTC
*	31	Polyethylene Bag	CEG1163
	32	Angle Assy	CXC1079
	33	Sub Carton	CHG5199
	34	Connector	CKX1049
	35	GPS Antenna Assy	CXB9354
	36	Water Proof Pad	CZN5442
	37	Sheet	CZN5453
	38-1	Polyethylene Bag	CEG1116
	38-2	Owner's Manual	CRB1915
	38-3	Owner's Manual	CRB1916
	38-4	Owner's Manual/PA/FRE	CRB1917
	38-5	Owner's Manual/PA/FRE	CRB1918
	38-6	Installation Manual	CRD3837
	38-7	Caution Card	CRP1310
*	38-8	Card	ARY1048
	38-9	Cleaning Cloth Assy	CEA3952
*	38-10	Registration Card	CRY1229
	39	DVD-ROM	CPJ1158

● Owner's Manual, Installation Manual

Part No.	Language
CRB1915, CRB1916	English
CRB1917, CRB1918	French
CRD3837	English, French

2.2 PACKING (AVIC-X1/EW)

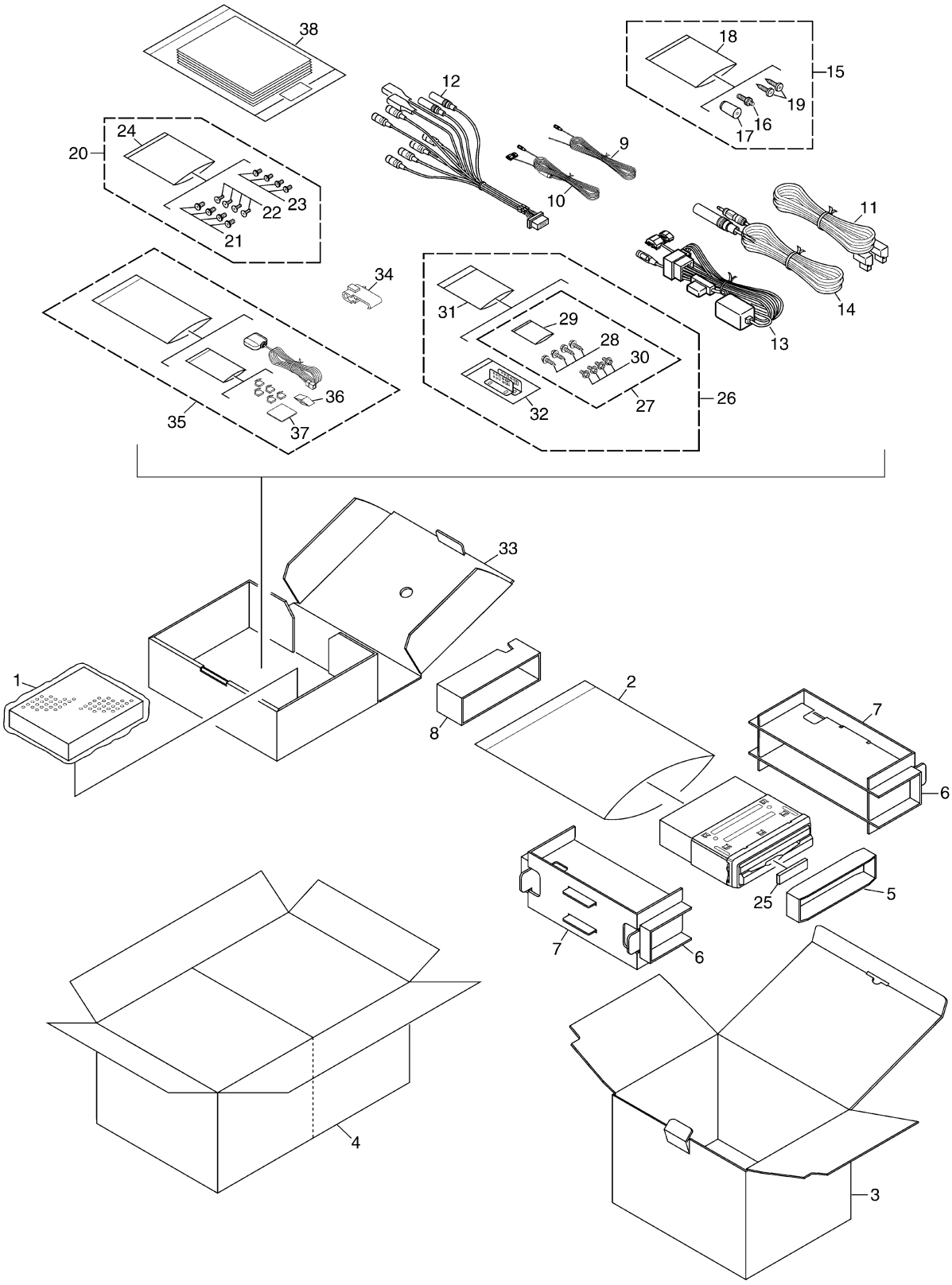

PACKING (AVIC-X1/EW) SECTION PARTS LIST

Mark	No.	Description	Part No.
	1	Air Cushioned Bag	CEG1007
	2	Polyethylene Bag	CEG-162
	3	Carton	CHG5200
	4	Contain Box	CHL5200
	5	Protector	CHP2387
	6	Protector	CHP2445
	7	Protector	CHP2446
	8	Protector	CHP2555
	9	Cord	CDE5044
	10	Cord	CDE6825
	11	Cord Assy	CDE7398
	12	Cord Assy	CDE7399
	13	Cord Assy	CDE7486
	14	Antenna Cable	CDH1325
	15	Accessory Assy	CEA3685
	16	Screw	CBA1650
	17	Bush	CNV1917
*	18	Polyethylene Bag	E36-615
	19	Screw	JGZ20P070FTC
	20	Screw Assy	CEA3686
	21	Screw	BMZ50P060FTC
	22	Screw(M4x6)	CBA1468
	23	Screw	CMZ50P060FTC
*	24	Polyethylene Sheet	CNM4338
	25	Spacer	CNM9149
	26	Accessory Assy	CEA3996
	27	Screw Assy	CEA4396
	28	Screw	CBA1795
*	29	Polyethylene Sheet	CNM4338
	30	Screw	HMF40P080FTC
*	31	Polyethylene Bag	CEG1163
	32	Angle Assy	CXC1079
	33	Sub Carton	CHG5199
	34	Connector	CKX1049
	35	GPS Antenna Assy	CXB9354
	36	Water Proof Pad	CZN5442
	37	Sheet	CZN5453
	38-1	Polyethylene Bag	CEG1116
	38-2	Owner's Manual/PEE/ENG	CRB1903
	38-3	Owner's Manual/PEE/ENG	CRB1904
	38-4	Owner's Manual/PEE/SPE	CRB1905
	38-5	Owner's Manual/PEE/SPE	CRB1906
	38-6	Owner's Manual/PEE/GER	CRB1907
	38-7	Owner's Manual/PEE/GER	CRB1908
	38-8	Owner's Manual/PEE/FRE	CRB1909
	38-9	Owner's Manual/PEE/FRE	CRB1910
	38-10	Owner's Manual/PEE/ITA	CRB1911
	38-11	Owner's Manual/PEE/ITA	CRB1912
	38-12	Owner's Manual/PEE/DUT	CRB1913
	38-13	Owner's Manual/PEE/DUT	CRB1914
	38-14	Installation Manual	CRD3836
*	38-15	Passport	CRY1013
*	38-16	Warranty Card	CRY1157
	38-17	Cleaning Cloth Assy	CEA3952
	38-18	Sheet	CNM8603
*	38-19	Lock Tie	CNV-754

● Owner's Manual, Installation Manual

Part No.	Language
CRB1903, CRB1904	English
CRB1905, CRB1906	Spanish
CRB1907, CRB1908	German
CRB1909, CRB1910	French
CRB1911, CRB1912	Italian
CRB1913, CRB1914	Dutch
CRD3836	English, Spanish, German, French, Italian, Dutch

2.3 NAVIGATION UNIT (1)

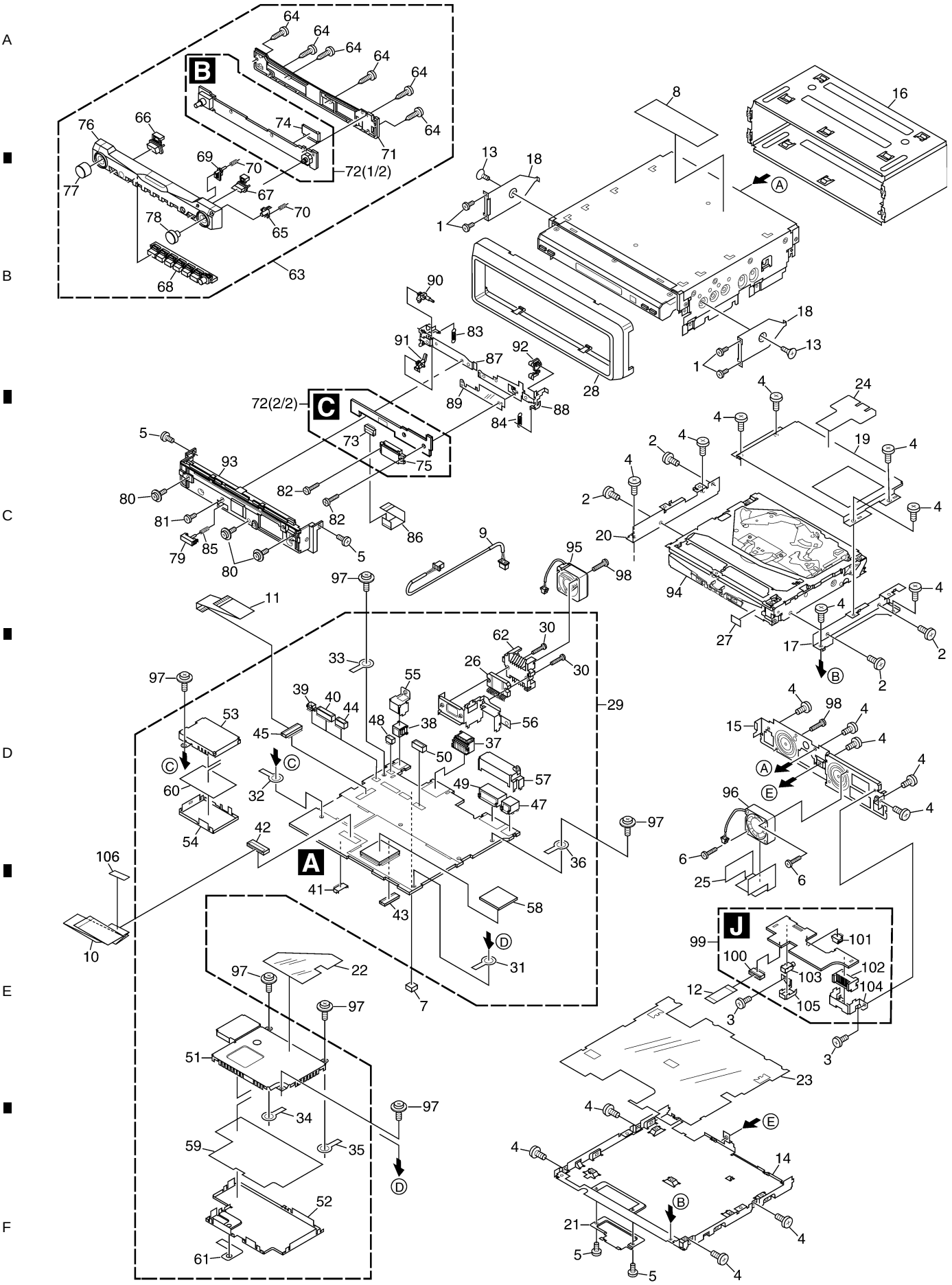

NAVIGATION UNIT (1) SECTION PARTS LIST

Mark	No.	Description	Part No.
	1	Screw	BMZ20P030FZK
	2	Screw	BMZ20P035FTC
	3	Screw	BMZ26P025FTC
	4	Screw	BMZ26P040FTC
	5	Screw(M2x2.5)	CBA1615
	6	Screw(M2.6x12)	CBA1620
	7	Spacer	CNM9200
	8	Label(EW model)	VRW1860
	9	Cord Assy	CDE7401
	10	FFC	CDE7402
	11	FFC	CDE7403
	12	FFC	CDE7727
	13	Screw	CMZ50P060FTC
	14	Case	CNB2929
	15	Panel	CNB3048
	16	Holder	CNC9510
	17	Bracket	CND1438
	18	Bracket	CND1482
	19	Bracket	CND1603
	20	Bracket	CND1947
	21	Holder	CND1948
	22	Insulator	CNM8043
	23	Insulator	CNM8571
	24	Insulator	CNM8715
	25	Cover	CNM8874
	26	IC(IC2405)	PAL007A
	27	Spacer	CNM9246
	28	Panel	CNS7797
	29	CC Unit(UC model)	CWM9129
		CC Unit(EW model)	CWM9128
	30	Screw	BMZ26P160FTC
	31	Terminal(CN100)	CKF1064
	32	Terminal(CN604)	CKF1064
	33	Terminal(CN605)	CKF1064
	34	Terminal(CN614)	CKF1064
	35	Terminal(CN615)	CKF1064
	36	Terminal(CN2601)	CKF1064
	37	Connector(CN802)	CKM1332
	38	Connector(CN2552)	CKS1940
	39	Connector(CN971)	CKS3124
	40	Connector(CN608)	CKS3751
	41	Connector(CN2701)	CKS3810
	42	Connector(CN2)	CKS4052
	43	Connector(CN305)	CKS4052
	44	Connector(CN609)	CKS4068
	45	Connector(CN607)	CKS4132
	46	•••••	
	47	Connector(CN692)	CKS4473
	48	Connector(CN2551)	CKS4571
	49	Connector(CN731)	CKS4646
	50	Connector(CN691)	CKS4814
	51	Shield	CND1949
	52	Shield	CND1950
	53	Shield	CND1951
	54	Shield	CND1952
	55	Holder	CND1953
	56	Holder	CND1954
	57	Holder	CND1955
	58	Sheet	CNM7902
	59	Insulator	CNM8572
	60	Insulator	CNM8573
	61	Insulator	CNM8856
	62	Heat Sink	CNR1739
	63	Detach Grille Assy(UC model)	GXC1006
		Detach Grille Assy(EW model)	GXC1005
	64	Screw	BPZ20P080FZK
	65	Button(DETACH)	CAC8431
	66	Button(SRC)	CAC8432
	67	Button(EQ)	CAC8433
	68	Button	CAC8434
	69	Button(RESET)	CAC8503
	70	Spring	CBH2680
	71	Cover	CNS7759
	72	Keyboard Unit(UC model)	CWM9133
		Keyboard Unit(EW model)	CWM9132
	73	Connector(CN5901)	CKS3965
	74	Connector(CN5501)	CKS4657
	75	Connector(CN5902)	CKS4658
	76	Grille Unit(UC model)	CXC2562
		Grille Unit(EW model)	CXC2561
	77	Knob Unit(VOLUME)	CXC3733
	78	Knob Unit(SELECT)	CXC3734
	79	Button	CAC7953
	80	Screw(M2x4)	CBA1734
	81	Screw(M2.6x2.5)	CBA1777
	82	Screw(M2x4)	CBA1778
	83	Spring	CBH2681
	84	Spring	CBH2682
	85	Spring	CBH2790
	86	FFC	CDE7405
	87	Holder	CND1840
	88	Holder	CND1841
	89	Insulator	CNM8510
	90	Arm	CNV7567
	91	Arm	CNV7568
	92	Arm	CNV7569
	93	Panel Unit	CXC2693
	94	DVD Mechanism Module(MS3)	CXK6325
	95	Fan Motor	CXM1284
	96	Fan Motor	CXM1289
	97	Screw	ISS26P050FTC
	98	Screw	PMZ20P160FTC
	99	Mother Tuner Unit(UC model)	CWM9137
		Mother Tuner Unit(EW model)	CWM9136
	100	Connector(CN2801)	CKS4871
	101	Connector(CN2802)	CKS3124
	102	Connector(CN2803)	CKM1365
	103	Connector(CN2804)	CKS4752
	104	Holder	CND1956
	105	Holder	CND1957
	106	Insulator	CNM9236

2.4 NAVIGATION UNIT (2)

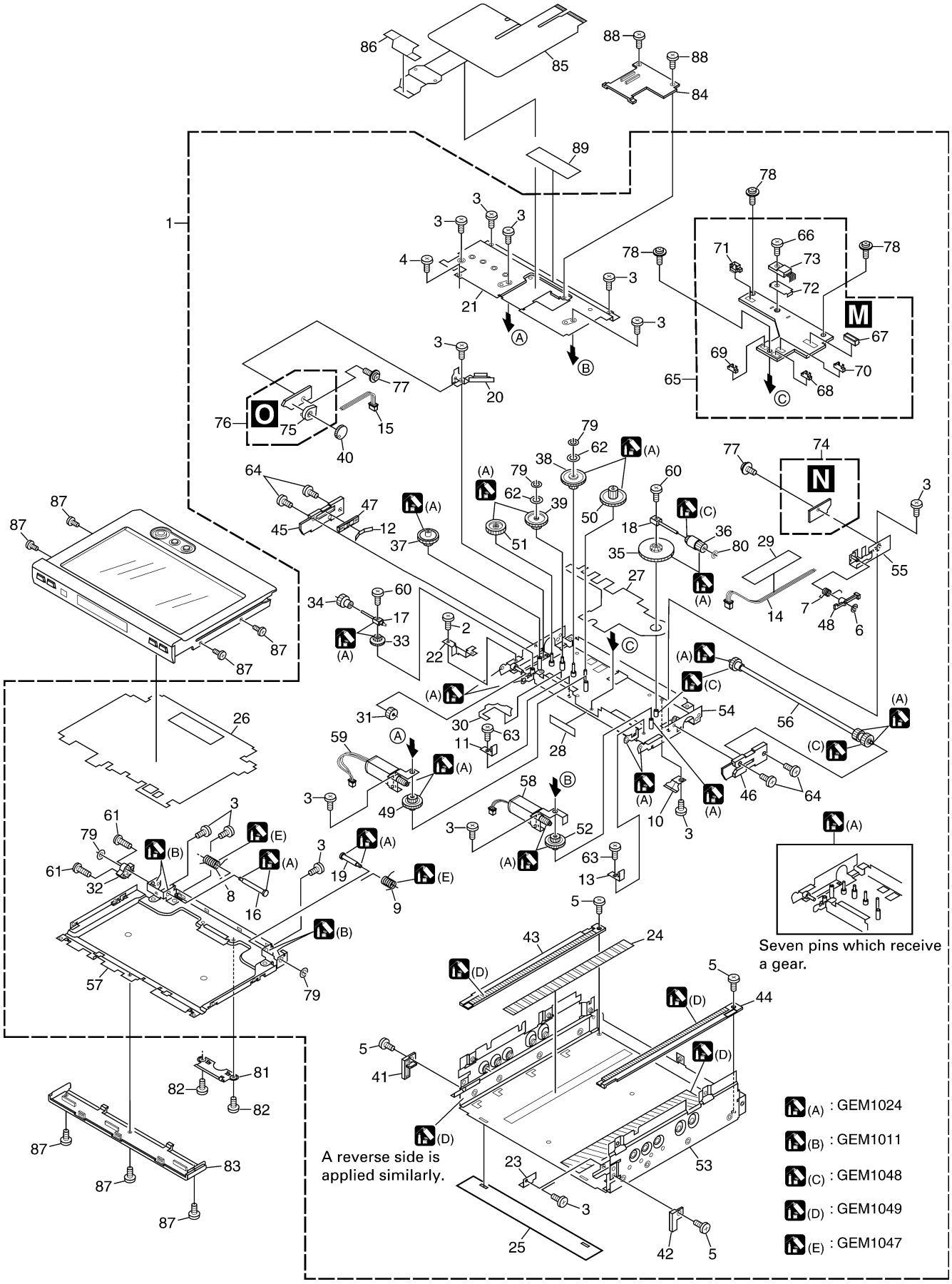

NAVIGATION UNIT (2) SECTION PARTS LIST

Mark No.	Description	Part No.
1	Drive Unit	CXB9508
2	Screw(M2x3)	CBA1082
3	Screw(M2x2.5)	CBA1250
4	Screw(M2x4)	CBA1277
5	Screw(M2x1.5)	CBA1615
6	Washer	CBF1038
7	Spring	CBH2645
8	Spring	CBH2646
9	Spring	CBH2647
10	Spring	CBL1585
11	Spring	CBL1586
12	Spring	CBL1587
13	Spring	CBL1642
14	Cord Assy	CDE7047
15	Cord Assy	CDE7213
16	Shaft	CLA4270
17	Shaft	CLA4305
18	Shaft	CLA4306
19	Shaft	CLA4309
20	Bracket	CND1221
21	Case	CND1229
22	Holder	CND1318
23	Holder	CND1449
24	Sheet	CNM8522
25	Sheet	CNM8037
26	Insulator	CNM8048
27	Insulator	CNM8158
28	Sheet	CNM8159
29	Tape	CNM8160
30	Insulator	CNM8294
31	Gear	CNR1664
32	Gear	CNR1665
33	Gear	CNR1677
34	Gear	CNR1678
35	Gear	CNR1679
36	Gear	CNR1680
37	Gear	CNR1688
38	Gear	CNR1708
39	Gear	CNR1709
40	Gear	CNV7383
41	Holder	CNV7384
42	Holder	CNV7385
43	Rack	CNV7386
44	Rack	CNV7387
45	Slider	CNV7388
46	Slider	CNV7389
47	Holder	CNV7390
48	Arm	CNV7391
49	Gear	CNV7522
50	Gear	CNV7523
51	Gear	CNV7524
52	Gear	CNV7529
53	Chassis Unit	CXB9509
54	Frame Unit	CXB9511
55	Holder Unit	CXB9512
56	Shaft Unit	CXB9513
57	Holder Unit	CXB9514
58	Motor Unit(M3001)(Position)	CXB9515
59	Motor Unit(M3002)(Angle)	CXB9516
60	Screw	CZB3082
61	Screw	CZB3083
62	Washer	CZB3084
63	Screw(M2x1.8)	CZB3085
64	Screw(M2x4)	CZB3088
65	Main Unit	CZW3087
66	Screw	BMZ26P050FTC
67	Connector(CN3801)	CKS4068
68	Connector(CN3802)	CKS4732
69	Connector(CN3803)	CKS4732
70	Connector(CN3807)	CKS4733
71	Connector(CN3809)	CKS4733
72	Heat Sink	CND1228
73	IC(IC3801)	BA00AST
74	SW Unit	CZW3088
75	Volume(VR3841)	CCW1025
76	Volume Unit	CZW3089
77	Screw	IMS20P020FTC
78	Screw	IMS20P030FZK
79	Washer	YE15S
80	Washer	CZB3089
81	Holder	CND1314
82	Screw	JFZ20P022FNI
83	Cover	CNS7760
84	Holder	CNV7446
85	Flexible PCB	CNP7621
86	Shield	CNM8969
87	Screw(M2x2)	CBA1753
88	Screw(M2x3)	CBA1797
89	Sheet	CNM9201

2.5 NAVIGATION UNIT (3)

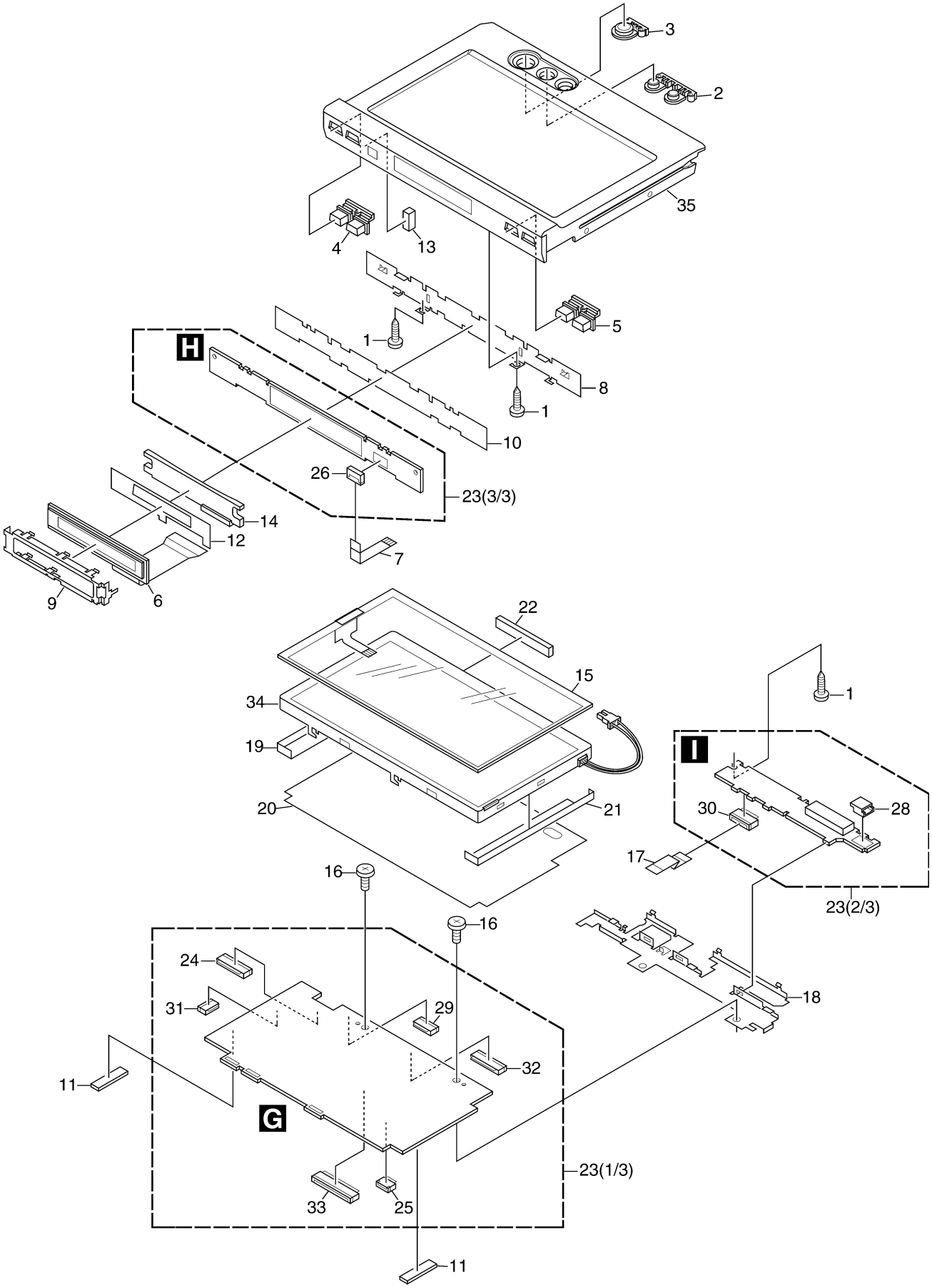

NAVIGATION UNIT (3) SECTION PARTS LIST

Mark	No.	Description	Part No.
	1	Screw	BPZ20P060FTC
	2	Button(NAVI/AV)	CAC8427
	3	Button(NAVI MENU)	CAC8428
	4	Button(OPEN/CLOSE)	CAC8430
	5	Button(DISP,PGM)(UC model)	CAC8504
		Button(DISP,TA)(EW model)	CAC8429
	6	LCD	CAW1828
	7	FFC	CDE7488
	8	Holder	CND2010
	9	Holder	CND2419
	10	Insulator	CNM8616
	11	Spacer	CNM8707
	12	Sheet	CNM8858
	13	Cushion	CNM9148
	14	Lighting Conductor	CNV7564
	15	Touch Panel	CSX1073
	16	Screw(M2x2.5)	CBA1615
	17	FFC	CDE7196
	18	Holder	CND2418
	19	Sheet	CNM7784
	20	Insulator	CNM8031
	21	Sheet	CNM8265
	22	Conductor	CNM8857
	23	Monitor Unit(UC model)	CWM9135
		Monitor Unit(EW model)	CWM9134
	24	Connector(CN4801)	CKS3991
	25	Connector(CN4005)	CKS4054
	26	Connector(CN4301)	CKS4054
	27	•••••	
	28	Connector(CN5002)	CKS4428
	29	Connector(CN4003)	CKS4595
	30	Connector(CN5001)	CKS4595
	31	Connector(CN4681)	CKS4675
	32	Connector(CN4002)	CKS4793
	33	Connector(CN4701)	CKS4818
	34	LCD Panel	CWX3056
	35	Grille Unit(UC model)	CXC3730
		Grille Unit(EW model)	CXC3729

2.6 HIDEAWAY UNIT AND CORD ASSY

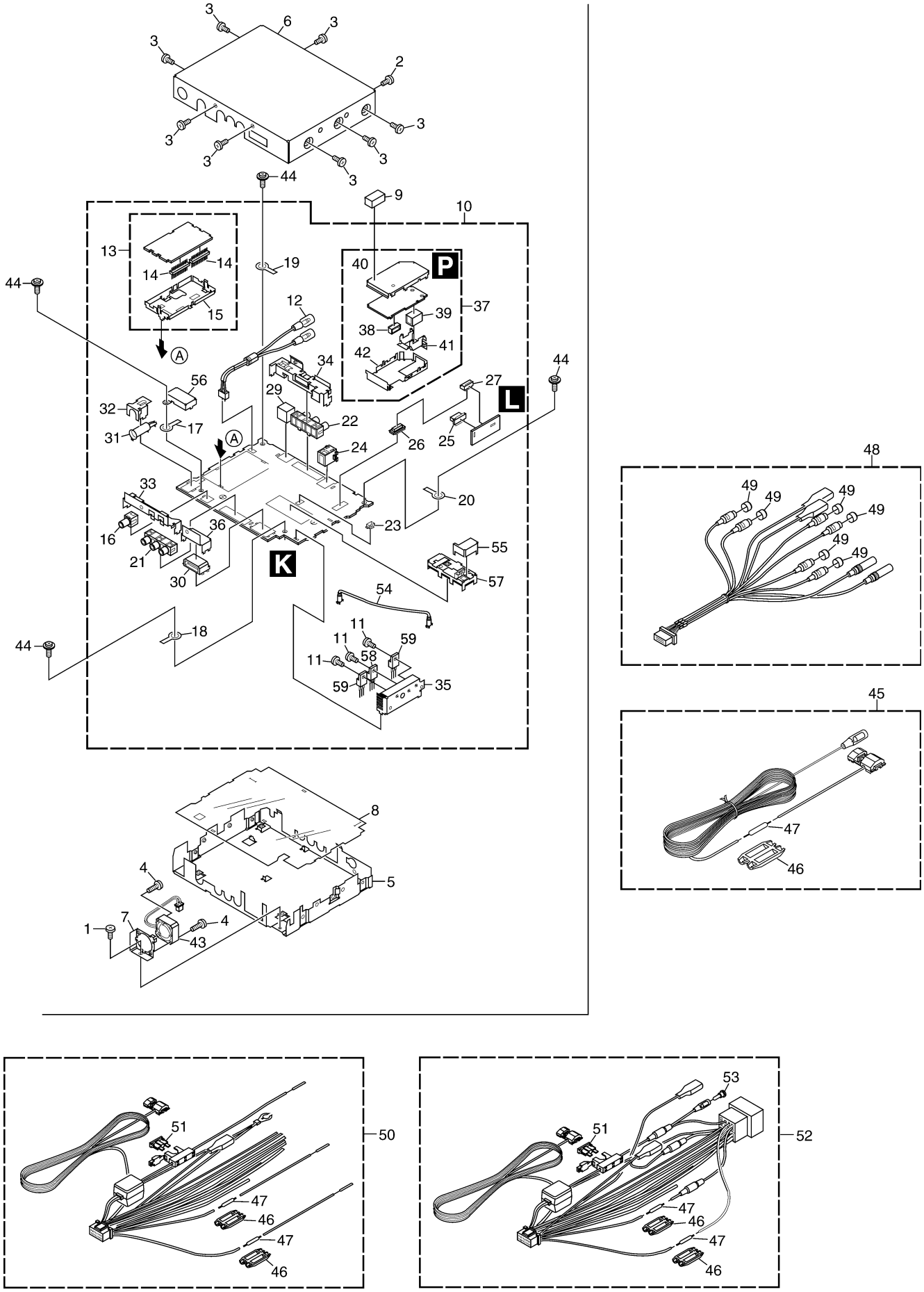

HIDEAWAY UNIT AND CORD ASSY SECTION PARTS LIST

Mark	No.	Description	Part No.
	1	Screw	BMZ26P030FTC
	2	Screw	BMZ26P060FZK
	3	Screw	BSZ26P060FTC
	4	Screw(M2.6x12)	CBA1620
	5	Chassis	CNA2697
	6	Case(UC model)	CNB2925
		Case(EW model)	CNB2924
	7	Holder	CND1905
	8	Insulator	CNM8565
	9	Gasket	CNM8954
	10	Mother Tuner Unit(UC model)	CWM9137
		Mother Tuner Unit(EW model)	CWM9136
	11	Screw	BMZ26P060FTC
	12	Cord Assy(CN1951)	CDE7397
	13	FM/AM Tuner Unit(UC model)	CWE1651
		FM/AM Tuner Unit(EW model)	CWE1650
	14	Connector(CN101,102)	CKS4653
	15	Holder	CND1432
	16	Pin Jack(CN1351)	CKB1065
	17	Terminal(CN1401)	CKF1064
	18	Terminal(CN1403)	CKF1064
	19	Terminal(CN1903)	CKF1064
	20	Terminal(CN1904)	CKF1064
	21	Pin Jack(CN1301)	CKS2918
	22	Pin Jack(CN1701)	CKS2918
	23	Connector(CN1950)	CKS3124
	24	Connector(CN1101)	CKS3414
	25	Connector(CN551)	CKS4065
	26	Connector(CN1841)	CKS4065
	27	Connector(CN552)	CKS4280
	28	•••••	
	29	Connector(CN1201)	CKS4590
	30	Connector(CN1001)	CKS4646
	31	Antenna Jack(CN1402)	CKX1056
	32	Holder	CND1900
	33	Holder	CND1901
	34	Holder	CND1902
	35	Holder	CND1903
	36	Holder	CND1904
	37	GPS Unit(UC model)	CWX2960
		GPS Unit(EW model)	CWX2929
	38	Connector(CN461)	CKS4280
	39	Connector(CN504)	CKS4432
	40	Shield	CNC9192
	41	Holder	CNC9252
	42	Shield	CND1161
	43	Fan Motor	CXM1293
	44	Screw	ISS26P060FTC
	45	Cord	CDE6825
	46	Cap	CNS1472
	47	Resistor	RS1/2PMF102J
	48	Cord Assy	CDE7399
	49	Cap	CNV6727
	50	Cord Assy(UC model)	CDE7487
	51	Fuse(10A)	CEK1136
	52	Cord Assy(EW model)	CDE7486
	53	Cap(EW model)	CKX-003
	54	Cord(EW model)	CDH1332
	55	Shield(EW model)	CND1337
	56	Shield(EW model)	CND1964
	57	Tuner Unit(Y1801)(EW model)	CWE1674
	58	Transistor(Q1907)	2SB1629
	59	Transistor(Q1908,1909)	2SD2396

2.7 DVD MECHANISM MODULE

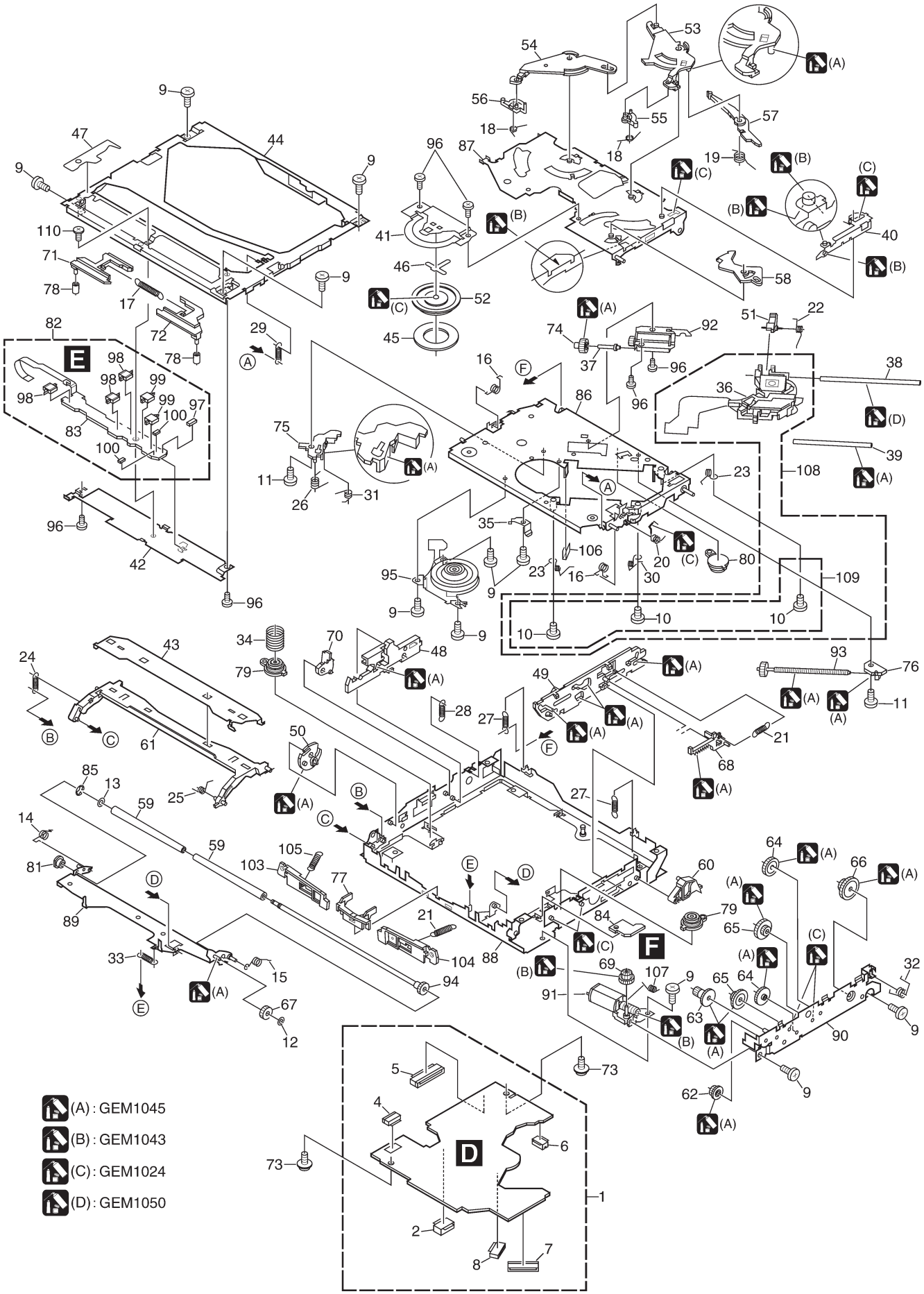

DVD MECHANISM MODULE SECTION PARTS LIST

Mark	No.	Description	Part No.
	1	DVD Core Unit(MS3)	CWX2941
	2	Connector(CN1501)	CKS4282
	3	Connector(CN1401)	CKS4052
	4	Connector(CN1202)	CKS4624
	5	Connector(CN1611)	CKS4052
	6	Connector(CN1603)	CKS4374
	7	Connector(CN1101)	CKS4625
	8	Connector(CN1201)	CKS4067
	9	Screw	BMZ20P020FTC
	10	Screw(M2 x 3.5)	CBA1571
	11	Screw(M2 x 2.5)	CBA1623
	12	Washer	CBF1038
	13	Washer	CBF1064
	14	Spring	CBH2586
	15	Spring	CBH2587
	16	Spring	CBH2588
	17	Spring	CBH2589
	18	Spring	CBH2590
	19	Spring	CBH2591
	20	Spring	CBH2592
	21	Spring	CBH2593
	22	Spring	CBH2594
	23	Spring	CBH2595
	24	Spring	CBH2596
	25	Spring	CBH2597
	26	Spring	CBH2598
	27	Spring	CBH2599
	28	Spring	CBH2600
	29	Spring	CBH2601
	30	Spring	CBH2602
	31	Spring	CBH2603
	32	Spring	CBH2604
	33	Spring	CBH2605
	34	Spring	CBH2711
	35	Spring	CBL1564
	36	Pickup Unit(Service)(DP5)	CXX1639
	37	Shaft	CLA3881
	38	Shaft	CLA4206
	39	Shaft	CLA4207
	40	Lever	CNC9933
	41	Holder	CNC9939
	42	Holder	CND2251
	43	Holder	CNC9941
	44	Frame	CND2250
	45	Sheet	CNM6883
	46	Sheet	CNM8283
	47	Sheet	CNM8287
	48	Lever	CNV8076
	49	Lever	CNV7155
	50	Cam	CNV7156
	51	Rack	CNV7157
	52	Clamper	CNV7158
	53	Arm	CNV7159
	54	Arm	CNV7160
	55	Arm	CNV7161
	56	Arm	CNV7162
*	57	Arm	CNV7163
	58	Arm	CNV7164
	59	Roller	CNV7165
	60	Arm	CNV7166
	61	Guide	CNV8093
	62	Gear	CNV7169
	63	Gear	CNV7170
	64	Gear	CNV7171
	65	Gear(Black)	CNV7172
	66	Gear	CNV7173
	67	Gear	CNV7174
	68	Rack	CNV7175
	69	Gear	CNV7176
	70	Arm	CNV8077
	71	Lever	CNV7178
	72	Lever	CNV7179
	73	Screw	IMS20P030FTC
	74	Gear	CNV7181
	75	Holder	CNV7183
	76	Holder	CNV7184
	77	Guide	CNV7745
	78	Roller	CNV7344
	79	Damper	CNV7470
	80	Damper	CNV7471
	81	Collar	CNV7645
	82	Compound(A)	CWX3024
*	83	Gathering PCB	CNX4277
	84	Compound(B)	CWX2753
	85	Washer	YE20FTC
	86	Chassis Unit	CXB8680
	87	Arm Unit	CXB8681
	88	Frame Unit	CXB8683
	89	Arm Unit	CXB8684
	90	Bracket Unit	CXB8685
	91	Motor Unit(LOADING)(M1)	CXB8687
	92	Motor Unit(CARRIAGE)(M2)	CXB8688
	93	Screw Unit	CXB8689
	94	Roller Unit	CXB8690
	95	Motor(SPINDLE)(M3)	CXM1280
	96	Screw	JFZ20P018FTC
	97	Photo-transistor(Q1299)	CPT231SCTD
	98	Switch(S1201)	CSN1051
	99	Spring Switch(S1204)	CSN1052
	100	Resistor(R1298)	RS1/16S0R0J
	101	•••••	
	102	•••••	
	103	Arm	CNV7742
	104	Arm	CNV7743
	105	Spring	CBH2710
	106	Spring	CBL1643
	107	Spring	CBH2712
	108	Pickup Unit(Service)(Screw)	GXX1234
	109	Screw Assy	CXX1750
	110	Screw(M1.4xM1.4)	CBA1787

3. BLOCK DIAGRAM AND SCHEMATIC DIAGRAM

3.1 BLOCK DIAGRAM

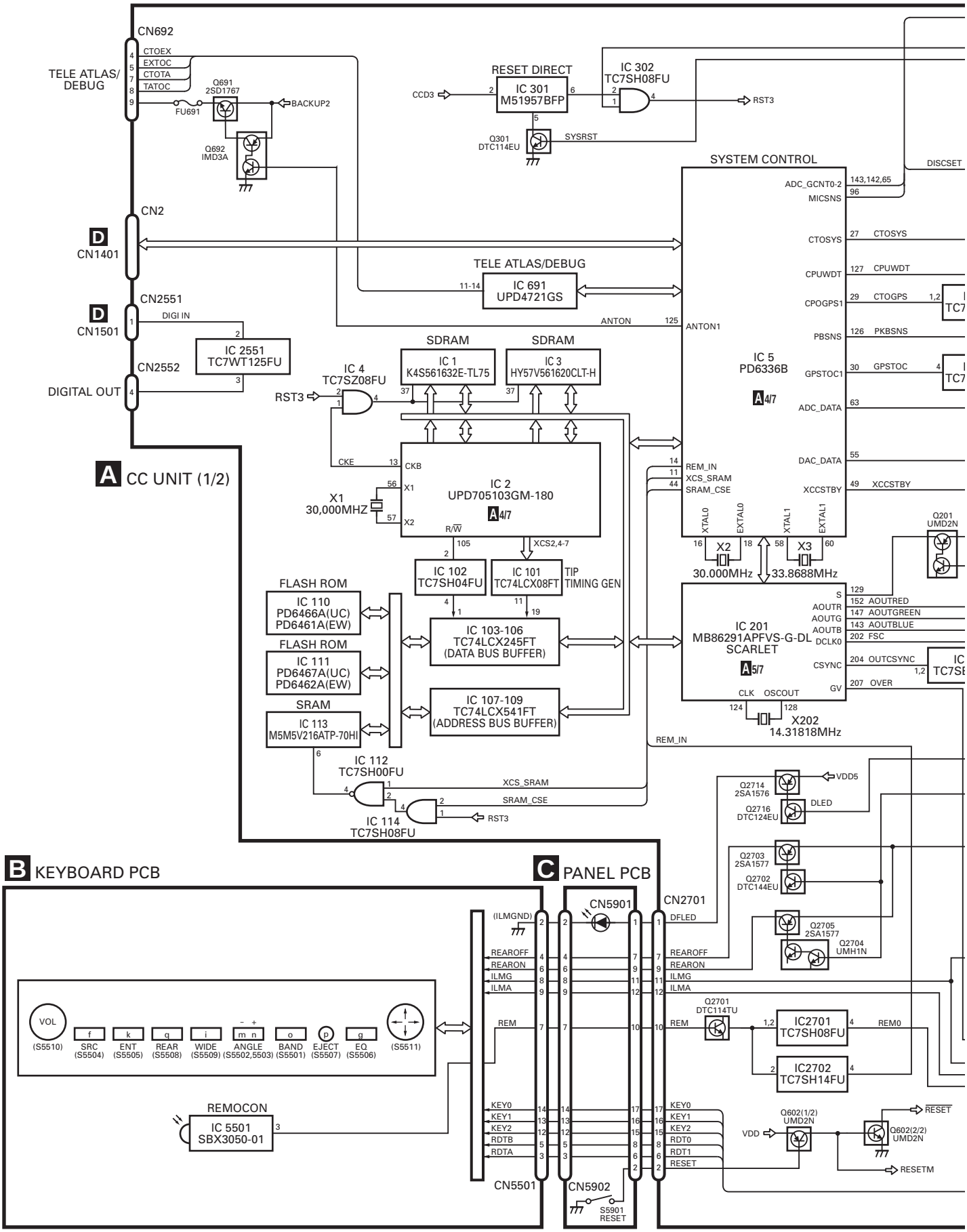

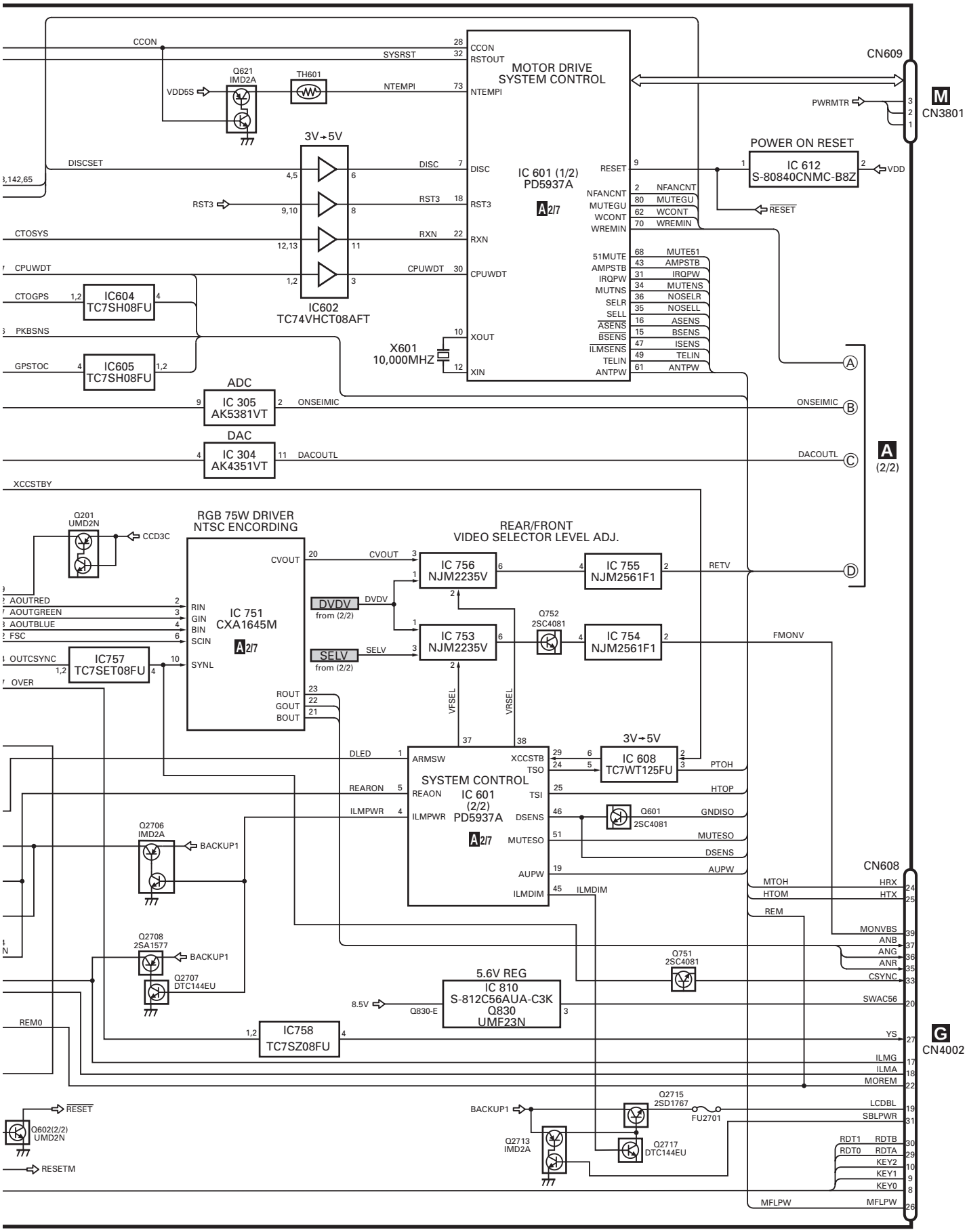
MOTOR DRIVE SYSTEM CONTROL
IC 601 (1/2) PD5937A
A 2/7
CCON
SYSRST
RSTOUT
NTEMPI
DISC
RST3
RXN
CPUWDT
XOUT
XIN
RESET
NFANCNT
MUTEGU
WCONT
WREMIN
51MUTE
AMPSTB
IRQPW
MUTNS
SELR
SELL
ASENS
BSENS
ILMSENS
TELIN
ANTPW
MUTE51
NOSELR
NOSELL
CN609
M
CN3801
PWRMTR
POWER ON RESET
IC 612 S-80840CNMC-B8Z
VDD
Q621 IMD2A
TH601
VDD5S
3V→5V
IC602 TC74VHCT08AFT
IC604 TC7SH08FU
IC605 TC7SH08FU
X601 10,000MHZ
ADC
IC 305 AK5381VT
ONSEIMIC
DAC
IC 304 AK4351VT
DACOUTL
A (2/2)
XCCSTBY
Q201 UMD2N
CCD3C
RGB 75W DRIVER NTSC ENCORDING
IC 751 CXA1645M
A 2/7
CVOUT
RIN
GIN
BIN
SCIN
SYNL
ROUT
GOUT
BOUT
AOUTRED
AOUTGREEN
AOUTBLUE
FSC
OUTCSYNC
OVER
IC757 TC7SET08FU
DVDV
from (2/2)
SELV
REAR/FRONT VIDEO SELECTOR LEVEL ADJ.
IC 756 NJM2235V
IC 755 NJM2561F1
IC 753 NJM2235V
IC 754 NJM2561F1
Q752 2SC4081
RETV
FMONV
VFSEL
VRSEL
SYSTEM CONTROL
IC 601 (2/2) PD5937A
A 2/7
ARMSW
REAON
ILMPWR
XCCSTB
TSO
TSI
DSENS
MUTESO
AUPW
ILMDIM
DLED
REARON
IC 608 TC7WT125FU
PTOH
HTOP
Q601 2SC4081
GNDISO
MUTESO
DSENS
AUPW
Q706 IMD2A
BACKUP1
Q708 2SA1577
Q707 DTC144EU
Q751 2SC4081
5.6V REG
IC 810 S-812C56AUA-C3K
Q830 UMF23N
8.5V
Q830-E
REM0
IC758 TC7SZ08FU
CN608
G
CN4002
MTOH
HTOM
REM
HRX
HTX
MONVBS
ANB
ANG
ANR
CSYNC
SWAC56
YS
ILMG
ILMA
MOREM
LCDBL
SBLPWR
RDT1
RDT0
RDTB
RDTA
KEY2
KEY1
KEY0
MFLPW
Q602(2/2) UMD2N
RESETM
Q2715 2SD1767
FU2701
Q2713 IMD2A
Q2717 DTC144EU

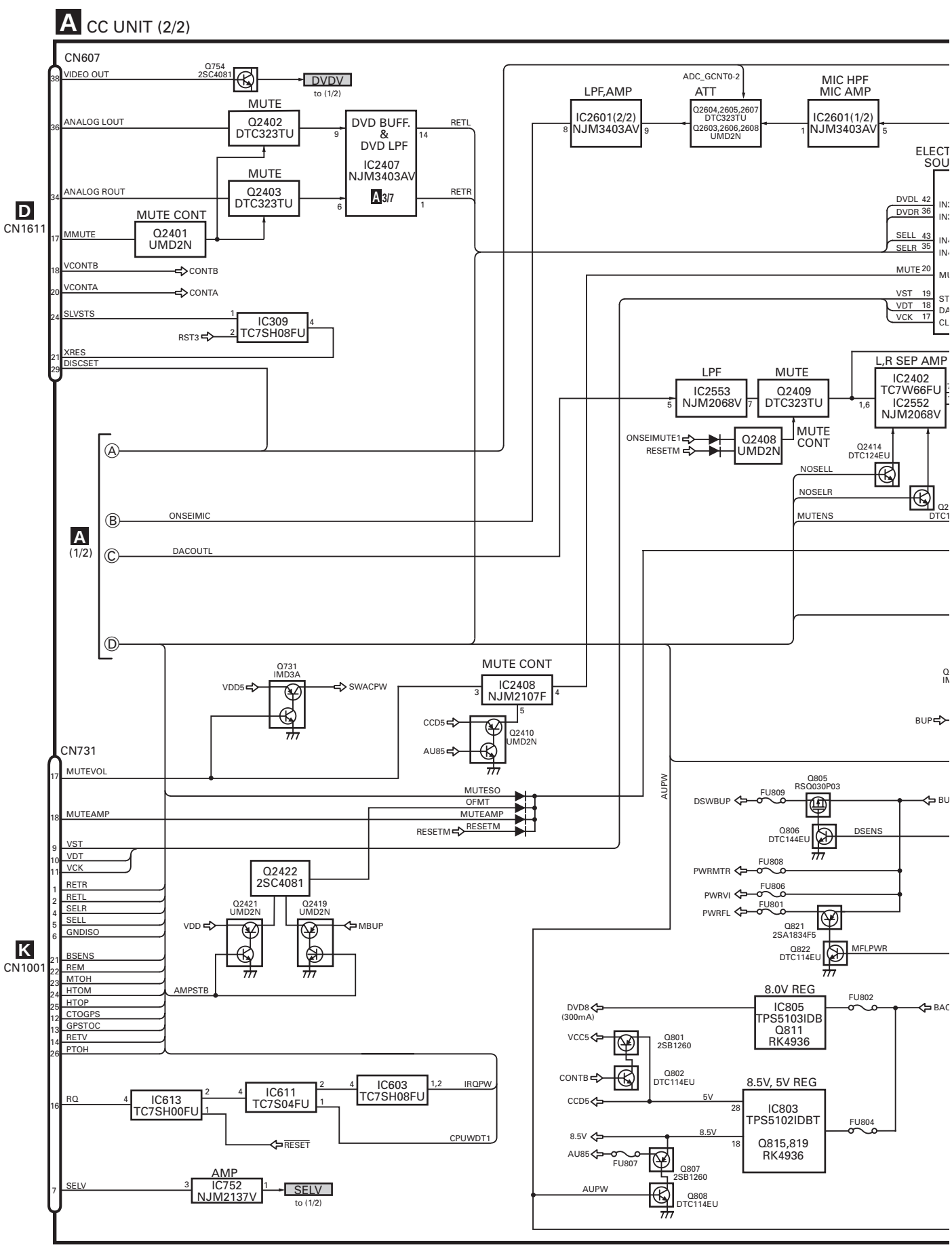
A CC UNIT (2/2)
CN607
VIDEO OUT
Q754 2SC4081
DVDV
to (1/2)
ANALOG LOUT
MUTE
Q2402 DTC323TU
DVD BUFF. & DVD LPF
IC2407 NJM3403AV
A 3/7
RETL
ANALOG ROUT
Q2403 DTC323TU
RETR
D CN1611
MUTE CONT
Q2401 UMD2N
MMUTE
VCONTB
CONTB
VCONTA
CONTA
SLVSTS
IC309 TC7SH08FU
RST3
XRES
DISCSET
LPF,AMP
IC2601(2/2) NJM3403AV
ADC_GCNT0-2
ATT
Q2604,2605,2607 DTC323TU
Q2603,2606,2608 UMD2N
MIC HPF MIC AMP
IC2601(1/2) NJM3403AV
ELECT SOU
DVDL
DVDR
SELL
SELR
MUTE
VST
VDT
VCK
LPF
IC2553 NJM2068V
MUTE
Q2409 DTC323TU
L,R SEP AMP
IC2402 TC7W66FU
IC2552 NJM2068V
ONSEIMUTE1
RESETM
Q2408 UMD2N
MUTE CONT
Q2414 DTC124EU
NOSELL
NOSELR
MUTENS
A (1/2)
ONSEIMIC
DACOUTL
Q731 IMD3A
VDD5
SWACPW
MUTE CONT
IC2408 NJM2107F
CCD5
Q2410 UMD2N
AU85
BUP
CN731
MUTEVOL
MUTESO
OFMT
MUTEAMP
RESETM
VST
VDT
VCK
Q2422 2SC4081
RETR
RETL
SELR
SELL
GNDISO
Q2421 UMD2N
Q2419 UMD2N
VDD
MBUP
K CN1001
BSENS
REM
MTOH
HTOM
HTOP
CTOGPS
GPSTOC
RETV
PTOH
AMPSTB
AUPW
Q805 RSQ030P03
DSWBUP
FU809
Q806 DTC144EU
DSENS
PWRMTR
FU808
PWRVI
FU806
PWRFL
FU801
Q821 2SA1834F5
Q822 DTC114EU
MFLPWR
8.0V REG
IC805 TPS5103IDB
Q811 RK4936
FU802
DVD8 (300mA)
VCC5
Q801 2SB1260
CONTB
Q802 DTC114EU
CCD5
5V
8.5V, 5V REG
IC803 TPS5102IDBT
Q815,819 RK4936
FU804
8.5V
AU85
FU807
Q807 2SB1260
AUPW
Q808 DTC114EU
RQ
IC613 TC7SH00FU
IC611 TC7S04FU
IC603 TC7SH08FU
IRQPW
RESET
CPUWDT1
AMP
IC752 NJM2137V
SELV
SELV
to (1/2)

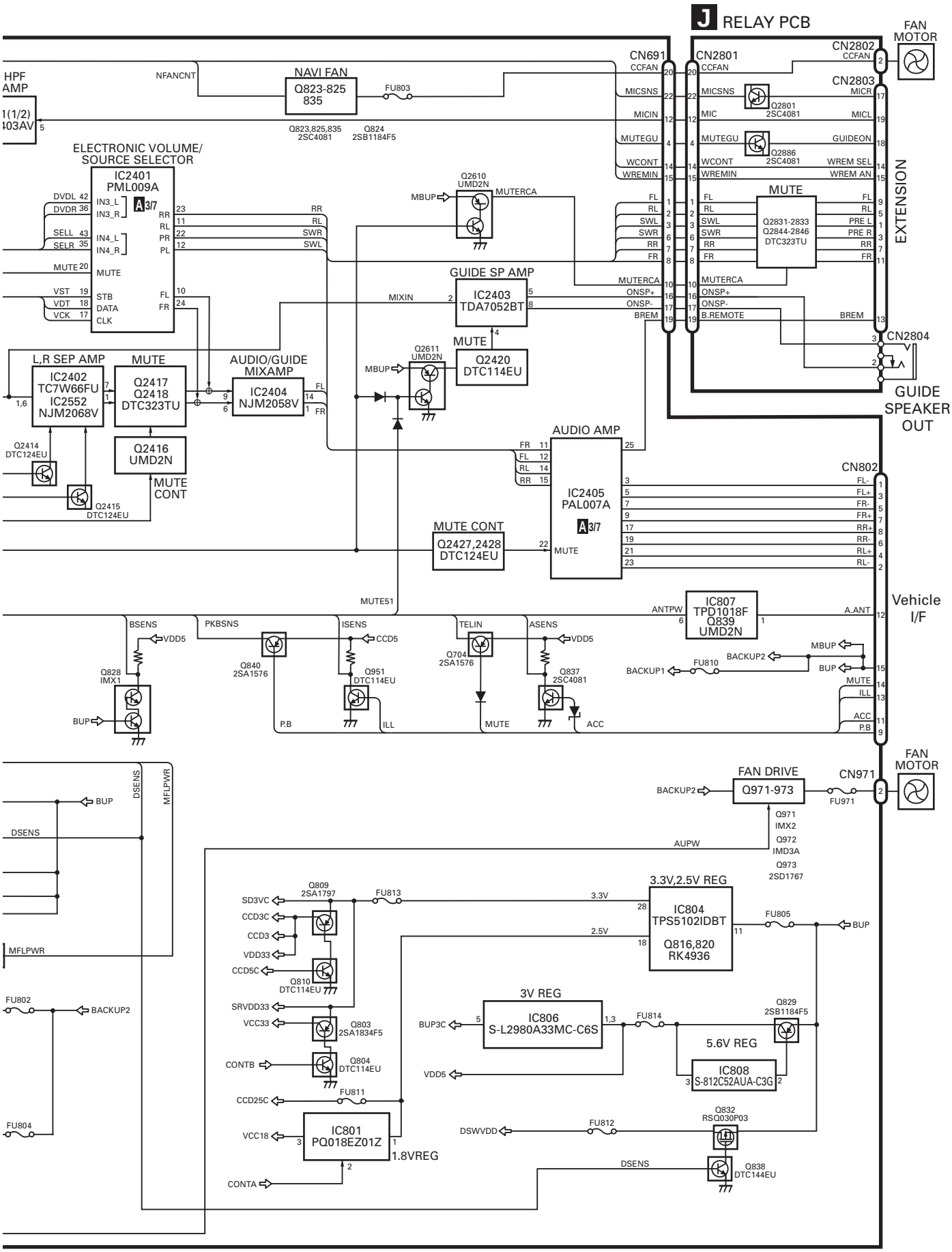
J RELAY PCB
FAN MOTOR
CN691
CN2801
CN2802
CN2803
CN2804
EXTENSION
GUIDE SPEAKER OUT
HPF AMP
NFANCNT
NAVI FAN
Q823-825 835
FU803
Q823,825,835 2SC4081
Q824 2SB1184F5
ELECTRONIC VOLUME/ SOURCE SELECTOR
IC2401 PML009A
A 3/7
Q2610 UMD2N
MUTERCA
MBUP
GUIDE SP AMP
IC2403 TDA7052BT
MIXIN
MUTE
Q2420 DTC114EU
Q2611 UMD2N
L,R SEP AMP
IC2402 TC7W66FU
IC2552 NJM2068V
Q2417 Q2418 DTC323TU
AUDIO/GUIDE MIXAMP
IC2404 NJM2058V
Q2414 DTC124EU
Q2415 DTC124EU
Q2416 UMD2N
MUTE CONT
AUDIO AMP
IC2405 PAL007A
Q2427,2428 DTC124EU
MUTE51
IC807 TPD1018F Q839 UMD2N
Vehicle I/F
BSENS
PKBSNS
ISENS
TELIN
ASENS
Q828 IMX1
Q840 2SA1576
Q951 DTC114EU
Q704 2SA1576
Q837 2SC4081
BACKUP1
FU810
BACKUP2
FAN DRIVE
Q971-973
CN971
FU971
Q971 IMX2
Q972 IMD3A
Q973 2SD1767
AUPW
3.3V,2.5V REG
IC804 TPS5102IDBT
Q816,820 RK4936
FU805
Q809 2SA1797
FU813
Q810 DTC114EU
Q803 2SA1834F5
Q804 DTC114EU
FU811
IC801 PQ018EZ01Z
1.8VREG
3V REG
IC806 S-L2980A33MC-C6S
BUP3C
FU814
Q829 2SB1184F5
5.6V REG
IC808 S-812C52AUA-C3G
FU812
Q832 RSQ030P03
Q838 DTC144EU
DSWVDD
FU802
FU804
DSENS
MFLPWR

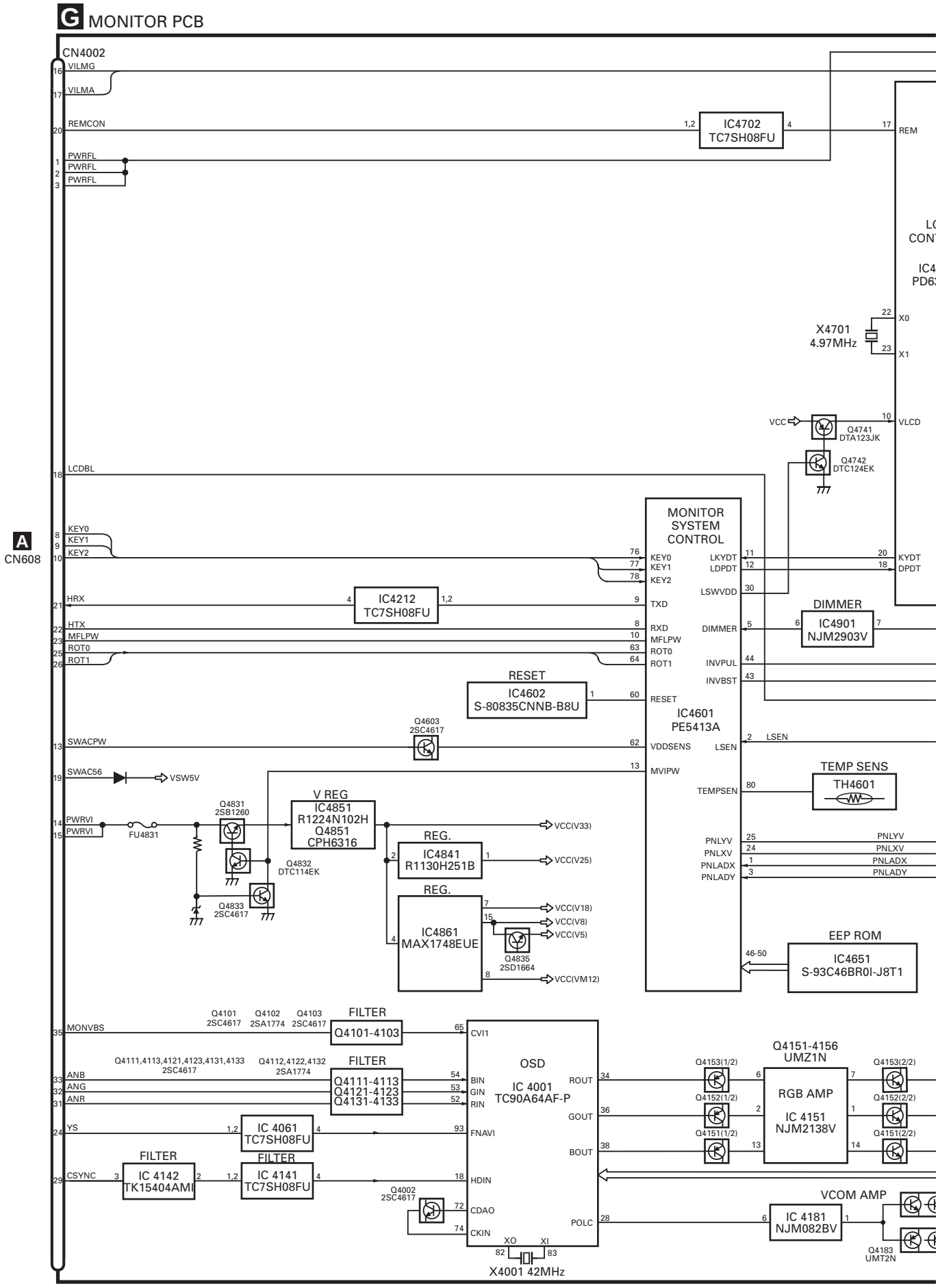
G MONITOR PCB
CN4002
VILMG
VILMA
REMCON
PWRFL
PWRFL
PWRFL
IC4702
TC7SH08FU
REM
X4701
4.97MHz
X0
X1
VCC
Q4741
DTA123JK
VLCD
Q4742
DTC124EK
LCDBL
A
CN608
KEY0
KEY1
KEY2
MONITOR
SYSTEM
CONTROL
LKYDT
LDPDT
LSWVDD
KYDT
DPDT
HRX
IC4212
TC7SH08FU
TXD
HTX
RXD
MFLPW
ROT0
ROT1
DIMMER
IC4901
NJM2903V
INVPUL
INVBST
RESET
IC4602
S-80835CNNB-B8U
RESET
IC4601
PE5413A
Q4603
2SC4617
SWACPW
VDDSENS
LSEN
SWAC56
VSW5V
MVIPW
TEMP SENS
TH4601
TEMPSEN
PWRVI
PWRVI
FU4831
Q4831
2SB1260
V REG
IC4851
R1224N102H
Q4851
CPH6316
VCC(V33)
Q4832
DTC114EK
REG.
IC4841
R1130H251B
VCC(V25)
Q4833
2SC4617
REG.
IC4861
MAX1748EUE
VCC(V18)
VCC(V8)
VCC(V5)
Q4835
2SD1664
VCC(VM12)
PNLYV
PNLXV
PNLADX
PNLADY
EEP ROM
IC4651
S-93C46BR0I-J8T1
MONVBS
Q4101
2SC4617
Q4102
2SA1774
Q4103
2SC4617
FILTER
Q4101-4103
Q4111,4113,4121,4123,4131,4133
2SC4617
Q4112,4122,4132
2SA1774
FILTER
Q4111-4113
Q4121-4123
Q4131-4133
ANB
ANG
ANR
YS
IC 4061
TC7SH08FU
CSYNC
FILTER
IC 4142
TK15404AMI
FILTER
IC 4141
TC7SH08FU
Q4002
2SC4617
OSD
IC 4001
TC90A64AF-P
CVI1
BIN
GIN
RIN
FNAVI
HDIN
CDAO
CKIN
ROUT
GOUT
BOUT
POLC
XO
XI
X4001 42MHz
Q4151-4156
UMZ1N
Q4153(1/2)
Q4152(1/2)
Q4151(1/2)
RGB AMP
IC 4151
NJM2138V
Q4153(2/2)
Q4152(2/2)
Q4151(2/2)
VCOM AMP
IC 4181
NJM082BV
Q4183
UMT2N

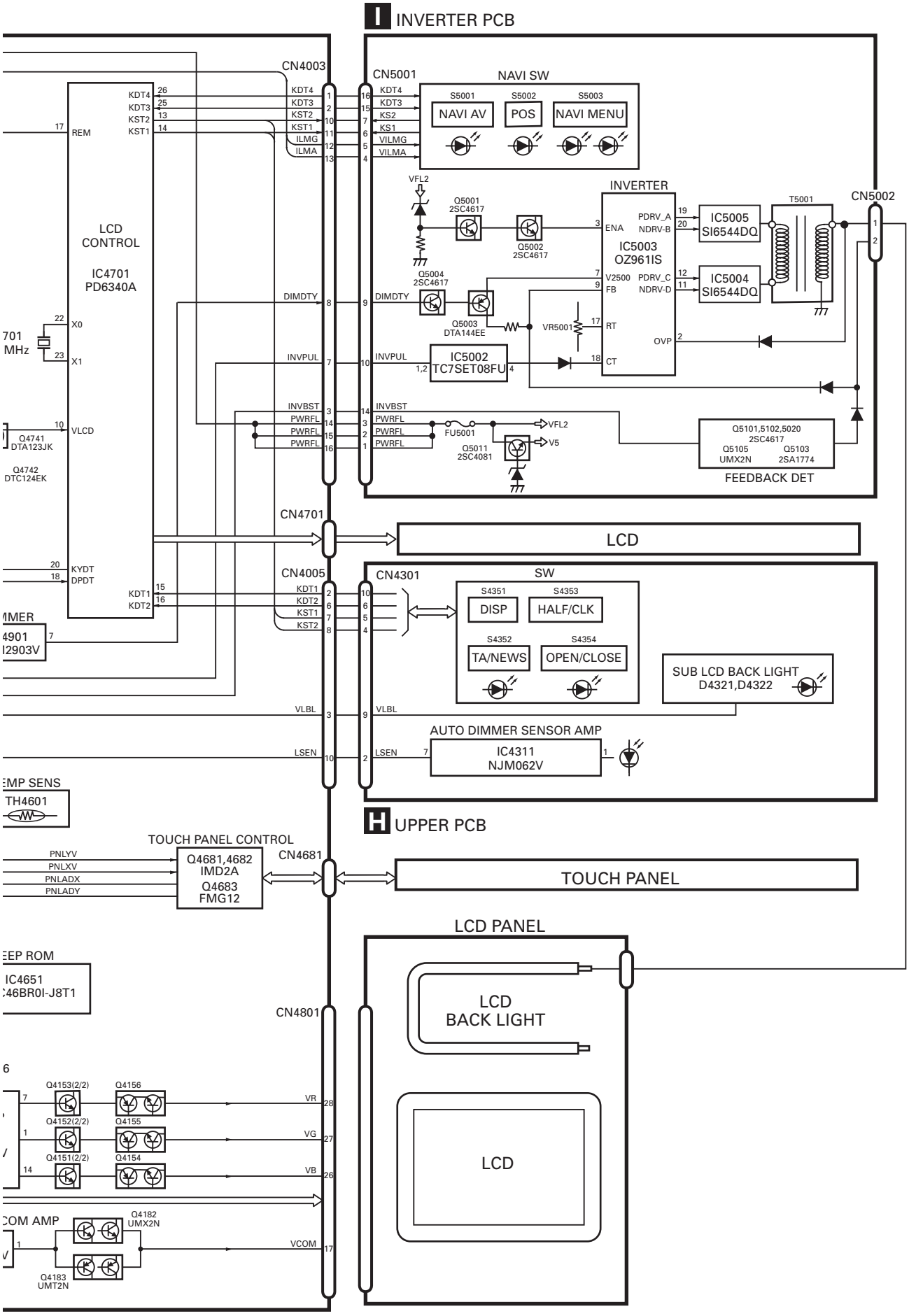
I INVERTER PCB
CN4003
CN5001
NAVI SW
S5001
S5002
S5003
NAVI AV
POS
NAVI MENU
KDT4
KDT3
KST2
KST1
ILMG
ILMA
KS2
KS1
VILMG
VILMA
REM
LCD CONTROL
IC4701
PD6340A
X0
X1
VLCD
KYDT
DPDT
DIMDTY
INVPUL
INVBST
PWRFL
VFL2
Q5001
2SC4617
Q5002
2SC4617
Q5004
2SC4617
Q5003
DTA144EE
INVERTER
ENA
IC5003
OZ961IS
V2500
FB
RT
CT
OVP
PDRV_A
NDRV-B
PDRV_C
NDRV-D
IC5005
SI6544DQ
IC5004
SI6544DQ
T5001
CN5002
VR5001
IC5002
TC7SET08FU
FU5001
Q5011
2SC4081
V5
Q5101,5102,5020
2SC4617
Q5105
UMX2N
Q5103
2SA1774
FEEDBACK DET
Q4741
DTA123JK
Q4742
DTC124EK
CN4701
LCD
CN4005
CN4301
SW
S4351
S4353
DISP
HALF/CLK
S4352
S4354
TA/NEWS
OPEN/CLOSE
SUB LCD BACK LIGHT
D4321,D4322
VLBL
LSEN
AUTO DIMMER SENSOR AMP
IC4311
NJM062V
TH4601
H UPPER PCB
TOUCH PANEL CONTROL
PNLYV
PNLXV
PNLADX
PNLADY
Q4681,4682
IMD2A
Q4683
FMG12
CN4681
TOUCH PANEL
LCD PANEL
IC4651
CN4801
LCD
BACK LIGHT
LCD
Q4153(2/2)
Q4156
Q4152(2/2)
Q4155
Q4151(2/2)
Q4154
VR
VG
VB
Q4182
UMX2N
Q4183
UMT2N
VCOM

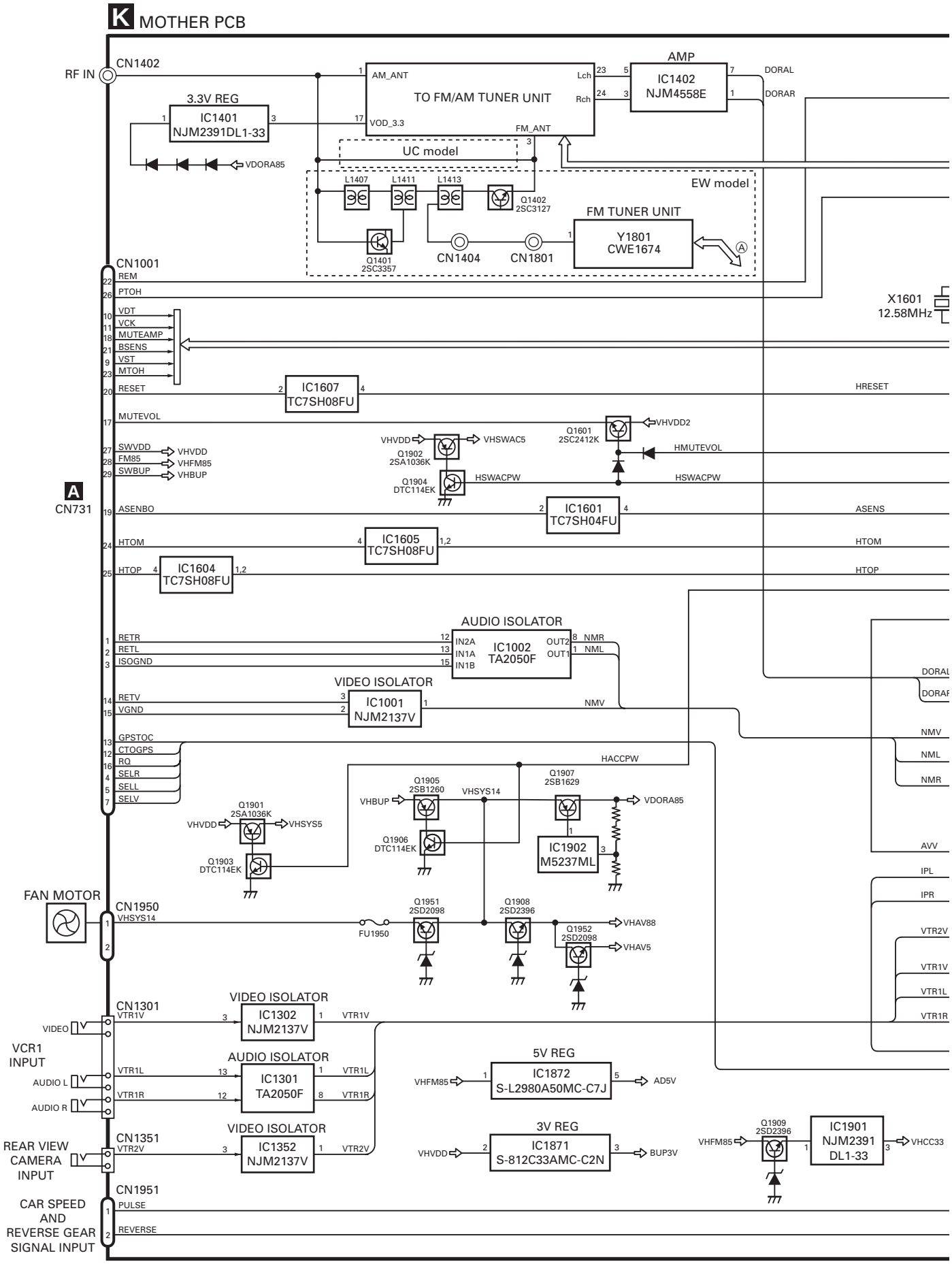
K MOTHER PCB
RF IN
CN1402
3.3V REG
IC1401
NJM2391DL1-33
VDORA85
AM_ANT
TO FM/AM TUNER UNIT
VOD_3.3
FM_ANT
Lch
Rch
AMP
IC1402
NJM4558E
DORAL
DORAR
UC model
EW model
L1407
L1411
L1413
Q1402
2SC3127
Q1401
2SC3357
CN1404
CN1801
FM TUNER UNIT
Y1801
CWE1674
CN1001
REM
PTOH
VDT
VCK
MUTEAMP
BSENS
VST
MTOH
X1601
12.58MHz
RESET
IC1607
TC7SH08FU
HRESET
MUTEVOL
VHVDD2
Q1601
2SC2412K
HMUTEVOL
SWVDD
FM85
SWBUP
VHVDD
VHFM85
VHBUP
VHVDD
Q1902
2SA1036K
VHSWAC5
Q1904
DTC114EK
HSWACPW
HSWACPW
CN731
ASENBO
IC1601
TC7SH04FU
ASENS
HTOM
IC1605
TC7SH08FU
HTOM
HTOP
IC1604
TC7SH08FU
HTOP
AUDIO ISOLATOR
RETR
RETL
ISOGND
IN2A
IN1A
IN1B
IC1002
TA2050F
OUT2
OUT1
NMR
NML
VIDEO ISOLATOR
RETV
VGND
IC1001
NJM2137V
NMV
DORAL
DORAR
NMV
NML
NMR
GPSTOC
CTOGPS
RQ
SELR
SELL
SELV
HACCPW
Q1905
2SB1260
VHSYS14
Q1907
2SB1629
VHBUP
VDORA85
Q1901
2SA1036K
VHVDD
VHSYS5
Q1906
DTC114EK
IC1902
M5237ML
Q1903
DTC114EK
AVV
IPL
IPR
FAN MOTOR
CN1950
VHSYS14
FU1950
Q1951
2SD2098
Q1908
2SD2396
Q1952
2SD2098
VHAV88
VHAV5
VTR2V
VTR1V
VTR1L
VTR1R
CN1301
VTR1V
VIDEO
VIDEO ISOLATOR
IC1302
NJM2137V
VTR1V
VCR1
INPUT
AUDIO L
AUDIO R
VTR1L
VTR1R
AUDIO ISOLATOR
IC1301
TA2050F
VTR1L
VTR1R
5V REG
VHFM85
IC1872
S-L2980A50MC-C7J
AD5V
CN1351
VTR2V
REAR VIEW
CAMERA
INPUT
VIDEO ISOLATOR
IC1352
NJM2137V
VTR2V
3V REG
VHVDD
IC1871
S-812C33AMC-C2N
BUP3V
Q1909
2SD2396
VHFM85
IC1901
NJM2391
DL1-33
VHCC33
CN1951
CAR SPEED
AND
REVERSE GEAR
SIGNAL INPUT
PULSE
REVERSE

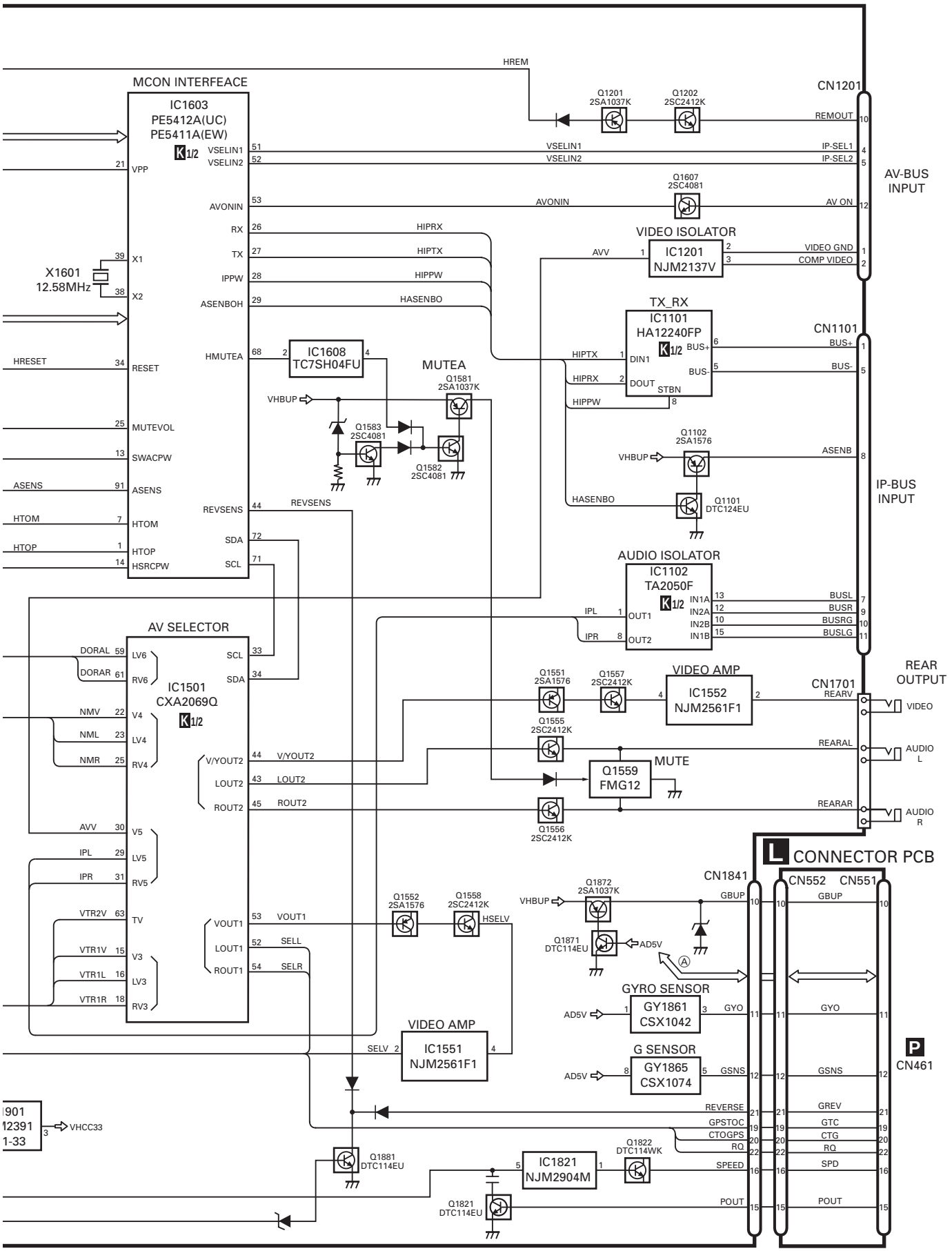
MCON INTERFEACE
IC1603
PE5412A(UC)
PE5411A(EW)
K 1/2
VSELIN1
VSELIN2
VPP
AVONIN
RX
TX
IPPW
ASENBOH
X1
X2
X1601
12.58MHz
HRESET
RESET
HMUTEA
MUTEVOL
SWACPW
ASENS
HTOM
HTOP
HSRCPW
REVSENS
SDA
SCL
HREM
Q1201
2SA1037K
Q1202
2SC2412K
CN1201
REMOUT
IP-SEL1
IP-SEL2
AV ON
AV-BUS
INPUT
Q1607
2SC4081
VIDEO ISOLATOR
IC1201
NJM2137V
AVV
VIDEO GND
COMP VIDEO
HIPRX
HIPTX
HIPPW
HASENBO
TX_RX
IC1101
HA12240FP
DIN1
DOUT
STBN
BUS+
BUS-
CN1101
IC1608
TC7SH04FU
MUTEA
Q1581
2SA1037K
VHBUP
Q1583
2SC4081
Q1582
2SC4081
Q1102
2SA1576
ASENB
Q1101
DTC124EU
IP-BUS
INPUT
AUDIO ISOLATOR
IC1102
TA2050F
IN1A
IN2A
IN2B
IN1B
OUT1
OUT2
IPL
IPR
BUSL
BUSR
BUSRG
BUSLG
AV SELECTOR
IC1501
CXA2069Q
DORAL
DORAR
NMV
NML
NMR
LV6
RV6
V4
LV4
RV4
V5
LV5
RV5
TV
V3
LV3
RV3
V/YOUT2
LOUT2
ROUT2
VOUT1
LOUT1
ROUT1
VTR2V
VTR1V
VTR1L
VTR1R
Q1551
2SA1576
Q1557
2SC2412K
VIDEO AMP
IC1552
NJM2561F1
CN1701
REAR
OUTPUT
REARV
REARAL
REARAR
VIDEO
AUDIO
L
AUDIO
R
Q1555
2SC2412K
Q1559
FMG12
MUTE
Q1556
2SC2412K
CONNECTOR PCB
CN1841
CN552
CN551
CN461
Q1872
2SA1037K
GBUP
Q1871
DTC114EU
AD5V
Q1552
2SA1576
Q1558
2SC2412K
HSELV
VIDEO AMP
IC1551
NJM2561F1
SELV
GYRO SENSOR
GY1861
CSX1042
GYO
G SENSOR
GY1865
CSX1074
GSNS
REVERSE
GPSTOC
CTOGPS
RQ
SPEED
POUT
GREV
GTC
CTG
SPD
VHCC33
Q1881
DTC114EU
IC1821
NJM2904M
Q1822
DTC114WK
Q1821
DTC114EU

FM/AM TUNER UNIT (UC)

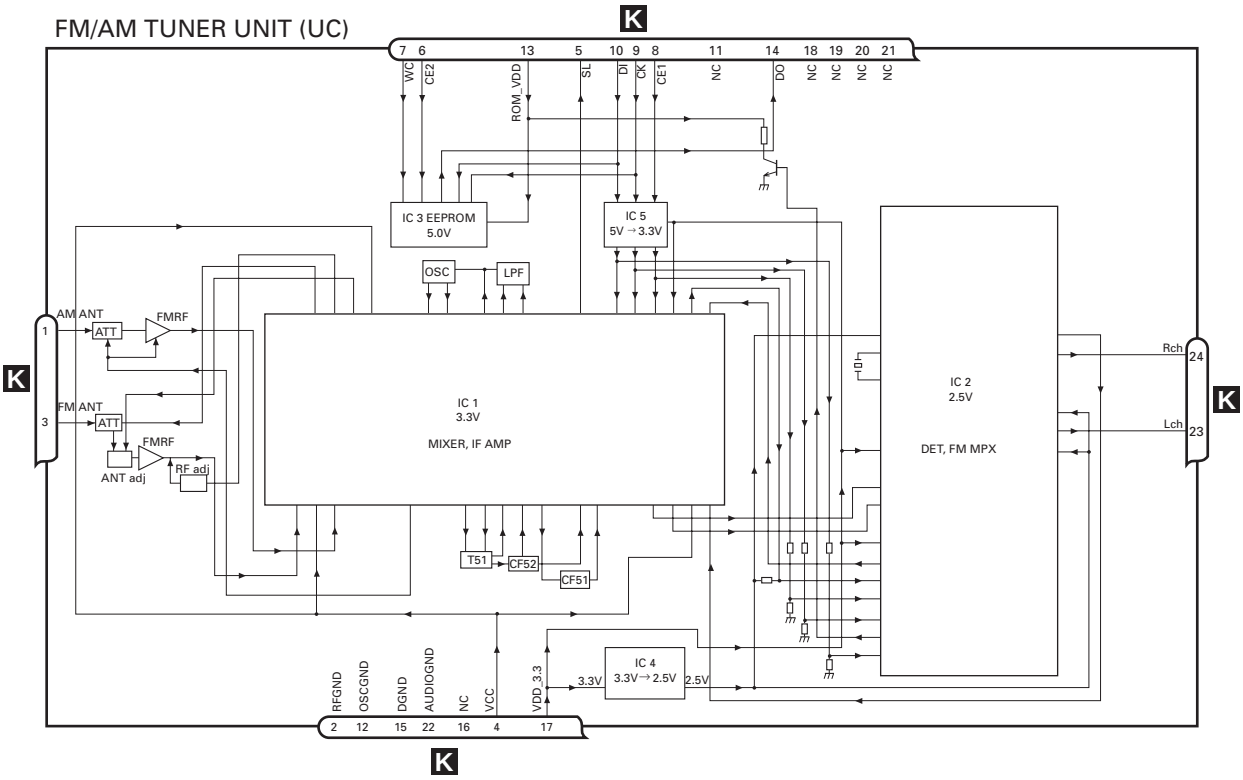

FM/AM TUNER UNIT (EW)

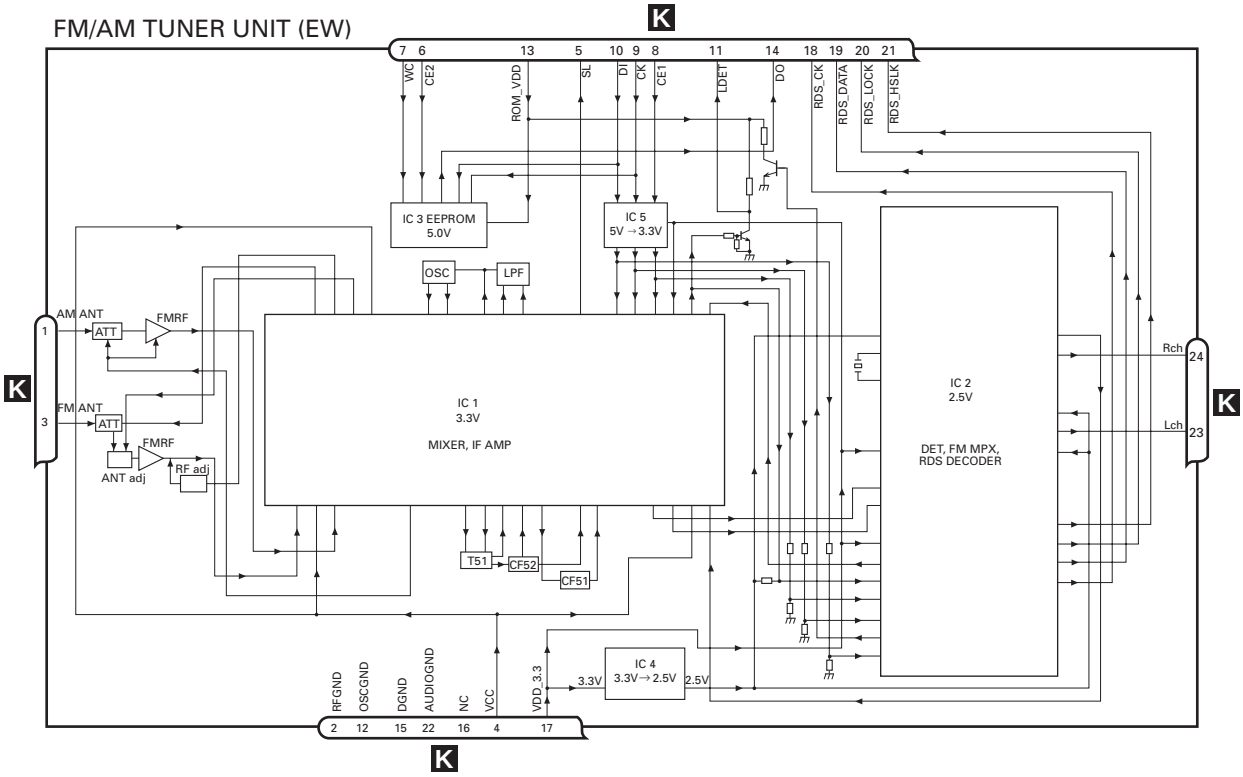

P GPS UNIT

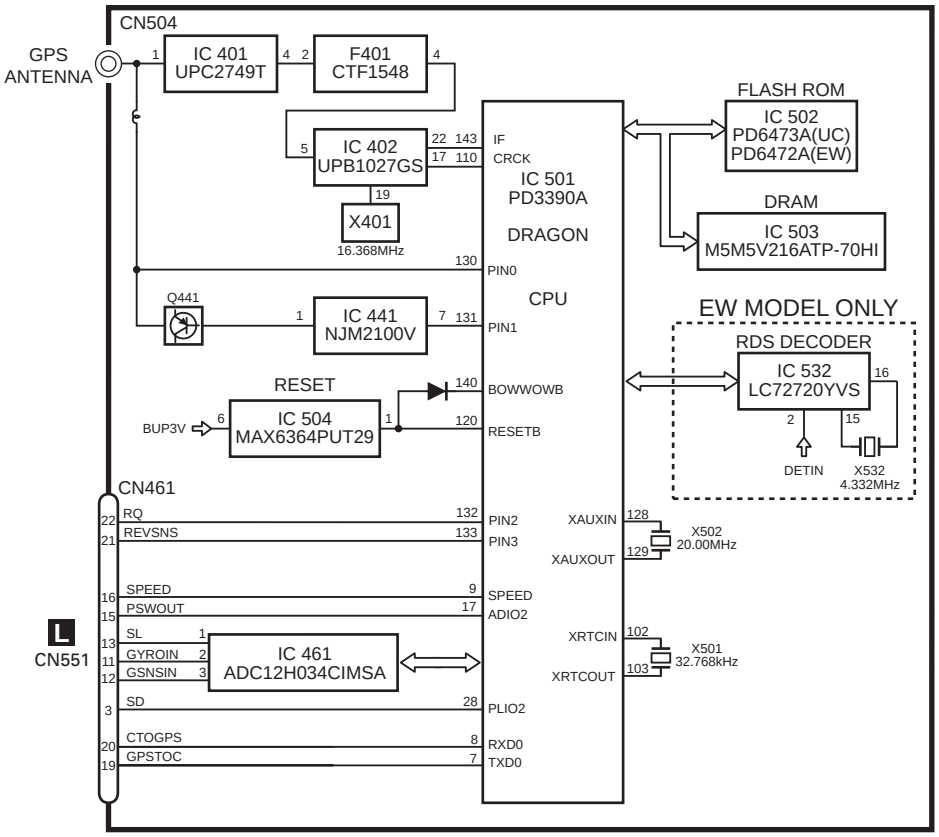

M MAIN UNIT

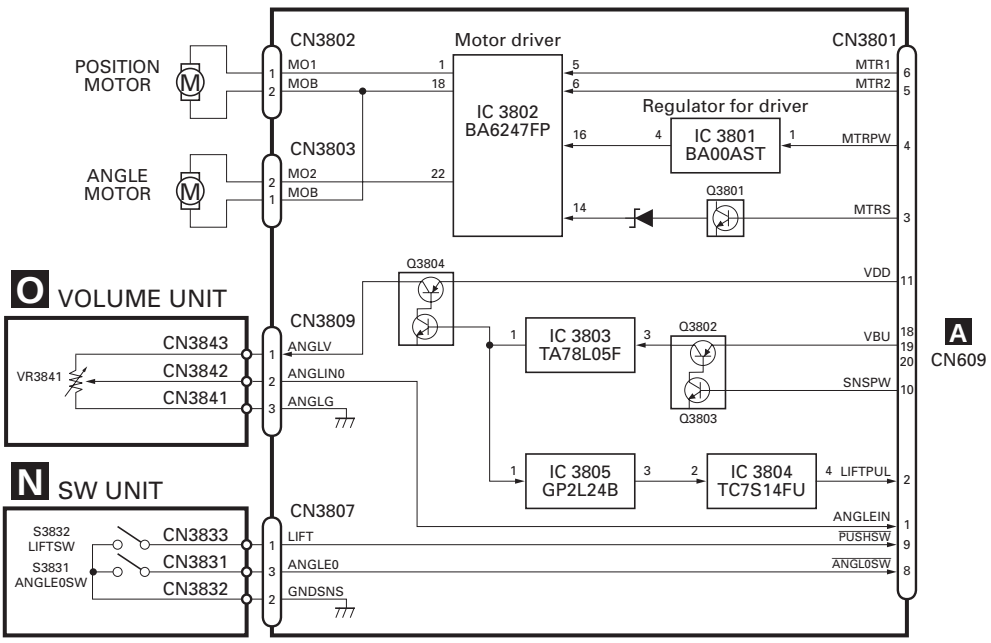

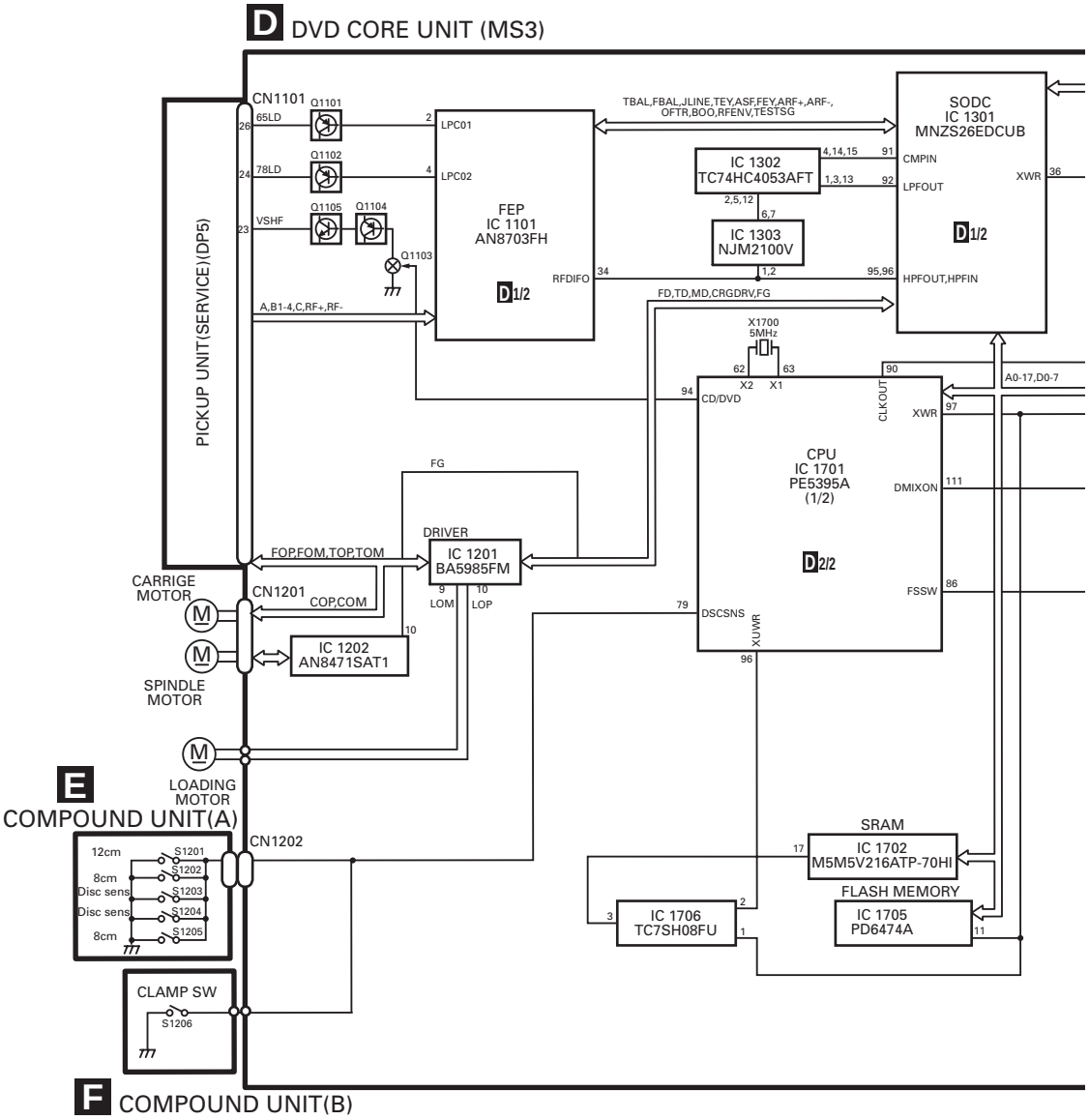
D DVD CORE UNIT (MS3)
PICKUP UNIT(SERVICE)(DP5)
CN1101
65LD
78LD
VSHF
Q1101
Q1102
Q1105
Q1104
Q1103
A,B1-4,C,RF+,RF-
LPC01
LPC02
FEP
IC 1101
AN8703FH
D1/2
RFDIFO
TBAL,FBAL,JLINE,TEY,ASF,FEY,ARF+,ARF-,
OFTR,BOO,RFENV,TESTSG
IC 1302
TC74HC4053AFT
IC 1303
NJM2100V
SODC
IC 1301
MNZS26EDCUB
CMPIN
LPFOUT
XWR
HPFOUT,HPFIN
FD,TD,MD,CRGDRV,FG
X1700
5MHz
X2
X1
CD/DVD
CLKOUT
A0-17,D0-7
CPU
IC 1701
PE5395A
(1/2)
D2/2
DMIXON
FSSW
DSCSNS
XUWR
FG
DRIVER
IC 1201
BA5985FM
LOM
LOP
FOP,FOM,TOP,TOM
CN1201
COP,COM
IC 1202
AN8471SAT1
CARRIGE
MOTOR
SPINDLE
MOTOR
LOADING
MOTOR
E
COMPOUND UNIT(A)
CN1202
12cm
8cm
Disc sens
Disc sens
8cm
S1201
S1202
S1203
S1204
S1205
CLAMP SW
S1206
SRAM
IC 1702
M5M5V216ATP-70HI
FLASH MEMORY
IC 1705
PD6474A
IC 1706
TC7SH08FU
F COMPOUND UNIT(B)

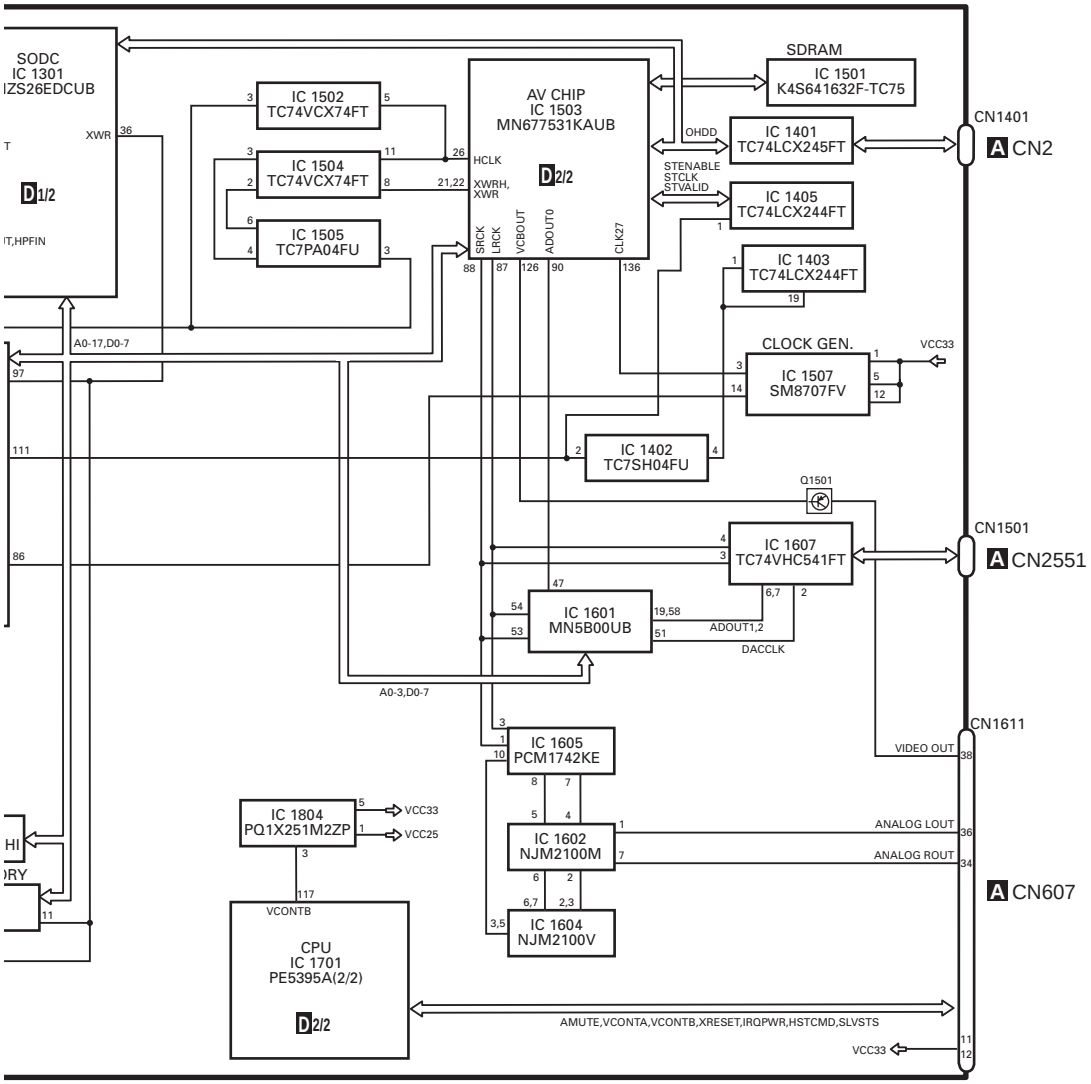
SODC
IC 1301
IZS26EDCUB
XWR
D 1/2
IT,HPFIN
IC 1502
TC74VCX74FT
IC 1504
TC74VCX74FT
IC 1505
TC7PA04FU
AV CHIP
IC 1503
MN677531KAUB
HCLK
XWRH,
XWR
D 2/2
SRCK
LRCK
VCBOUT
ADOUT0
CLKZ7
SDRAM
IC 1501
K4S641632F-TC75
OHDD
IC 1401
TC74LCX245FT
STENABLE
STCLK
STVALID
IC 1405
TC74LCX244FT
IC 1403
TC74LCX244FT
CN1401
A CN2
A0-17,D0-7
CLOCK GEN.
VCC33
IC 1507
SM8707FV
IC 1402
TC7SH04FU
Q1501
IC 1607
TC74VHC541FT
CN1501
A CN2551
IC 1601
MN5B00UB
ADOUT1,2
DACCLK
A0-3,D0-7
IC 1605
PCM1742KE
CN1611
VIDEO OUT
IC 1804
PQ1X251M2ZP
VCC25
IC 1602
NJM2100M
ANALOG LOUT
ANALOG ROUT
IC 1604
NJM2100V
A CN607
VCONTB
CPU
IC 1701
PE5395A(2/2)
D 2/2
AMUTE,VCONTA,VCONTB,XRESET,IRQPWR,HSTCMD,SLVSTS

● POWER SUPPLY SYSTEM FIGURE

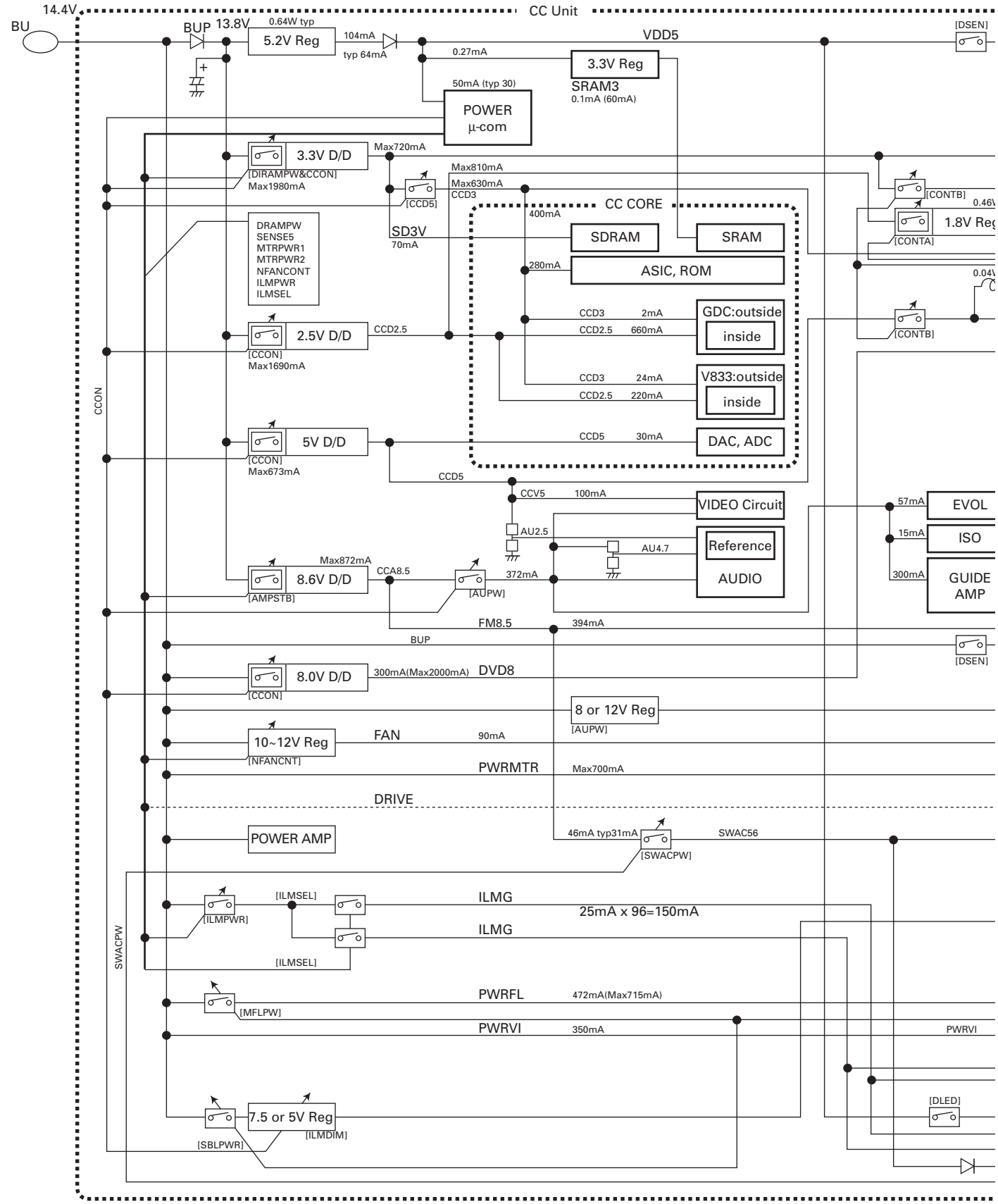

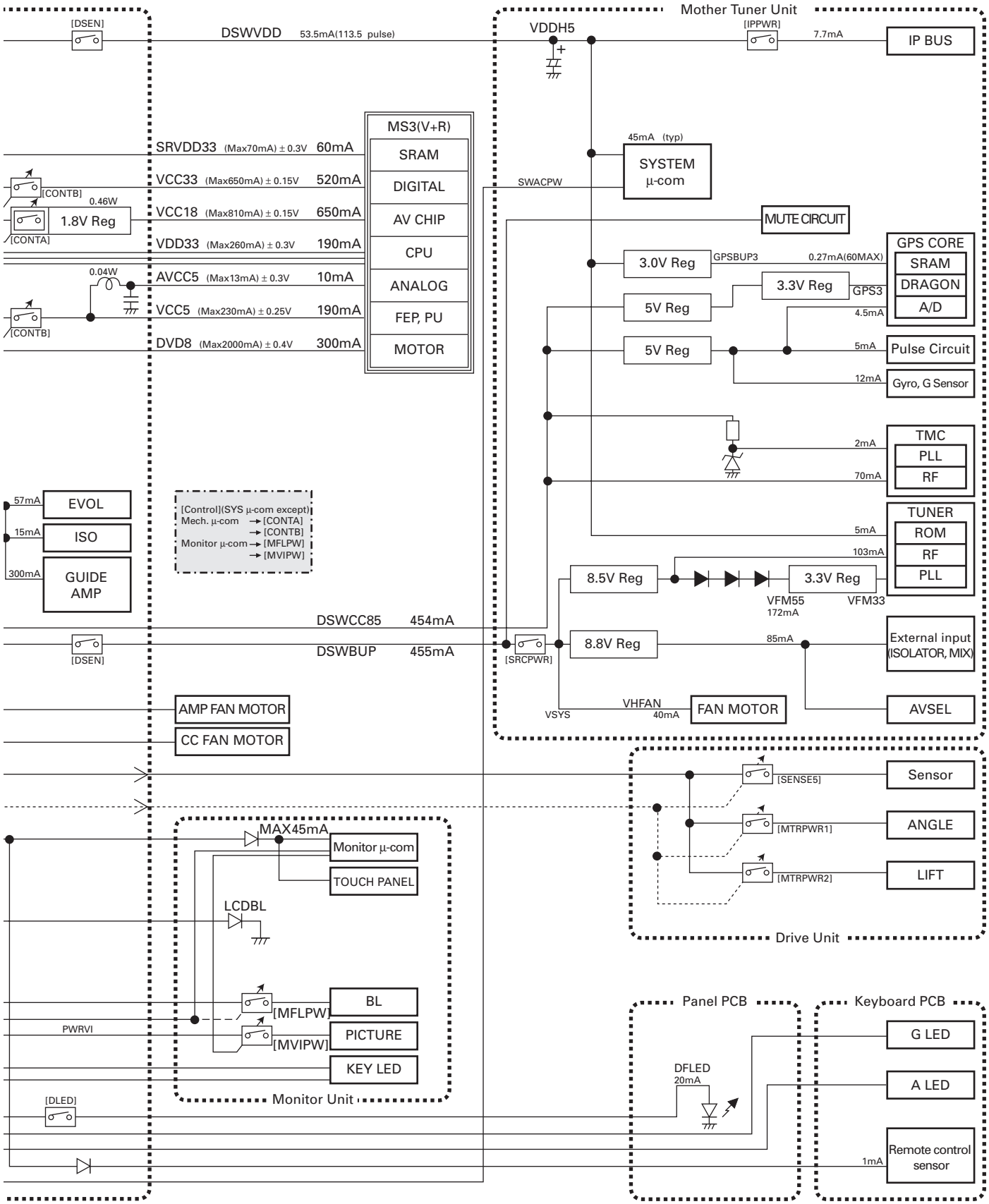
Mother Tuner Unit
[DSEN]
DSWVDD 53.5mA(113.5 pulse)
VDDH5
[IPPWR]
7.7mA
IP BUS
MS3(V+R)
SRAM
DIGITAL
AV CHIP
CPU
ANALOG
FEP, PU
MOTOR
SRVDD33 (Max70mA) ± 0.3V 60mA
VCC33 (Max650mA) ± 0.15V 520mA
VCC18 (Max810mA) ± 0.15V 650mA
VDD33 (Max260mA) ± 0.3V 190mA
AVCC5 (Max13mA) ± 0.3V 10mA
VCC5 (Max230mA) ± 0.25V 190mA
DVD8 (Max2000mA) ± 0.4V 300mA
[CONTB]
0.46W
1.8V Reg
[CONTA]
0.04W
[CONTB]
45mA (typ)
SYSTEM µ-com
SWACPW
MUTE CIRCUIT
3.0V Reg
GPSBUP3
0.27mA(60MAX)
GPS CORE
SRAM
DRAGON
A/D
3.3V Reg
GPS3
5V Reg
4.5mA
5V Reg
5mA
Pulse Circuit
12mA
Gyro, G Sensor
2mA
TMC
PLL
RF
70mA
TUNER
ROM
RF
PLL
5mA
103mA
8.5V Reg
3.3V Reg
VFM55
172mA
VFM33
57mA
EVOL
15mA
ISO
300mA
GUIDE AMP
[Control](SYS µ-com except)
Mech. µ-com → [CONTA]
→ [CONTB]
Monitor µ-com → [MFLPW]
→ [MVIPW]
DSWCC85 454mA
DSWBUP 455mA
[DSEN]
[SRCPWR]
8.8V Reg
85mA
External input (ISOLATOR, MIX)
VSYS
VHFAN
40mA
FAN MOTOR
AVSEL
AMP FAN MOTOR
CC FAN MOTOR
[SENSE5]
Sensor
[MTRPWR1]
ANGLE
[MTRPWR2]
LIFT
Drive Unit
MAX45mA
Monitor µ-com
TOUCH PANEL
LCDBL
BL
[MFLPW]
PWRVI
PICTURE
[MVIPW]
KEY LED
Monitor Unit
Panel PCB
Keyboard PCB
G LED
DFLED
20mA
A LED
[DLED]
Remote control sensor
1mA

3.2 OVERALL CONNECTION DIAGRAM

Note: When ordering service parts, be sure to refer to " EXPLODED VIEWS AND PARTS LIST" or "ELECTRICAL PARTS LIST".

NOTE :

- Symbol indicates a resistor.
  No differentiation is made between chip resistors and discrete resistors.
- Symbol indicates a capacitor.
  No differentiation is made between chip capacitors and discrete capacitors.

The ⚠ mark found on some component parts indicates the importance of the safety factor of the part. Therefore, when replacing, be sure to use parts of identical designation.

: The power supply is shown with the marked box.

Decimal points for resistor and capacitor fixed values are expressed as :
2.2→2R2
0.022→R022

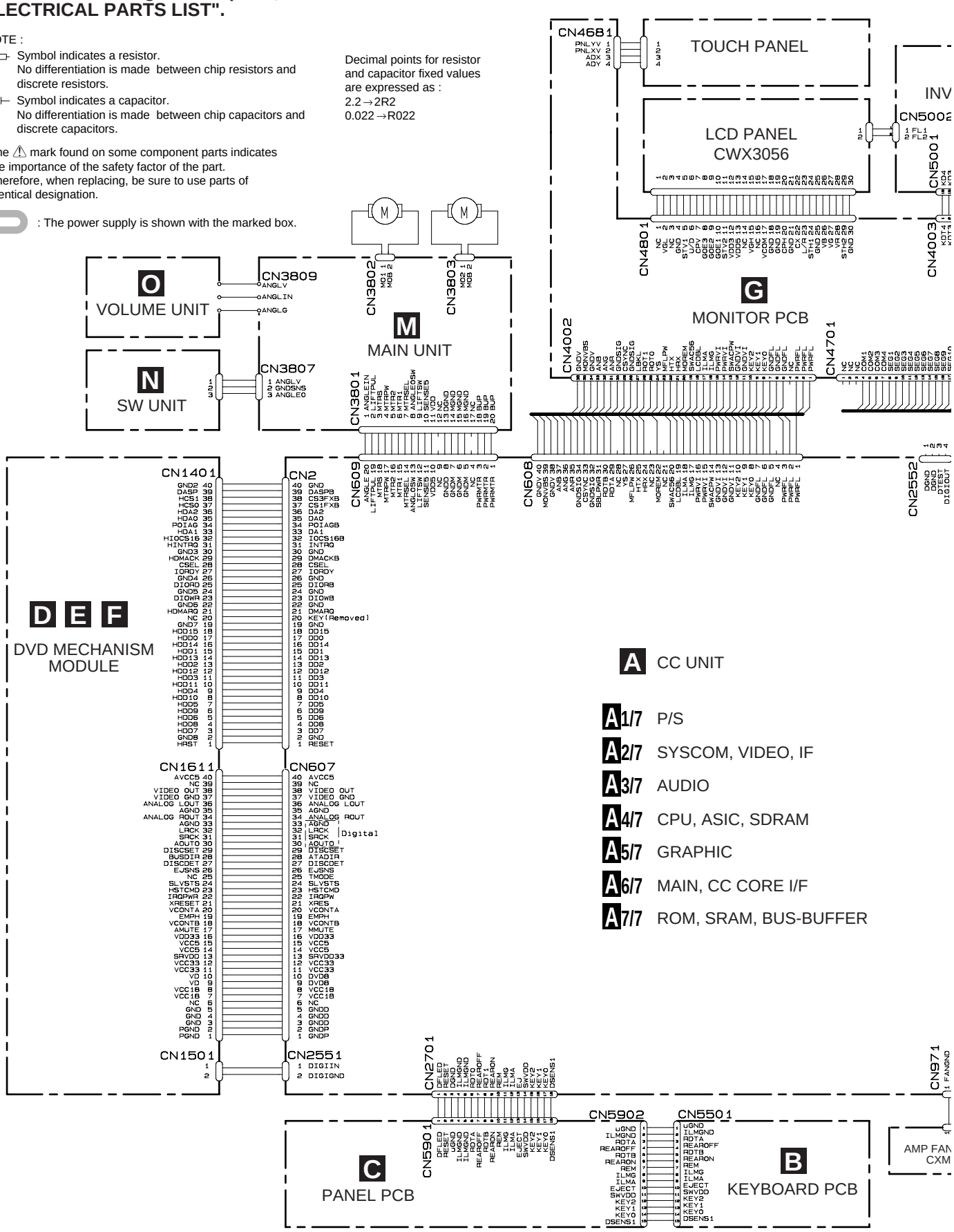

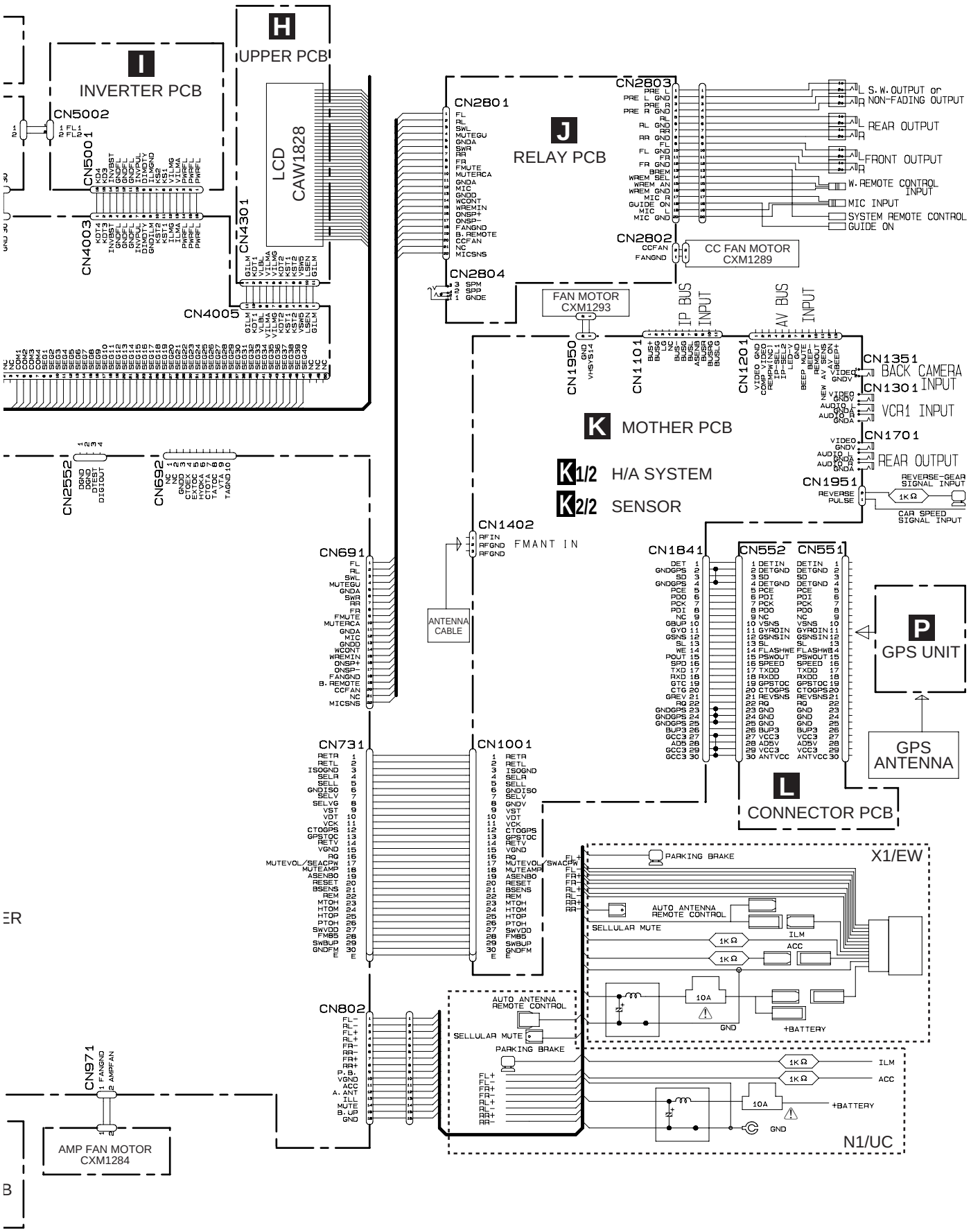
H
UPPER PCB
I
INVERTER PCB
CN5002
CN5001
CN4003
CN4301
LCD
CAW1828
CN4005
CN2801
J
RELAY PCB
CN2803
S.W. OUTPUT or NON-FADING OUTPUT
REAR OUTPUT
FRONT OUTPUT
W. REMOTE CONTROL INPUT
MIC INPUT
SYSTEM REMOTE CONTROL
GUIDE ON
CN2802
CC FAN MOTOR CXM1289
CN2804
FAN MOTOR CXM1293
IP BUS INPUT
AV BUS INPUT
CN1950
CN1101
CN1201
CN1351
BACK CAMERA INPUT
CN1301
VCR1 INPUT
CN1701
REAR OUTPUT
CN1951
REVERSE-GEAR SIGNAL INPUT
CAR SPEED SIGNAL INPUT
K MOTHER PCB
K1/2 H/A SYSTEM
K2/2 SENSOR
CN2552
CN692
CN1402
FMANT IN
ANTENNA CABLE
CN691
CN1841
CN552
CN551
P
GPS UNIT
GPS ANTENNA
L
CONNECTOR PCB
CN731
CN1001
X1/EW
PARKING BRAKE
AUTO ANTENNA REMOTE CONTROL
SELLULAR MUTE
ILM
ACC
+BATTERY
GND
CN802
CN971
AMP FAN MOTOR CXM1284
N1/UC

3.3 CC UNIT (P/S)(GUIDE PAGE)

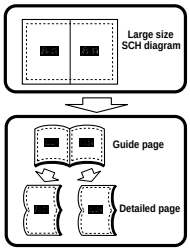

A-a 1/7

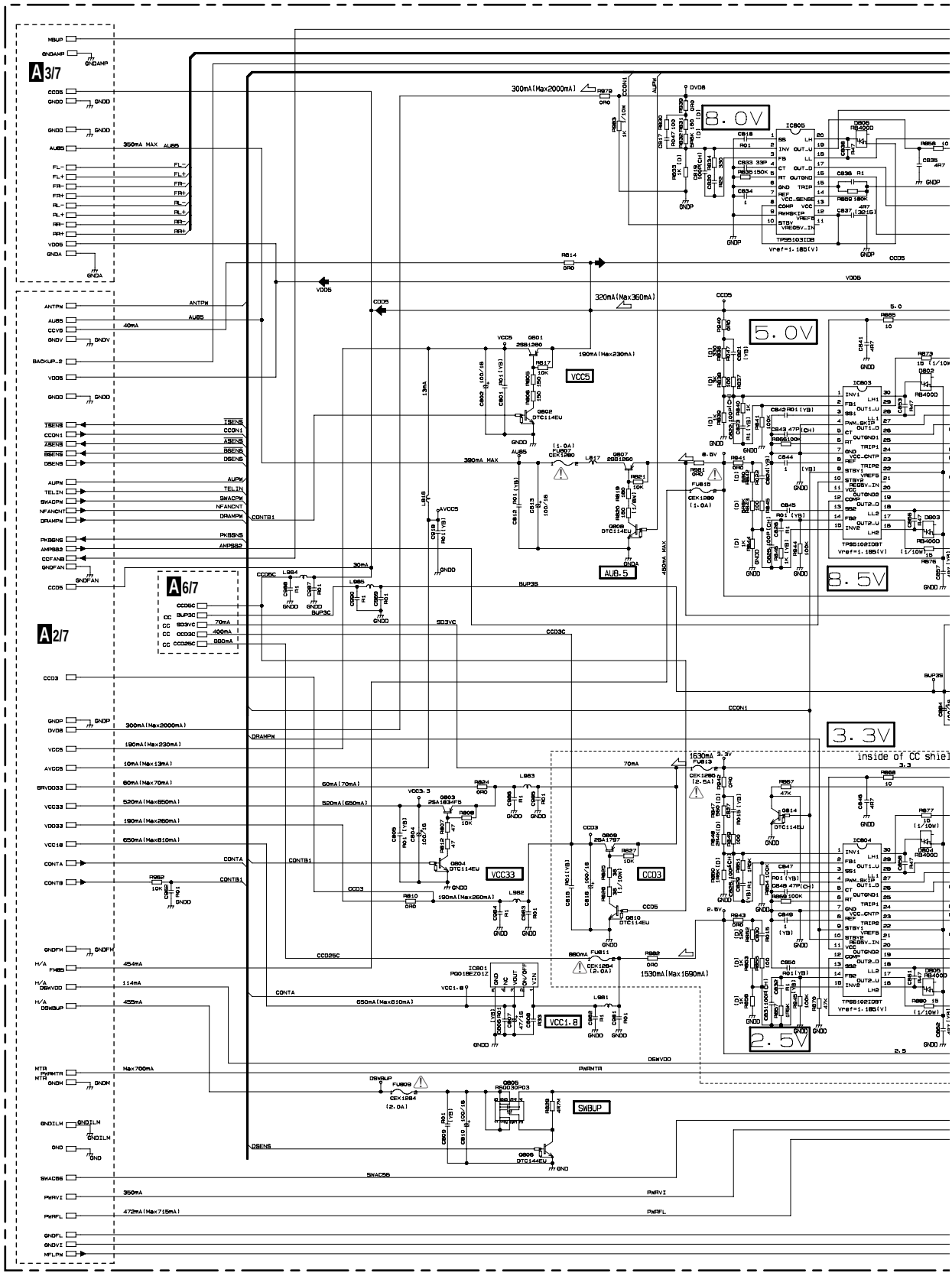

A 1/7

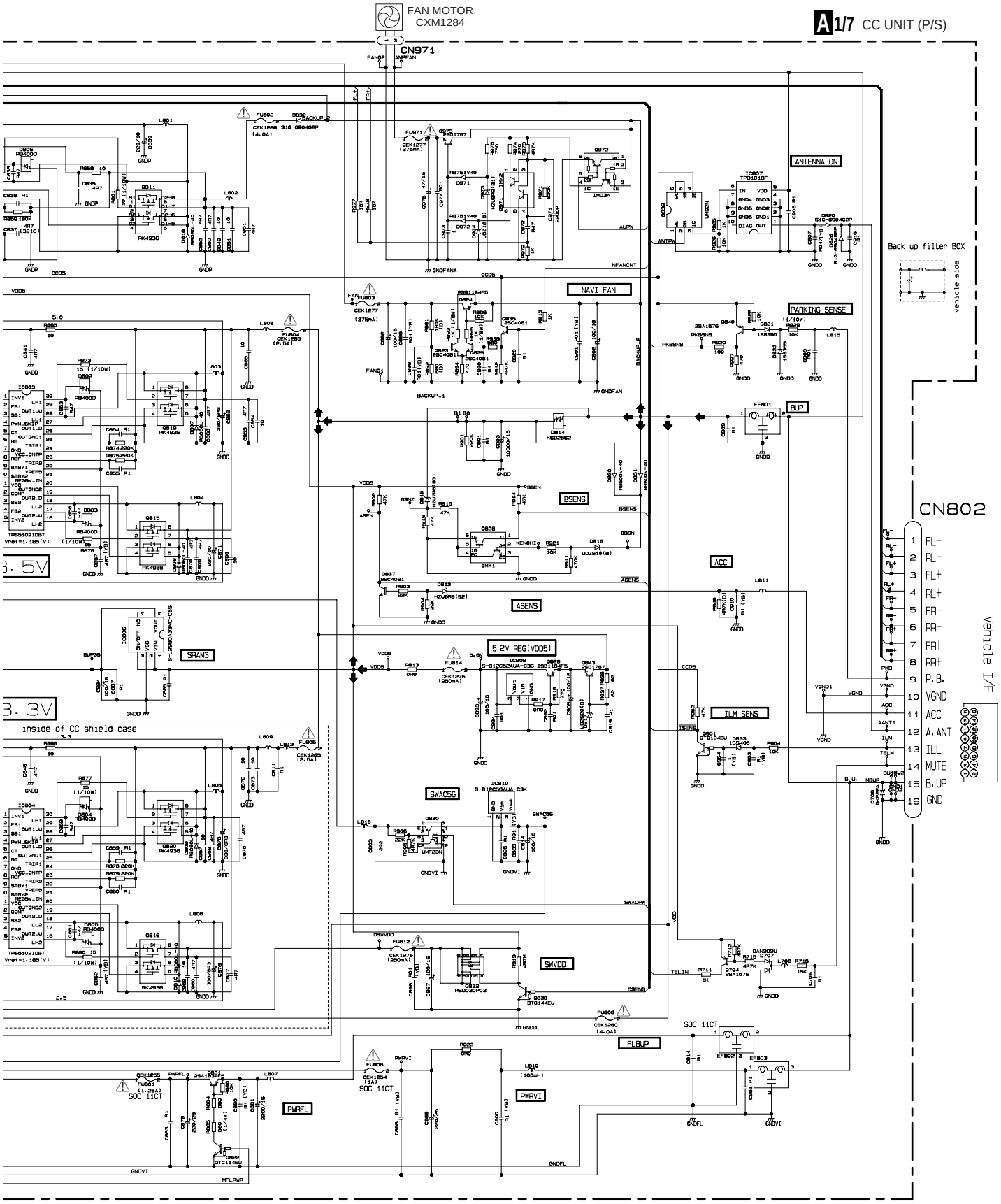
FAN MOTOR
CXM1284
CN971
A1/7 CC UNIT (P/S)
ANTENNA ON
Back up filter BOX
vehicle side
NAVI FAN
PARKING SENSE
BUP
BSENS
ACC
ASENS
SRAM3
5.2V REG(VDD5)
ILM SENS
SWAC56
SWVDD
FLBUP
PWRFL
PWRVI
CN802
Vehicle I/F
FL-
RL-
FL+
RL+
FR-
RR-
FR+
RR+
P.B.
VGND
ACC
A.ANT
ILL
MUTE
B.UP
GND
3.5V
3.3V
inside of CC shield case
SOC 11CT

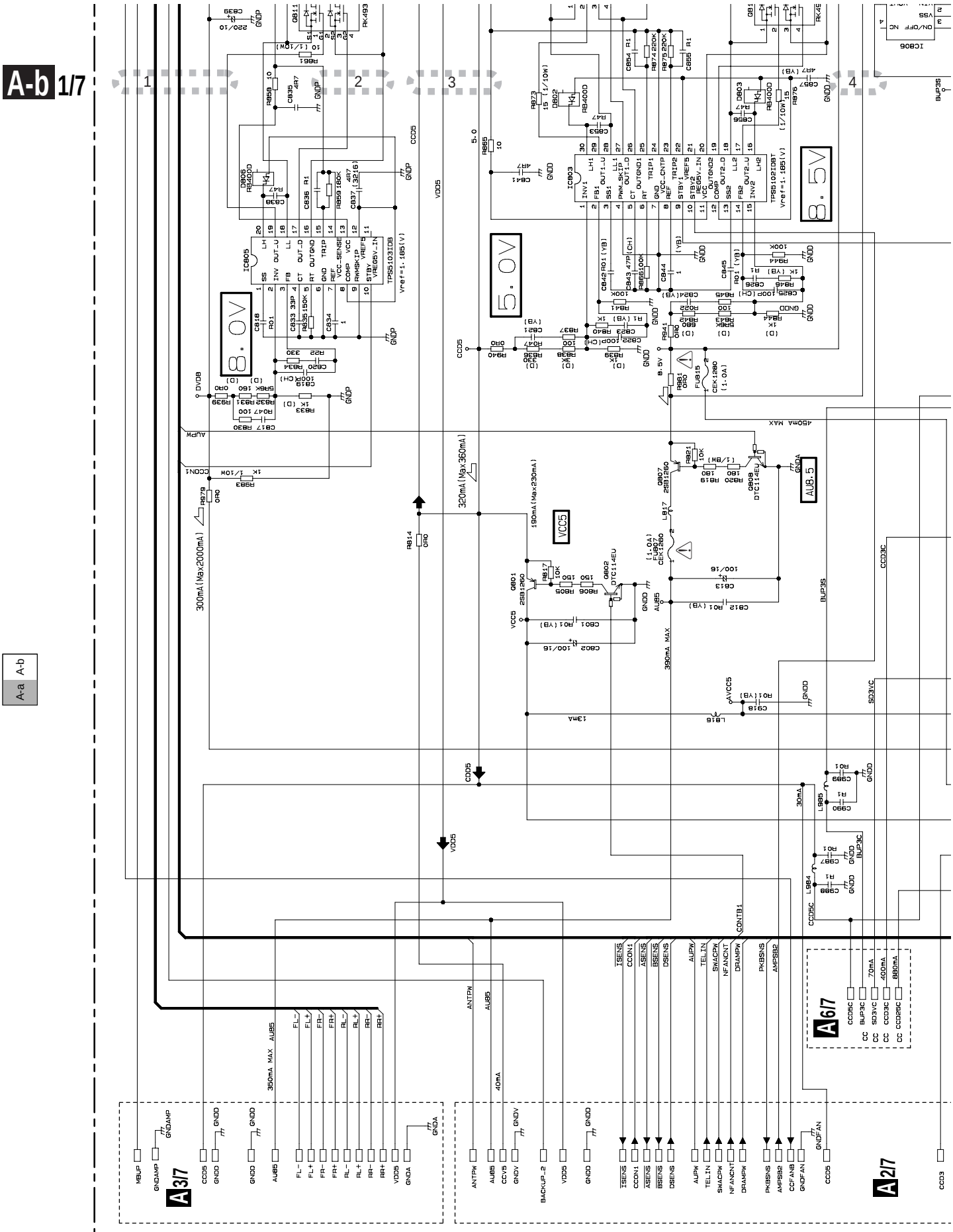
A-b 1/7
A-a 1/7
A-a
A-b
A3/7
A2/7
A6/7
IC805
TPS5103IDB
IC803
TPS5102IDBT
IC806
8.0V
5.0V
8.5V
VCC5
AUB.5
300mA(Max2000mA)
320mA(Max360mA)
190mA(Max230mA)
390mA MAX
450mA MAX
350mA MAX
13mA
30mA
40mA
70mA
400mA
890mA
MBUP
GNDAMP
CCD5
GNDD
GNDA
AUB5
FL-
FL+
FR-
FR+
RL-
RL+
RR-
RR+
VDD5
ANTPW
CCV5
GNDV
BACKUP_2
ISENS
CCON1
ASENS
BSENS
DSENS
AUPW
TEL_IN
SWACPW
NFANCNT
DRAMPW
PKBSNS
AMPSB2
CCFANB
GNDFAN
CCD3
CCD5C
BUP3C
SD3VC
CCD3C
CCD25C
CONTB1
BUP3S

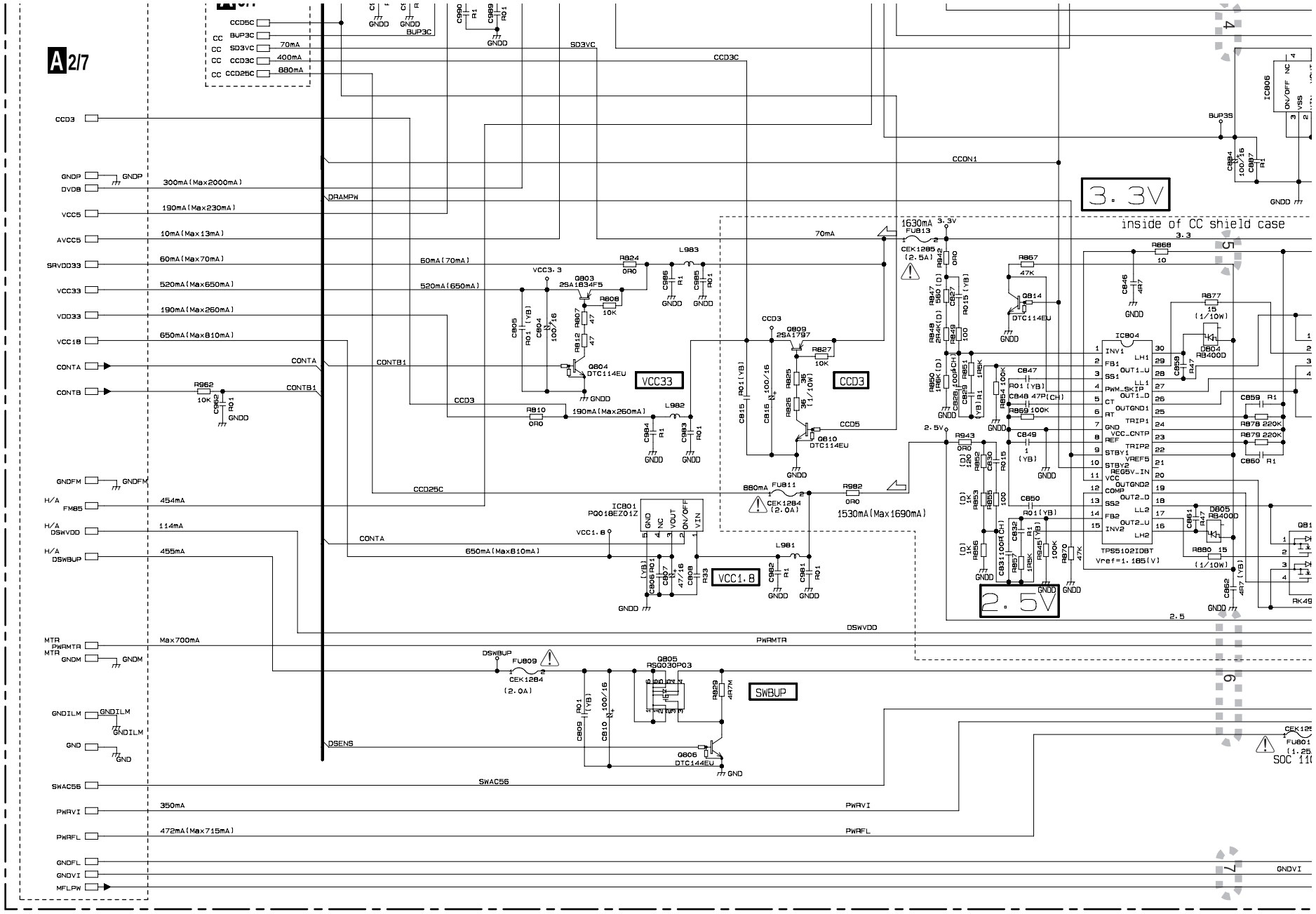
A 2/7
CCD5C
BUP3C
SD3VC
CCD3C
CCD25C
70mA
400mA
880mA
CCD3
GNDP
DVDD
VCC5
AVCC5
SRVDD33
VCC33
VDD33
VCC1.8
CONTA
CONTB
GNDFM
H/A FM85
H/A DSWVDD
H/A DSWBUP
MTR PWRMTR
MTR GNDM
GNDILM
GND
SWAC55
PWRVI
PWRFL
GNDFL
GNDVI
MFLPW
300mA(Max2000mA)
190mA(Max230mA)
10mA(Max13mA)
60mA(Max70mA)
520mA(Max650mA)
190mA(Max250mA)
650mA(Max810mA)
454mA
114mA
455mA
Max700mA
350mA
472mA(Max715mA)
DRAMPW
CONTB1
50mA(70mA)
520mA(650mA)
190mA(Max250mA)
650mA(Max810mA)
CCD25C
DSWVDD
PWRMTR
DSENS
SWAC55
PWRVI
PWRFL
GNDVI
VCC33
CCD3
VCC1.8
SWBUP
CCON1
BUP3S
3.3V
inside of CC shield case
1630mA
880mA
1530mA(Max1690mA)
2.5V
IC801
PQ018EZ01Z
IC804
TPS5102IDBT
Vref=1.185(V)
IC805
Q803
2SA1634F5
Q804
DTC114EU
Q809
2SA1797
Q810
DTC114EU
Q814
DTC114EU
Q805
RSQ030P03
Q806
DTC144EU
D604
RB400D
D605
RB400D
FU809
CEK1284
(2.0A)
FU811
CEK1284
(2.0A)
FU813
CEK1285
(2.5A)
FU801
(1.25
SOC 110
A-a 1/7
A-b 1/7

A 1/7 CC UNIT (P/S)

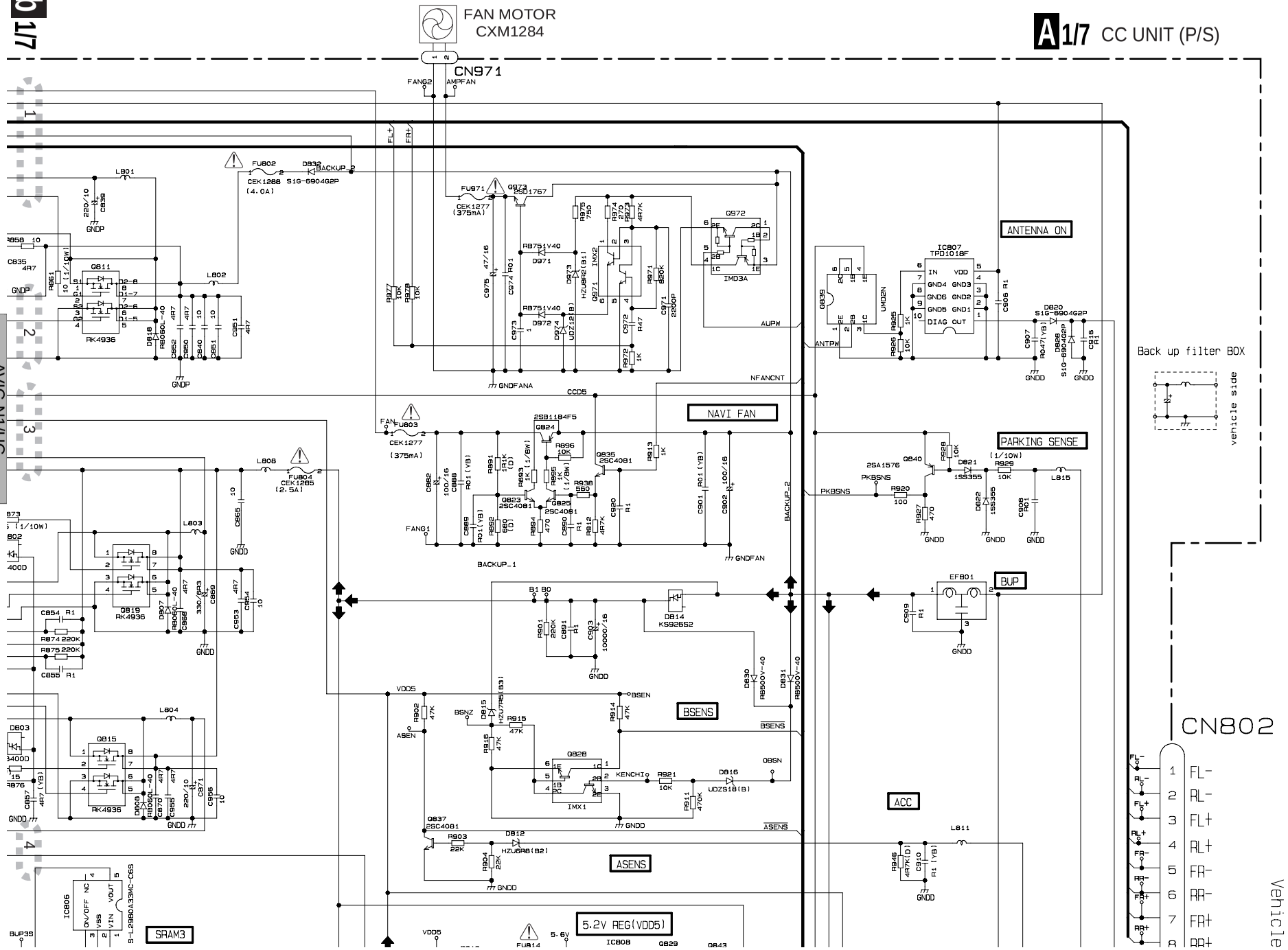

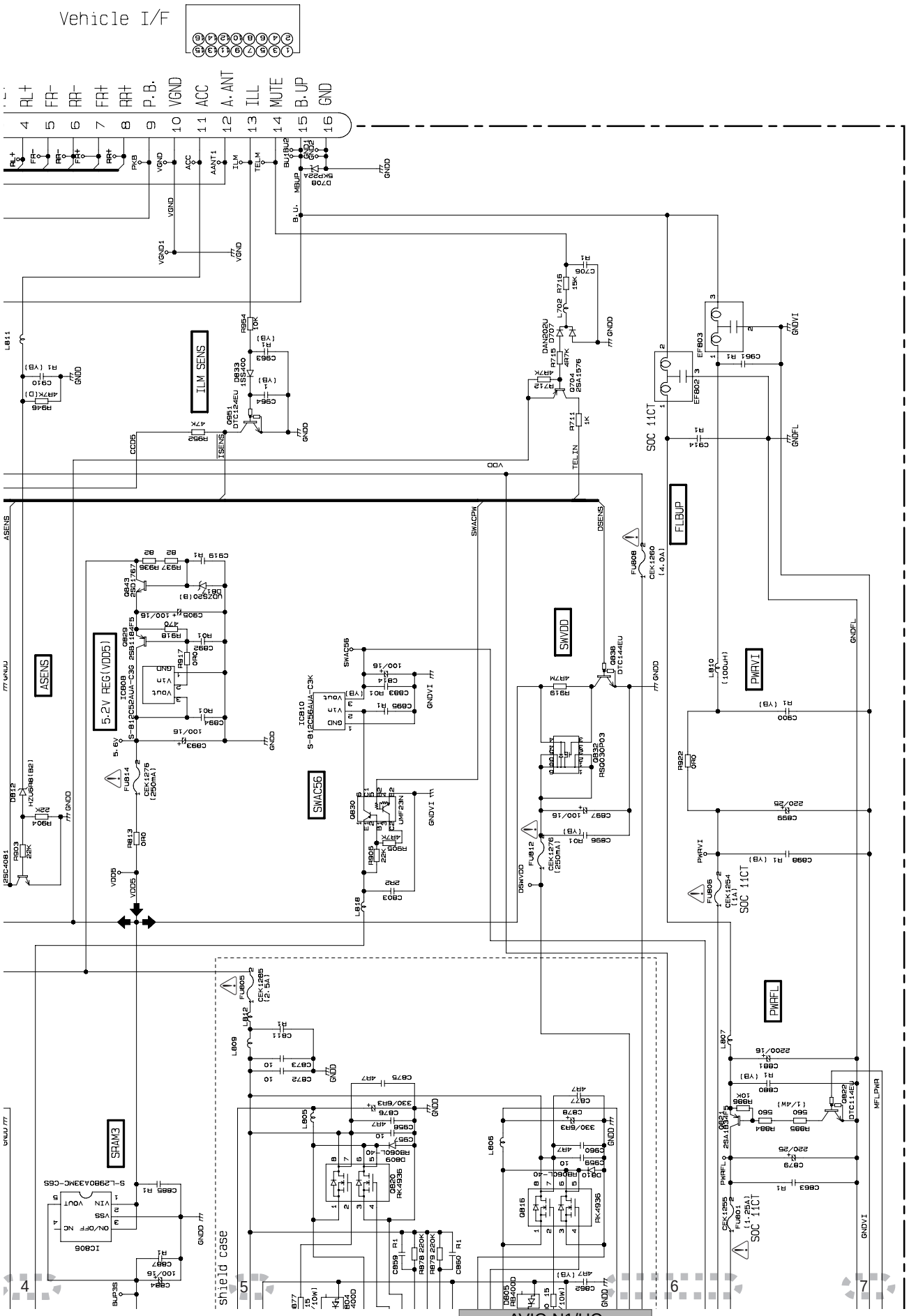
Vehicle I/F
RL+
FR-
RR-
FR+
RR+
P.B.
VGND
ACC
A.ANT
ILL
MUTE
B.UP
GND
ILM SENS
ASENS
5.2V REG(VDD5)
SWAC56
SWVDD
FLBUP
PWRVI
PWRFL
SRAM3
Shield case
SOC 11CT
AVIC-N1/UC
A-b 1/7
47

3.4 CC UNIT (SYSCOM, VIDEO, IF)(GUIDE PAGE)

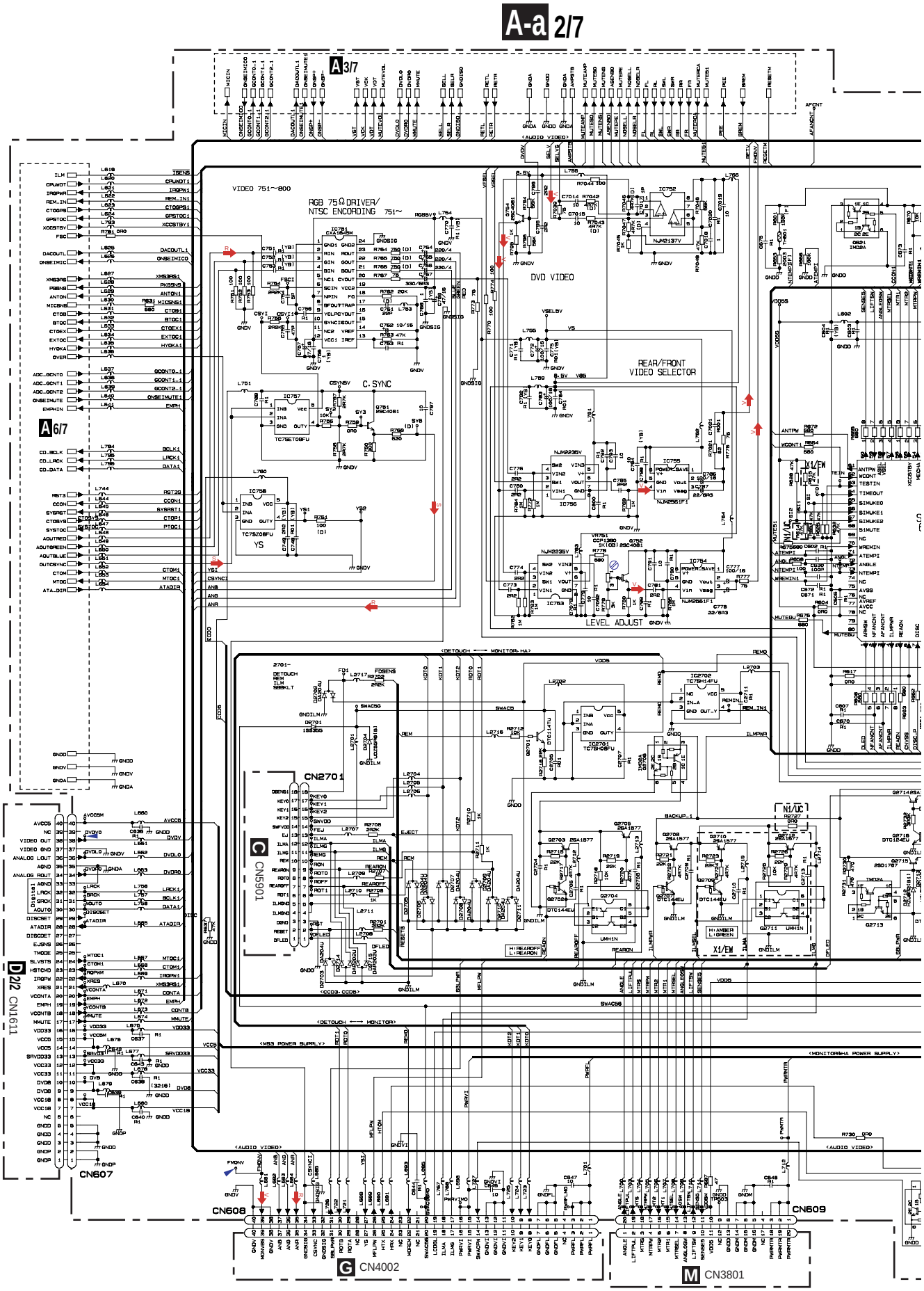

A 2/7

A2/7 CC UNIT (SYSCOM, VIDEO, IF)

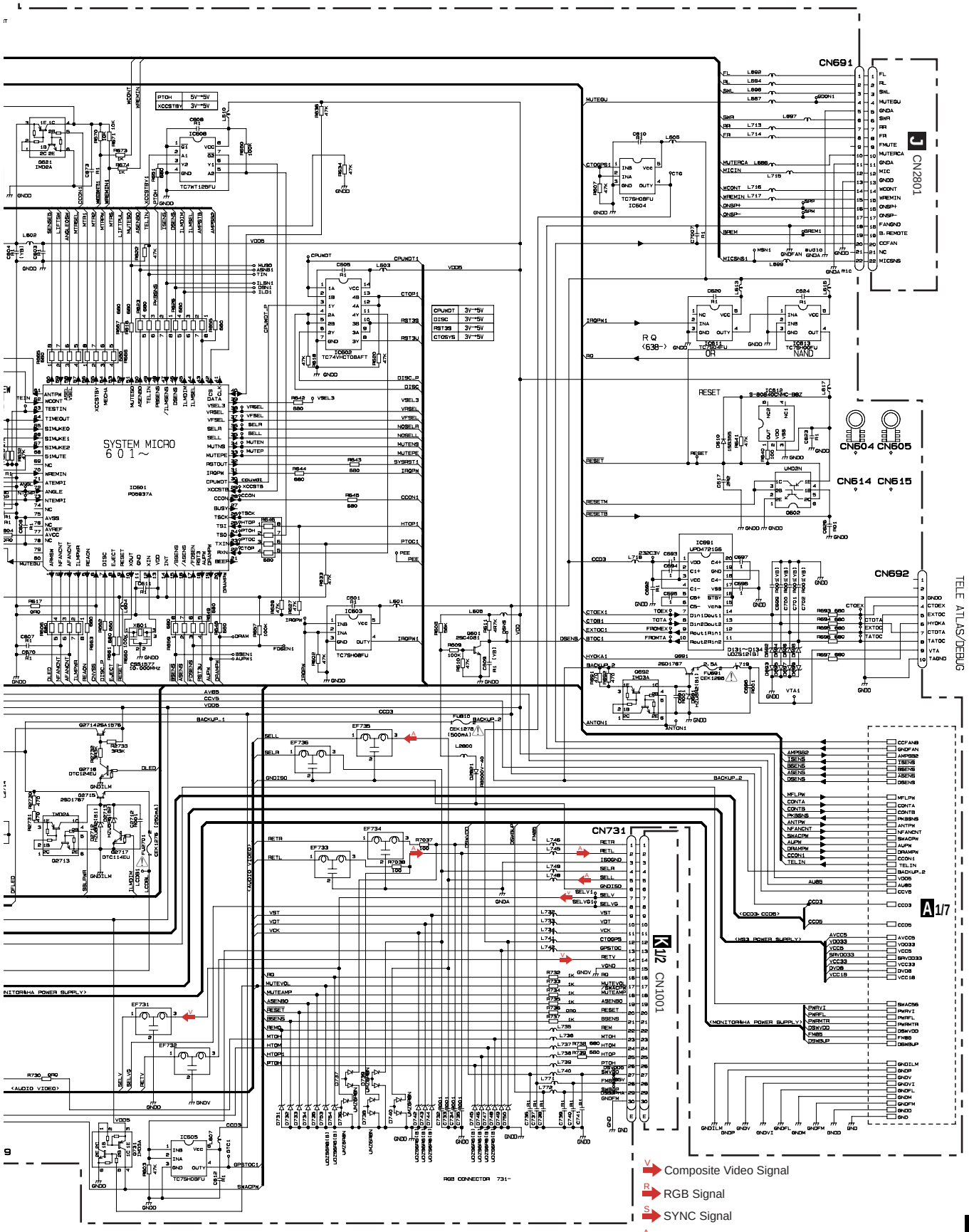

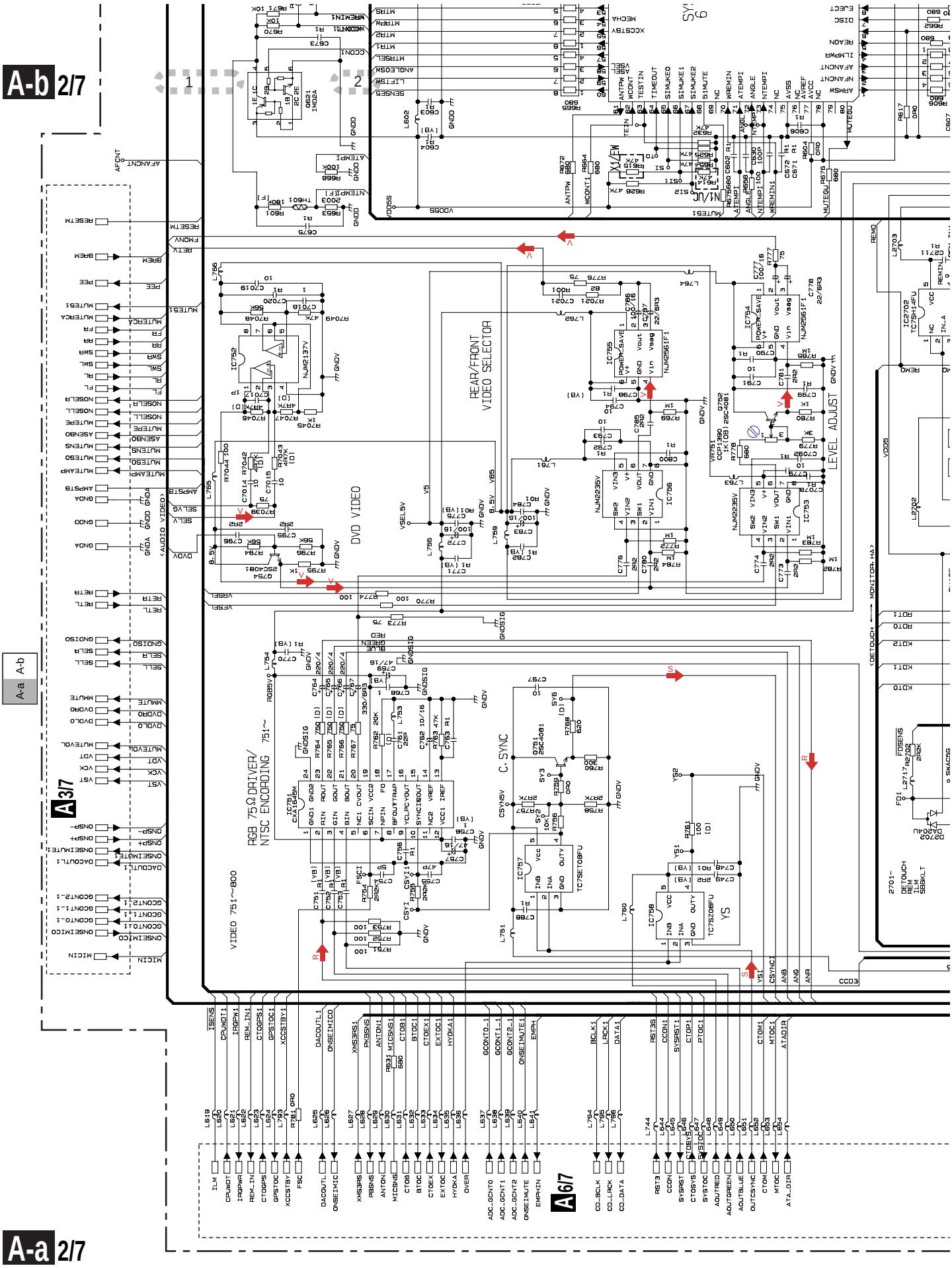
A-b 2/7
A-a 2/7
A3/7
A6/7
REAR/FRONT VIDEO SELECTOR
DVD VIDEO
LEVEL ADJUST
RGB 75Ω DRIVER/ NTSC ENCORDING 751~
VIDEO 751~800
C. SYNC
YS
SYSCON
X1/EW
N1/UC
ILM
CPUWDT
IRQPWR
REM_IN
CTOGPS
GPSTOC
XCSTBY
FSC
DACOUTL
ONSEIMICO
XMSGRS
PBSNS
ANTON
MICSNS
CTOB
BTOC
CTOEX
EXTOC
HYOKA
DVER
ADC_GCNT0
ADC_GCNT1
ADC_GCNT2
ONSEIMUTE
EMPHIN
CD_BCLK
CD_LRCK
CD_DATA
RST3S
CCON
SYSRST
CTOSYS
SYSTOC
AOUTRED
AOUTGREEN
AOUTBLUE
OUTCSYNC
CTOM
MTOC
ATA_DIR
<AUDIO VIDEO>
<DETOUCH ⟷ MONITOR HA>
2701- DETOUCH REM ILM SBBKLT

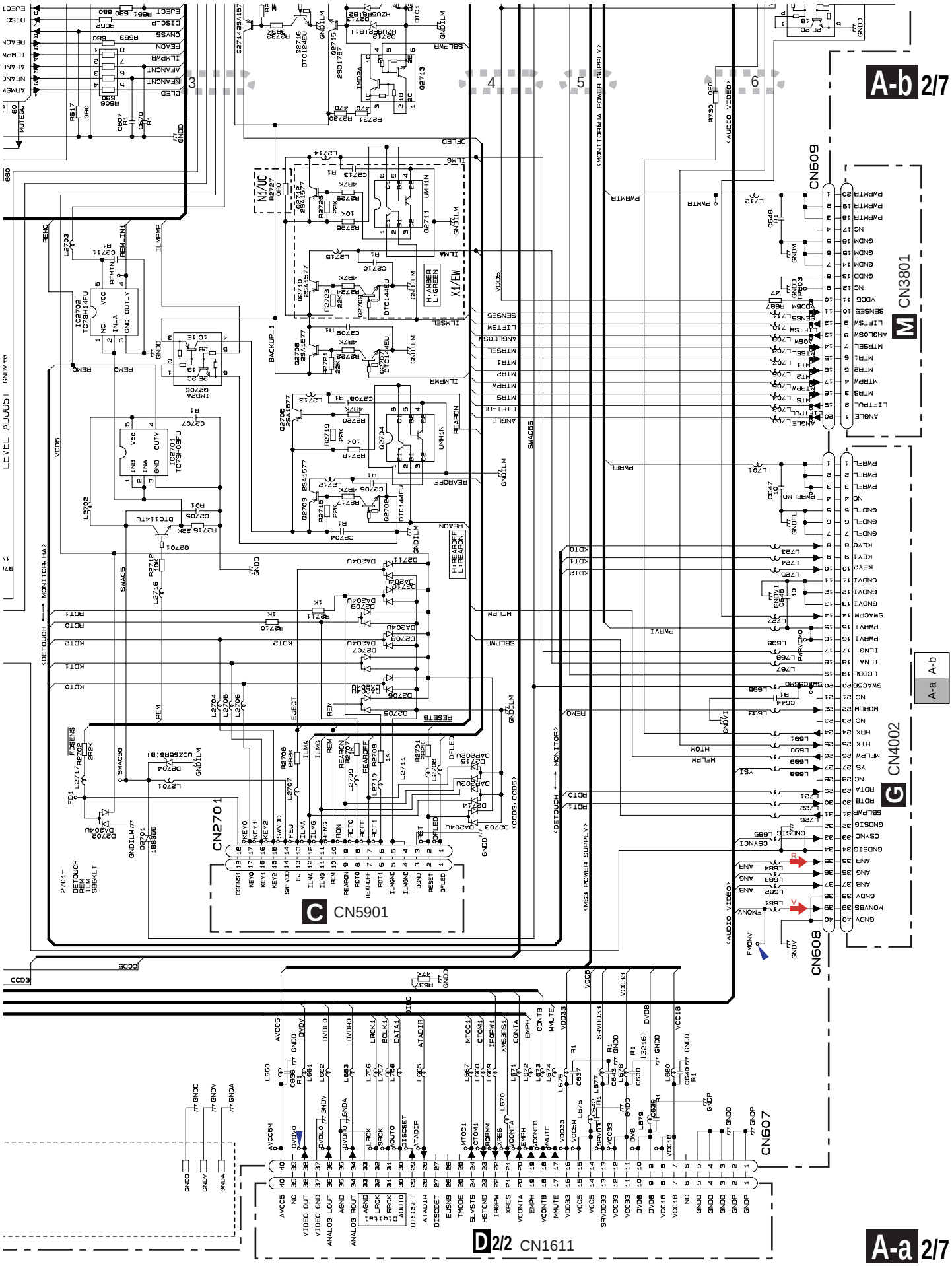
A-b 2/7
A-a 2/7
CN609
M CN3801
CN608
G CN4002
CN2701
C CN5901
CN607
D 2/2 CN1611
N1/UC
X1/EW
H:AMBER
L:GREEN
H:READOFF
L:READON
LEVEL ADJUST
<MONITOR&HA POWER SUPPLY>
<AUDIO VIDEO>
<DETOUCH ⟷ MONITOR>
<DETOUCH ⟷ MONITOR-HA>
<CCD3, CCD5>
<NVS3 POWER SUPPLY>
A-b
A-a

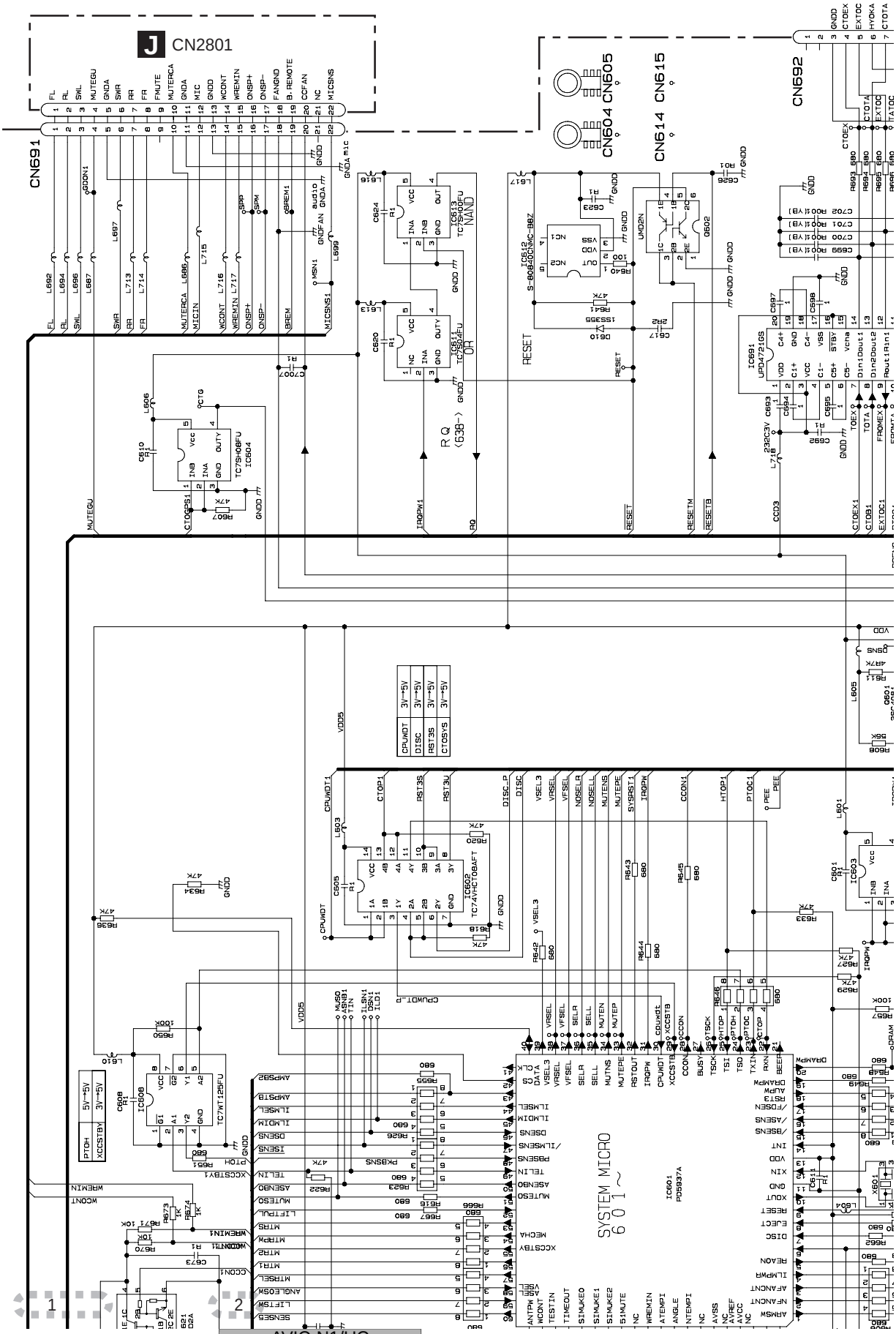
TELE ATLAS
J CN2801
CN691
CN692
CN604 CN605
CN614 CN615
RESET
SYSTEM MICRO
601 ~
IC601
PD5937A
IC602
TC74VHCT08AFT
IC603
TC7WT125FU
IC604
TC7SH08FU
IC606
TC7WT125FU
IC613
TC7SH02FU
NAND
IC614
TC7SH04FU
OR
IC612
S-80820CNMC-B8Z
IC691
UPD4721GS
Q502
UMD2N
CPUWDT
DISC
RST3S
CTOSYS
3V→5V
PTOH
XCCSTBY
5V→5V
3V→5V

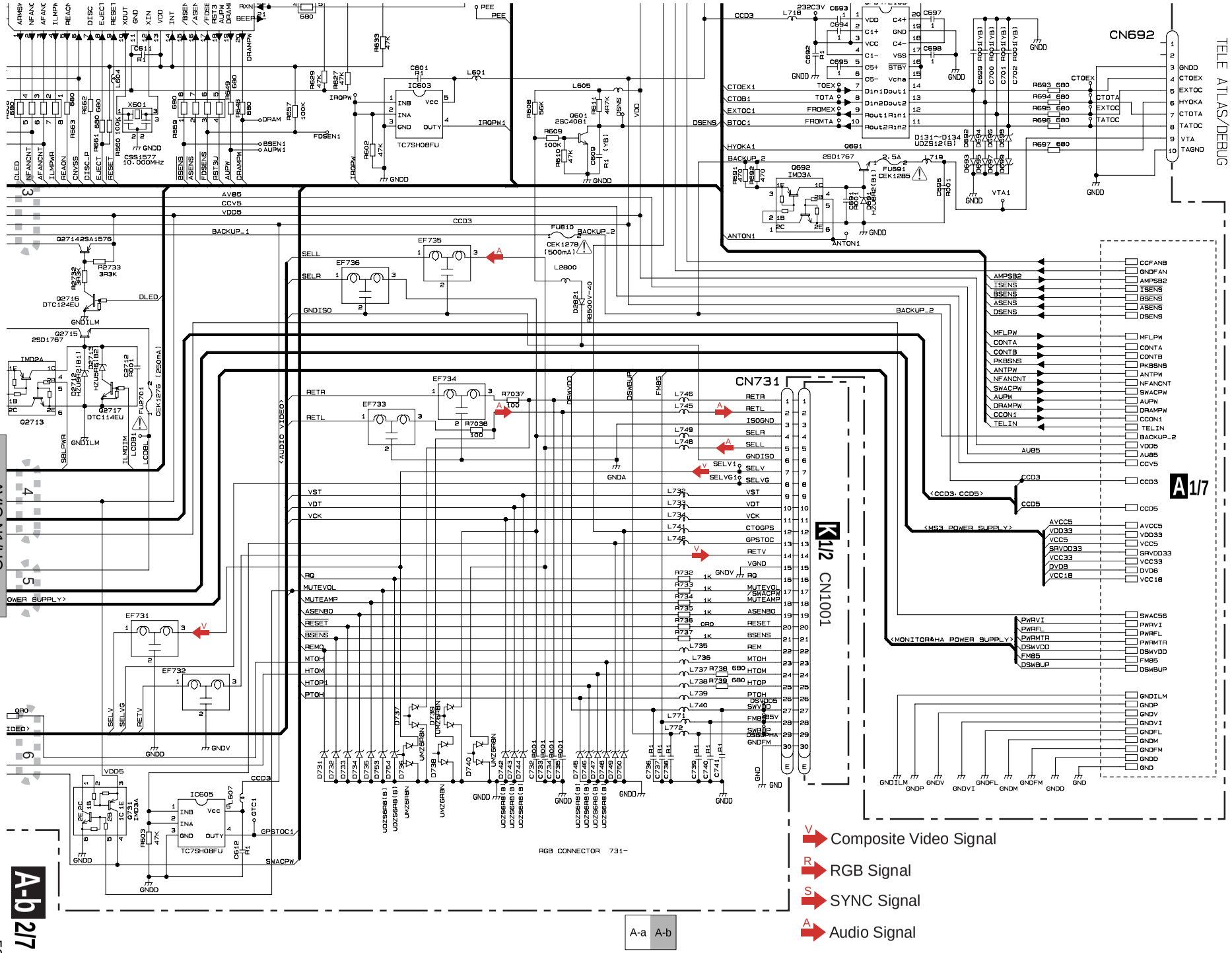
TELE ATLAS/DEBUG
CN692
CN731
K 1/2 CN1001
A 1/7
A-b 2/7
AVIC-N1/UC
RGB CONNECTOR 731~
Composite Video Signal
RGB Signal
SYNC Signal
Audio Signal
A-a
A-b

3.5 CC UNIT (AUDIO)(GUIDE PAGE)

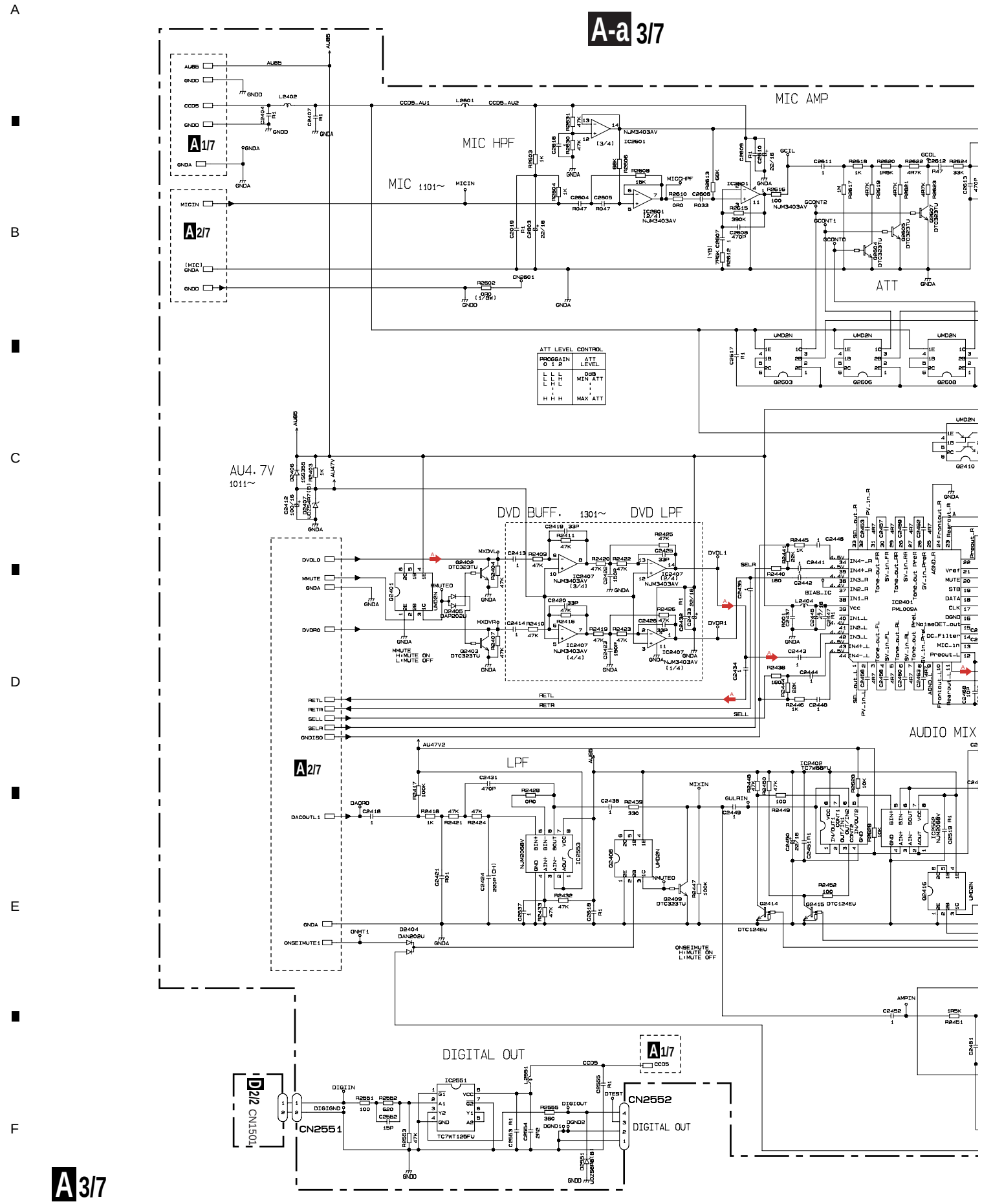

A-b 3/7

A 3/7 CC UNIT (AUDIO)

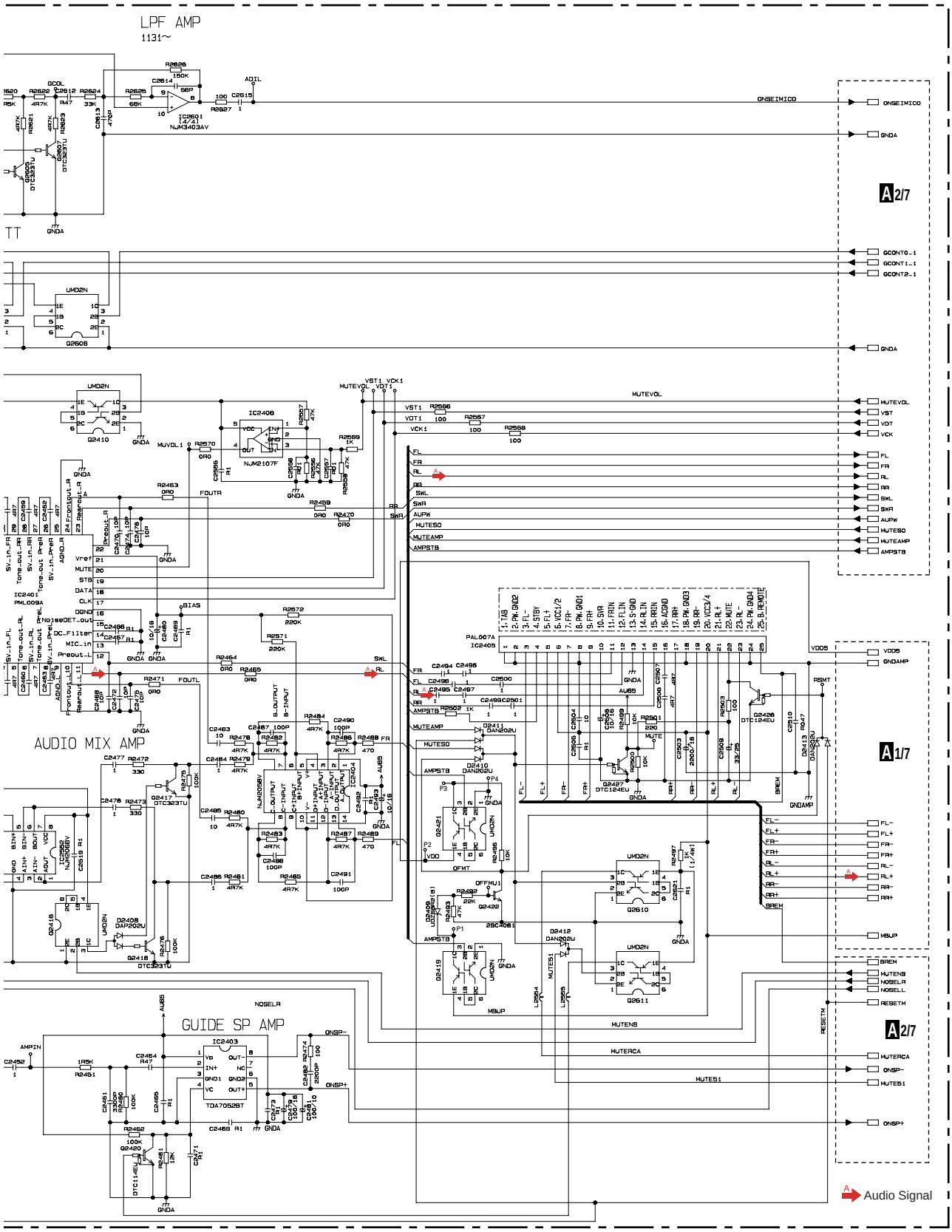

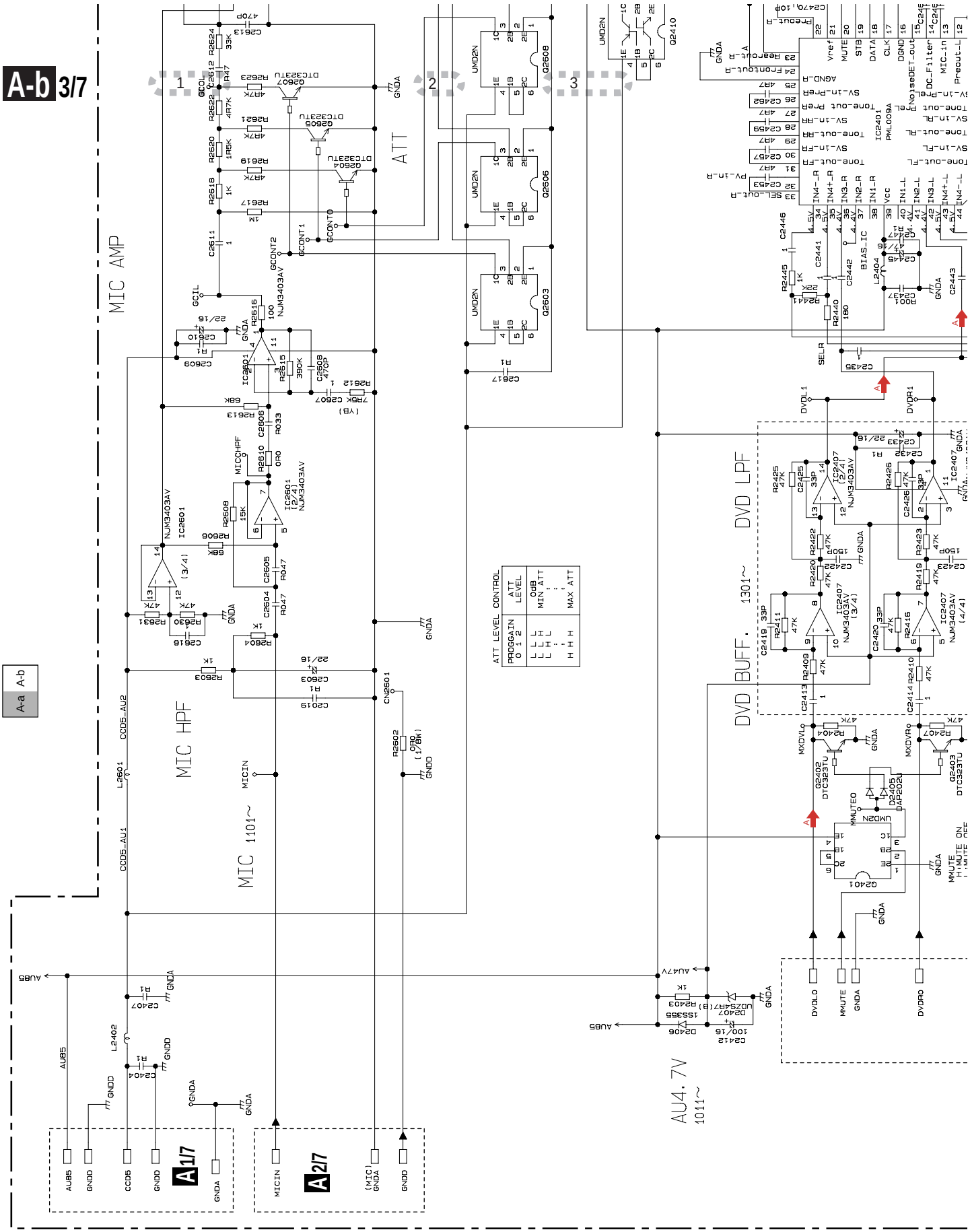
MIC AMP
ATT
MIC HPF
MIC 1101~
DVD BUFF. 1301~
DVD LPF
AU4.7V 1011~
ATT LEVEL CONTROL
PROGGAIN 0 1 2
ATT LEVEL
0dB MIN ATT
MAX ATT
A1/7
A2/7
A-a
A-b

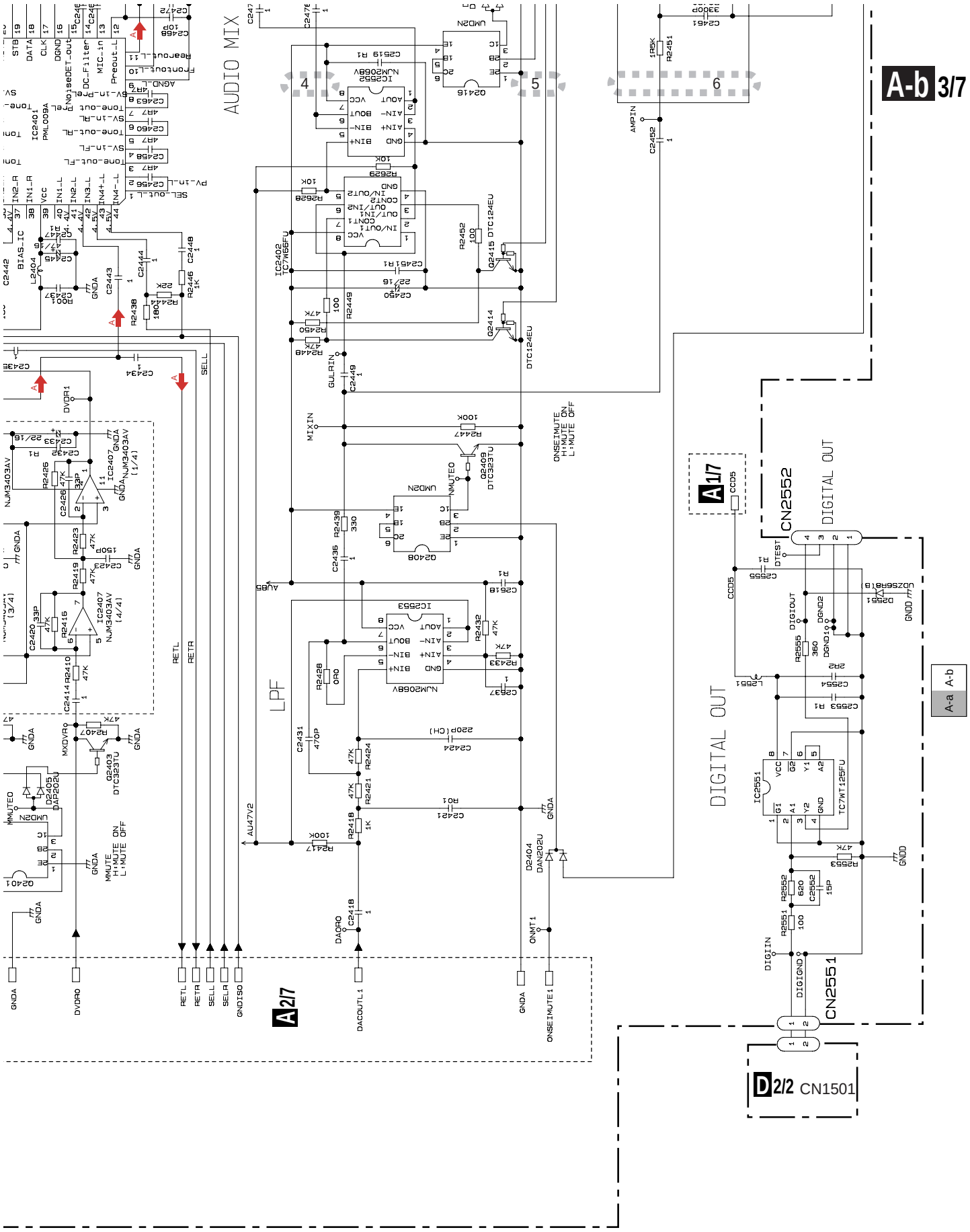
AUDIO MIX
LPF
DIGITAL OUT
A-b 3/7
A-a 3/7
A 1/7
A 2/7
D 2/2 CN1501
CN2552
CN2551
IC2551
TC7WT125FU
IC2402
IC2407
NJM3403AV
NJM2068V
IC2552
Q2415 DTC124EU
Q2414
Q2409 DTC323TU
Q2403 DTC323TU
Q2401
Q2408
Q2416
D2404 DAN202U
D2405 DAP202U
D2551
IC2401 PML009A
RETL
RETR
SELL
SELR
GNDISO
DACOUTL1
ONSEIMUTE1
DVDRO
GNDA
GNDD
AMPIN
DIGIN
DIGOUT
DIGIGND
DTEST
CCD5
MIXIN
GULAIN
ONSEIMUTE
H:MUTE ON
L:MUTE OFF
MMUTE
NMUTEO
MXDVRO
DVDR1
AU47V2
AU85
DAORO
QNMT1
A-a
A-b

A 3/7 CC UNIT (AUDIO)

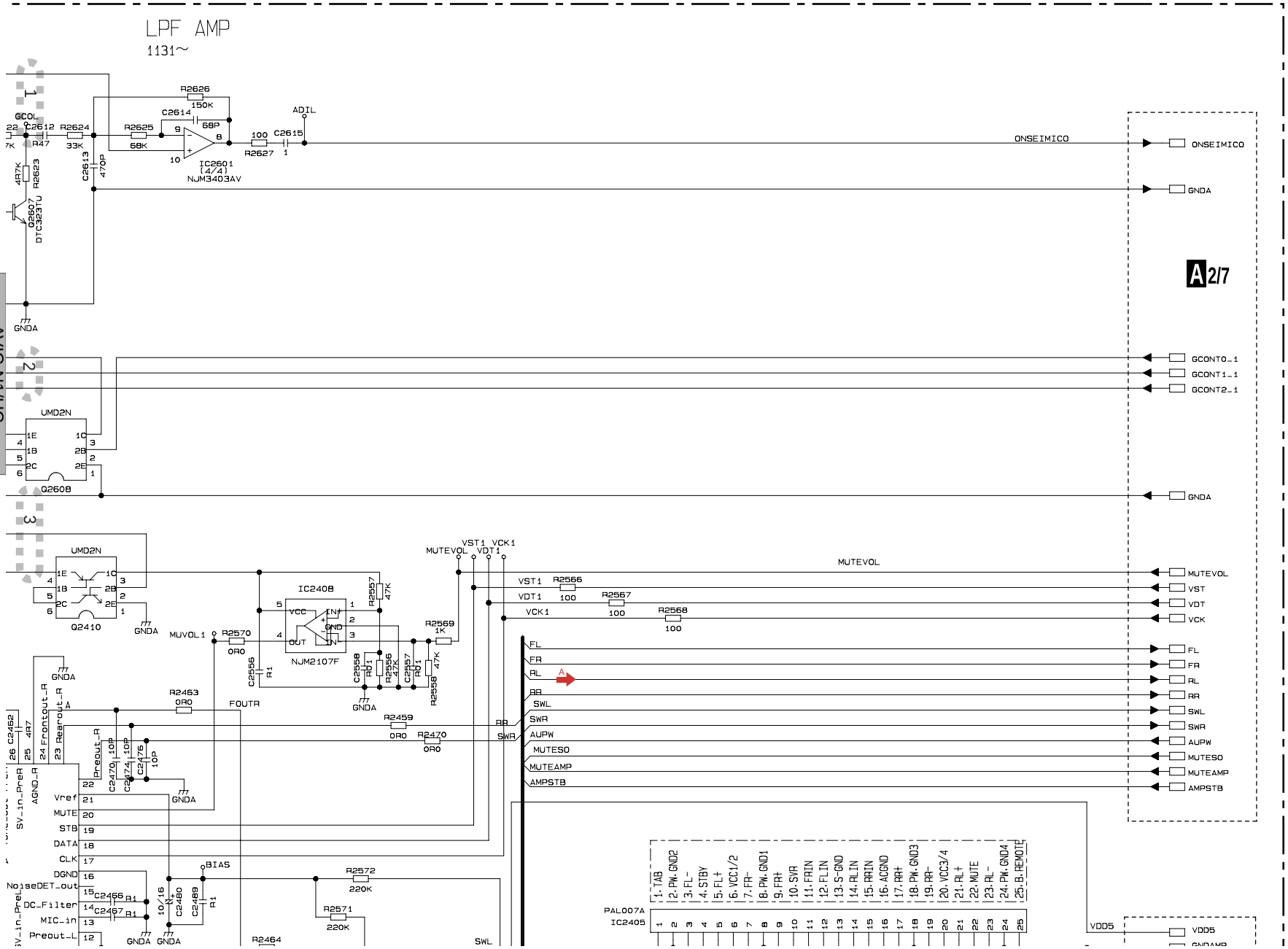

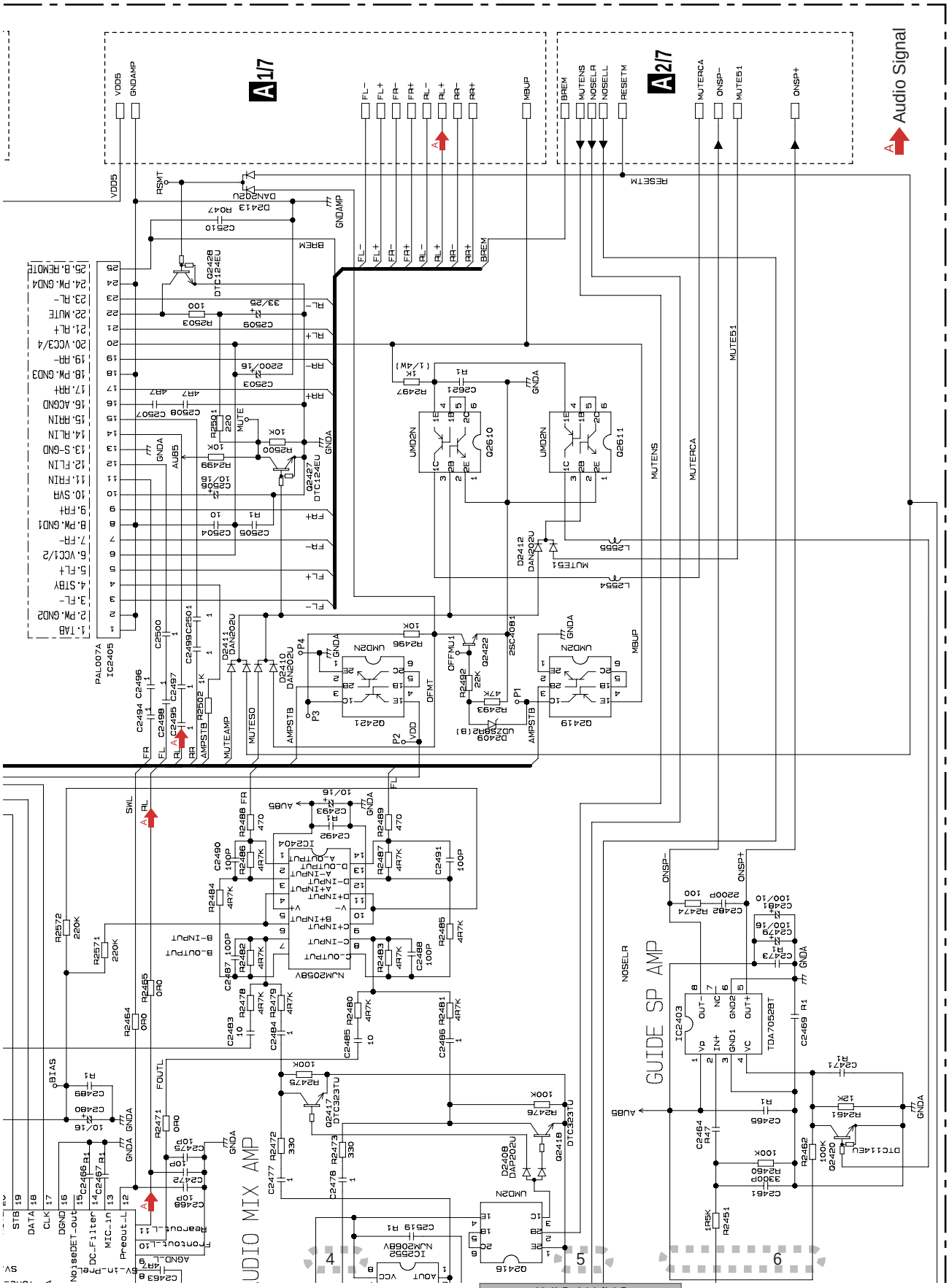
A 1/7
VDD5
GNDAMP
FL−
FL+
FR−
FR+
RL−
RL+
RR−
RR+
MBUP
A 2/7
BREM
MUTENS
NOSELR
NOSELL
RESETM
MUTERCA
ONSP−
MUTE51
ONSP+
Audio Signal
RSMT
DAN202U
D2413 R047
C2510
GNDAMP
RESETM
Q2428 DTC124EU
PAL007A IC2405
1.TAB
2.PW.GND2
3.FL−
4.STBY
5.FL+
6.VCC1/2
7.FR−
8.PW.GND1
9.FR+
10.SVR
11.FRIN
12.FLIN
13.S-GND
14.RLIN
15.RRIN
16.ACGND
17.RR+
18.PW.GND3
19.RR−
20.VCC3/4
21.RL+
22.MUTE
23.RL−
24.PW.GND4
25.B.REMOTE
Q2610 UMD2N
Q2611 UMD2N
Q2421 UMD2N
Q2419 UMD2N
Q2422 2SC4081
Q2427 DTC124EU
D2409 UDZS8R2(B)
D2410 DAN202U
D2411 DAN202U
D2412 DAN202U
L2554
L2555
MUTE51
OFFMU1
OFMT
AMPSTB
MUTESO
MUTEAMP
AUB5
MUTE
IC2404 NJM2058V
A-OUTPUT
A-INPUT
A+INPUT
V+
B+INPUT
B-INPUT
B-OUTPUT
C-OUTPUT
C-INPUT
C+INPUT
V−
D+INPUT
D-INPUT
D-OUTPUT
GUIDE SP AMP
IC2403 TDA7052BT
Vp
IN+
GND1
VC
OUT+
GND2
NC
OUT−
Q2417 DTC323TU
Q2418 DTC323TU
Q2420 DTC114EU
D2408 DAP202U
Q2416 UMD2N
IC2552 NJM2068V
AUDIO MIX AMP
BIAS
FOUTL
SWL
STB
DATA
CLK
DGND
NoiseDET_out
DC_Filter
MIC_in
Preout_L
Rearout_L
Frontout_L
AGND_L
SV-in-PreL
A
B
C
D
E
F
5
6
7
8
A-a
A-b

3.6 CC UNIT (CPU, ASIC, SDRAM)(GUIDE PAGE)

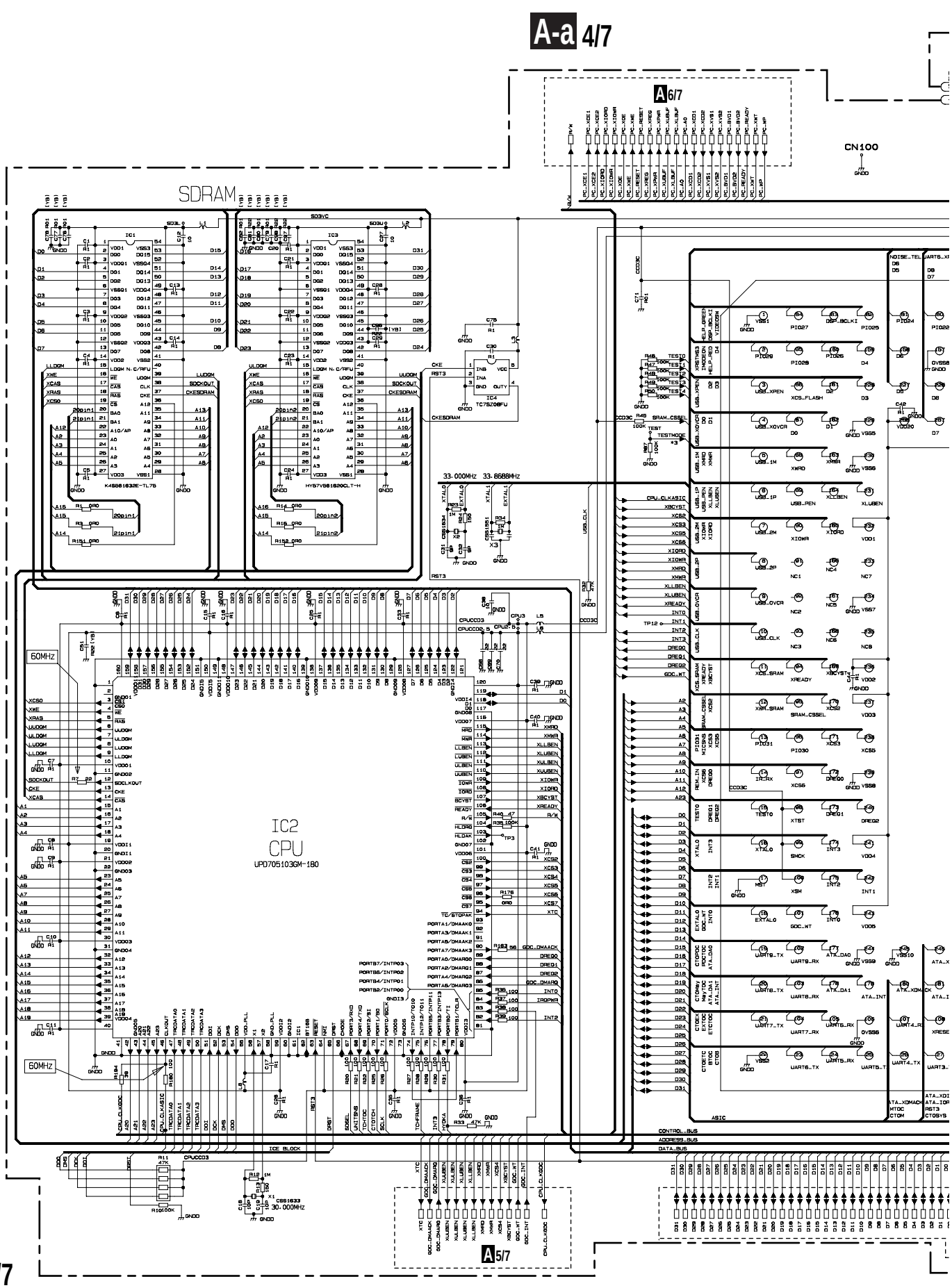

A 4/7 CC UNIT (CPU, ASIC, SDRAM)

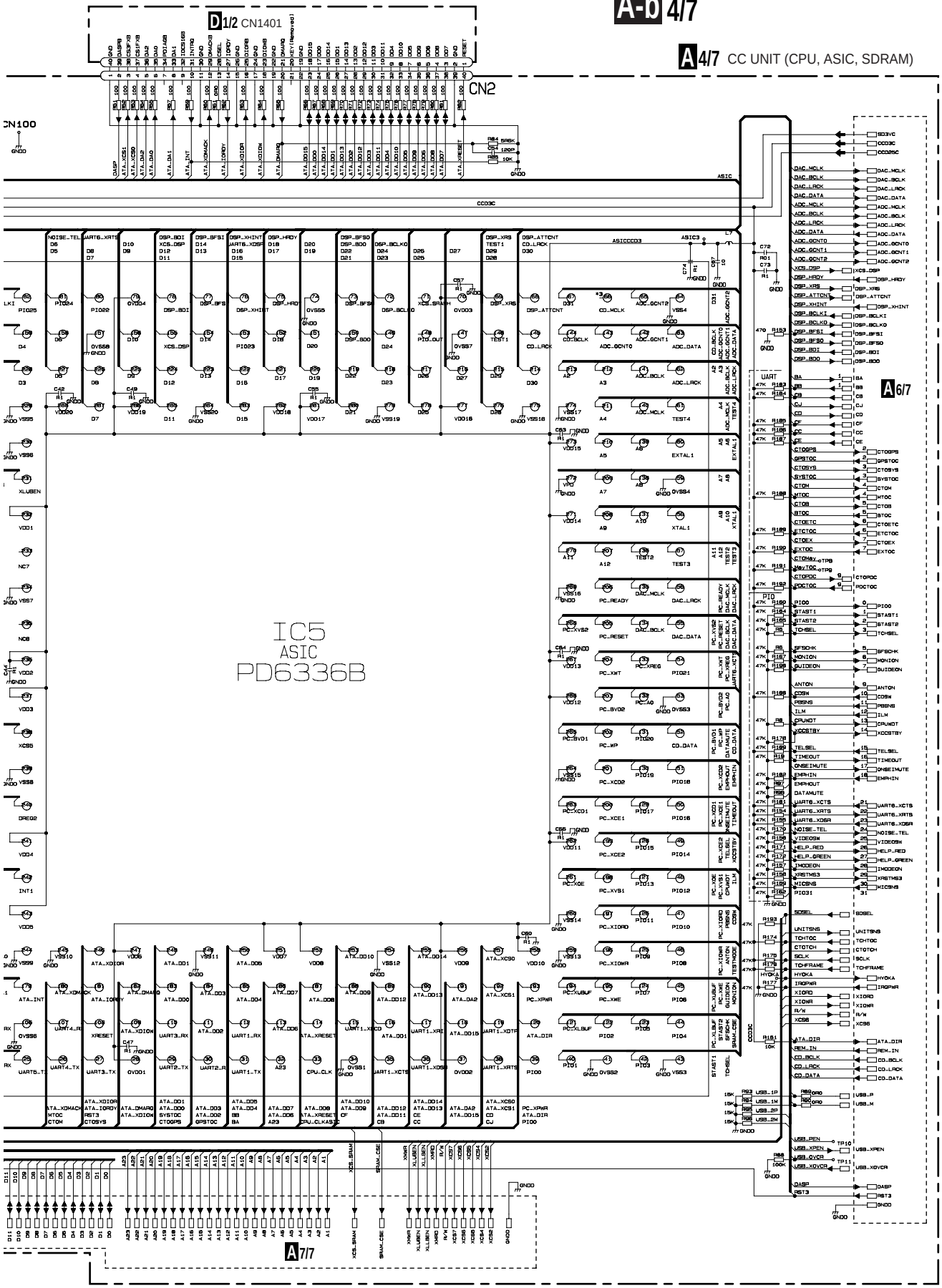

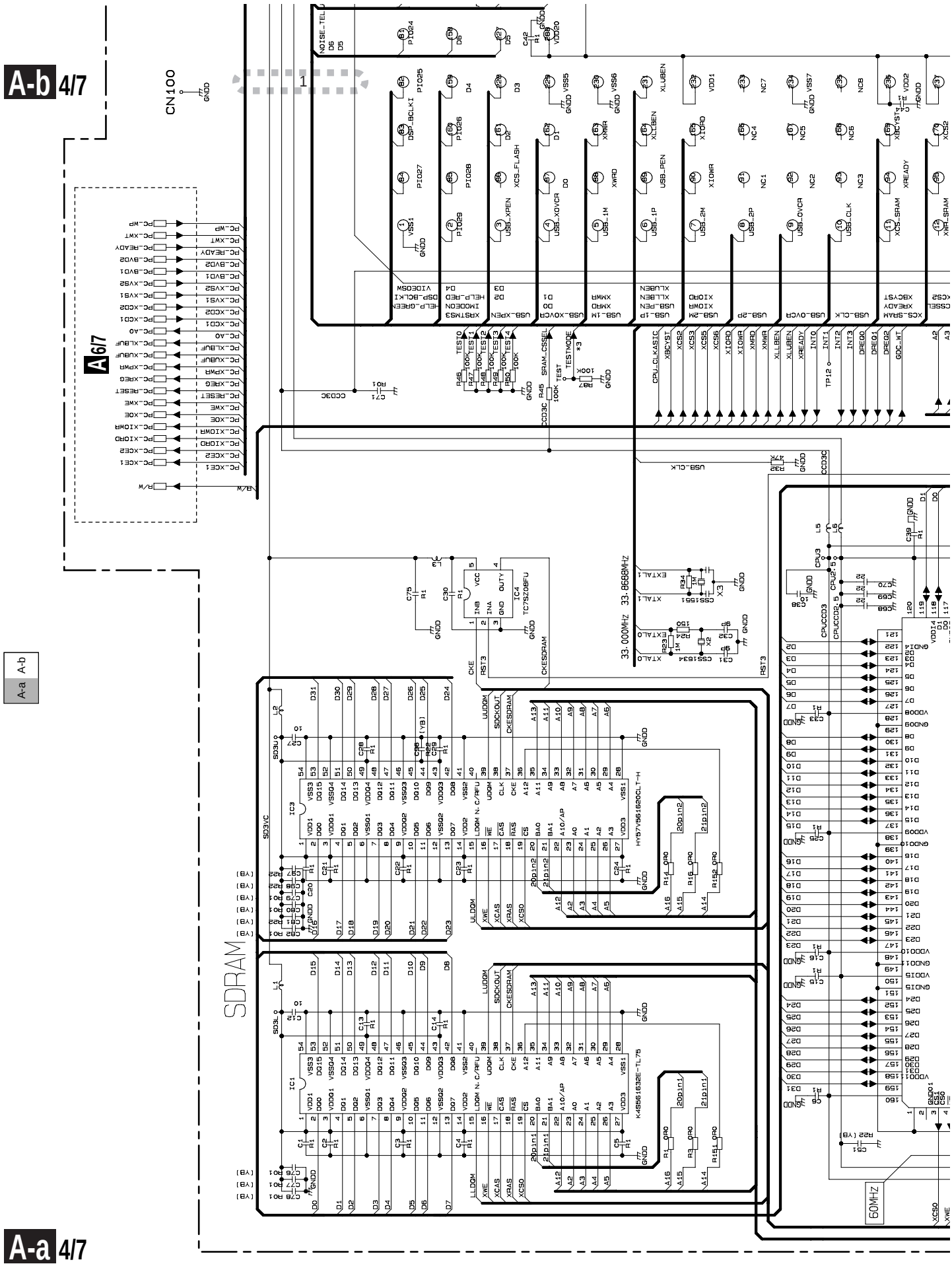
A-b 4/7
A 6/7
CN100
SDRAM
60MHZ
A-a 4/7

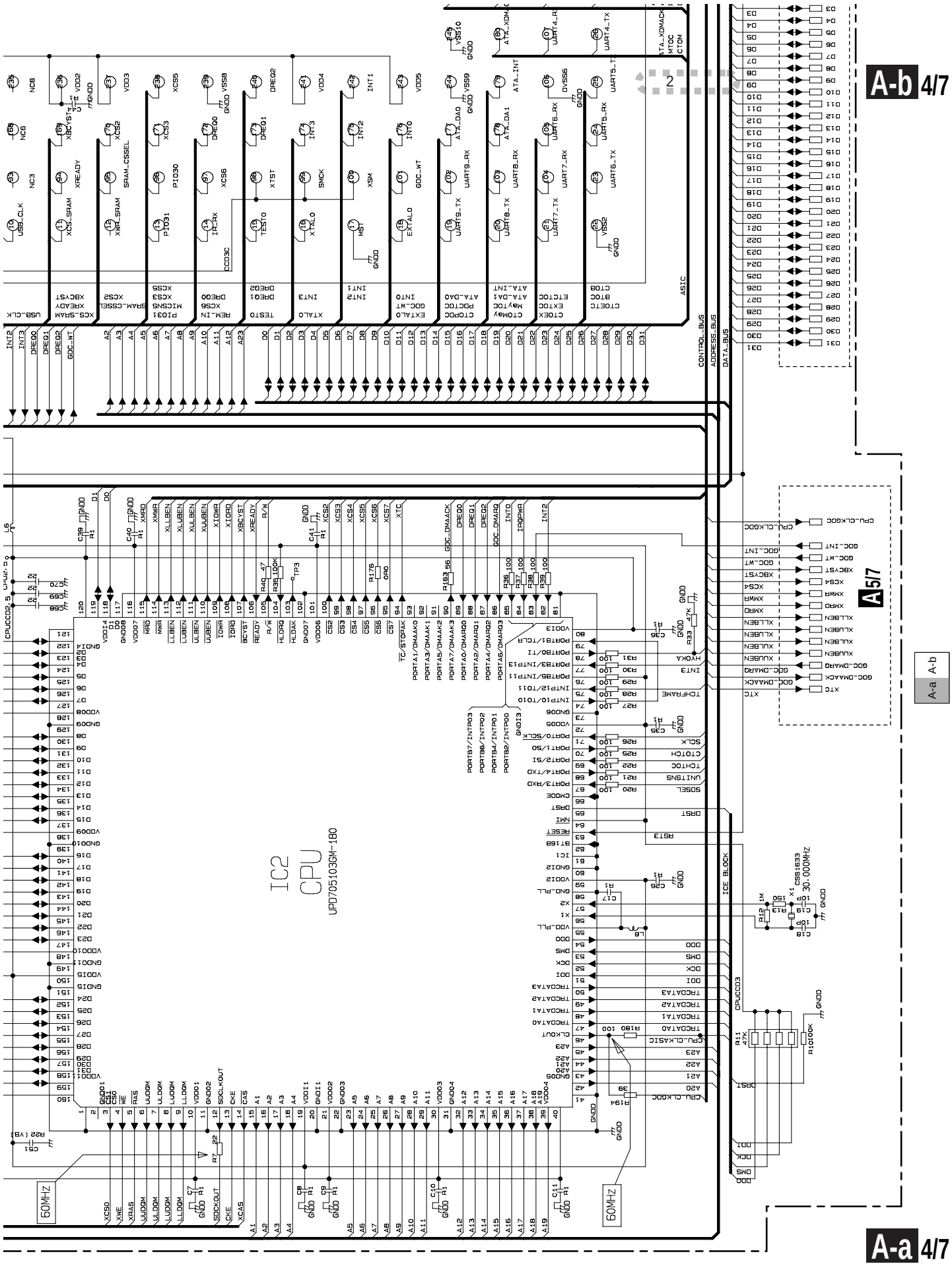
A-b 4/7
A-a 4/7
A 5/7
A-b
A-a
IC2
CPU
UPD705103GM-180
ASIC
CONTROL_BUS
ADDRESS_BUS
DATA_BUS
ICE BLOCK
60MHz
30.000MHz

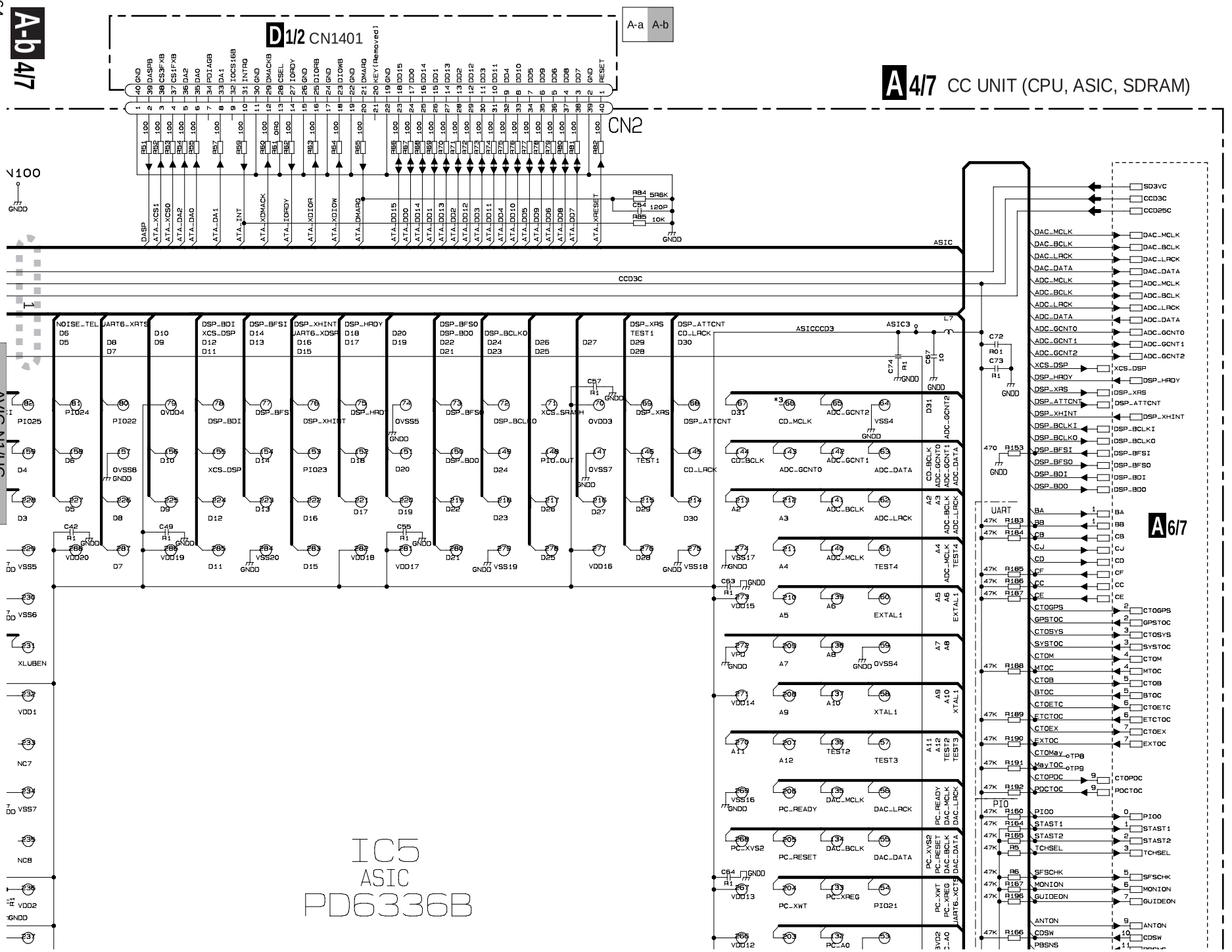
D1/2 CN1401
A-a A-b
A 4/7 CC UNIT (CPU, ASIC, SDRAM)
CN2
A 6/7
IC5
ASIC
PD6336B
AVIC-N1/UC
UART
PIO

IC5
ASIC
PD6336B

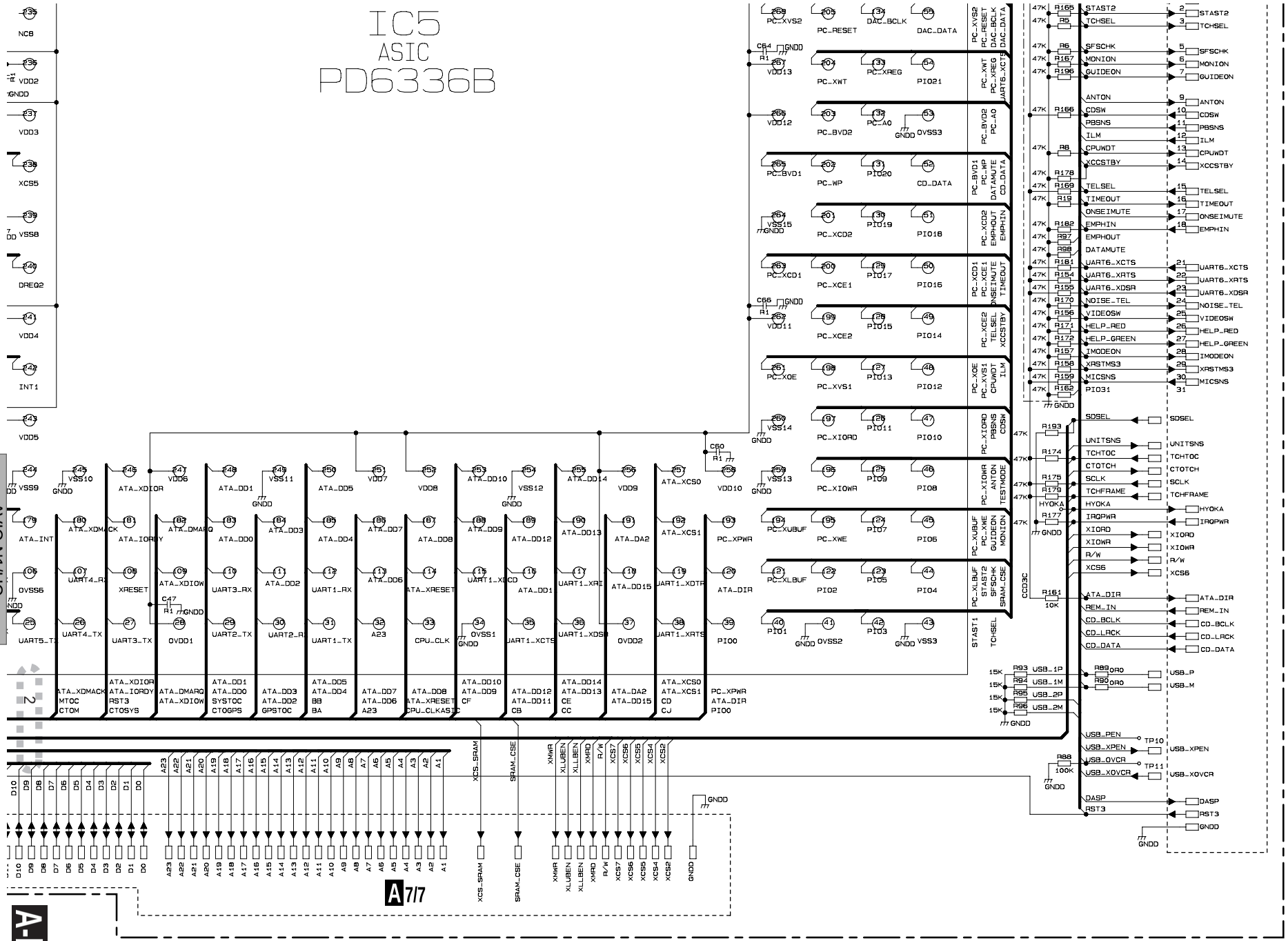

A-b 4/7

3.7 CC UNIT (GRAPHIC)

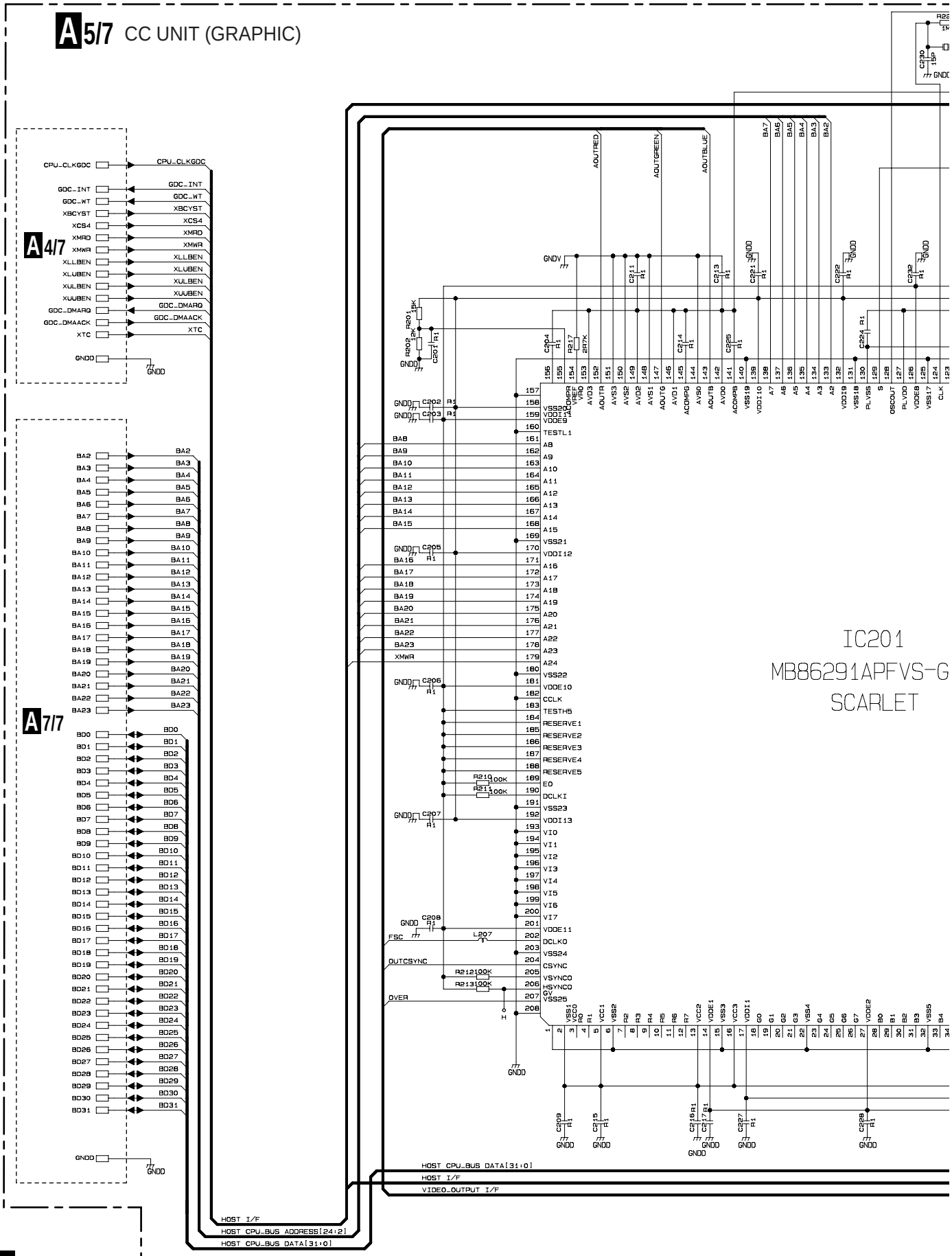

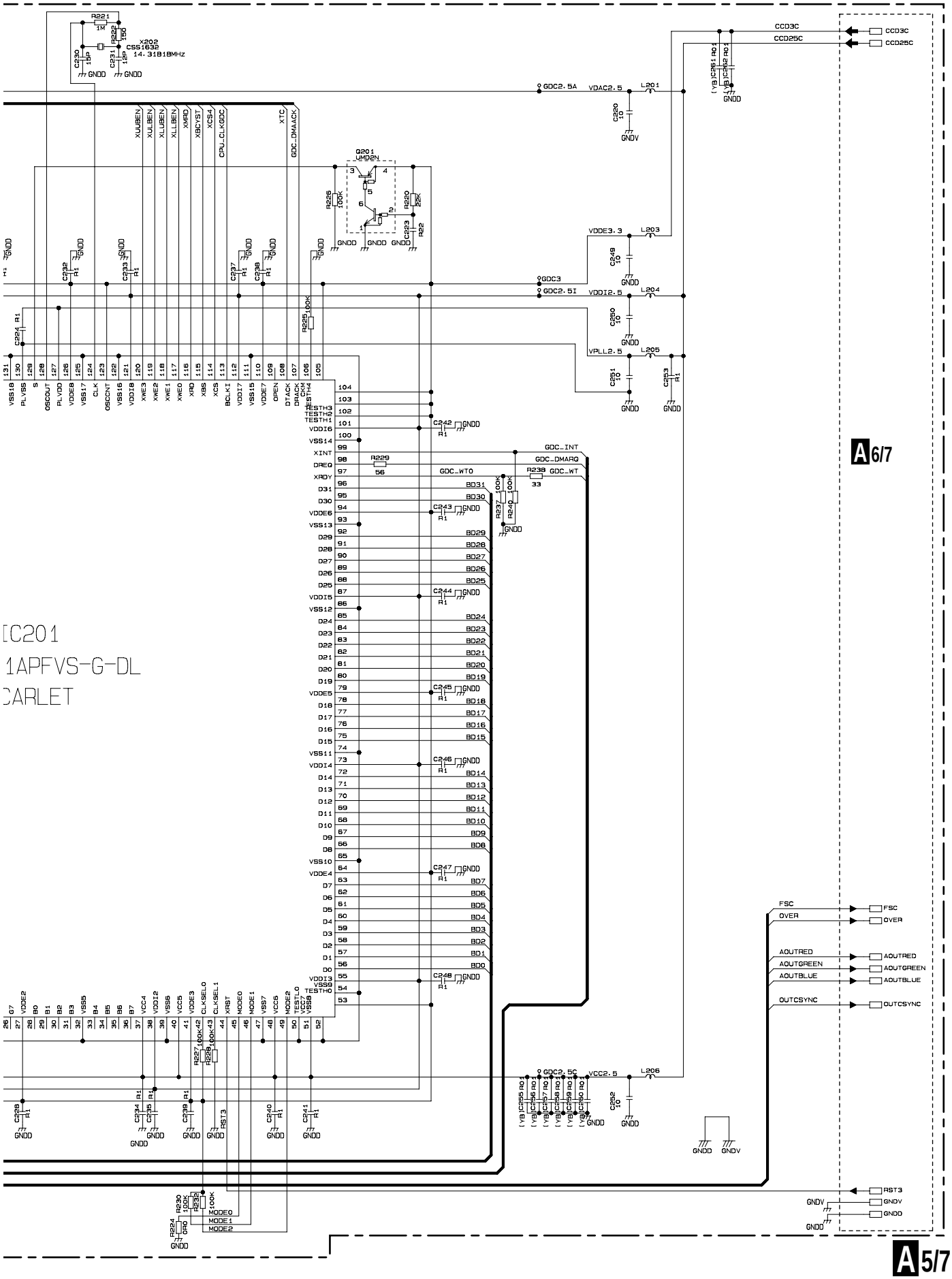
IC201
1APFVS-G-DL
CARLET
A 6/7
A 5/7
X202
CSS1632
14.31818MHz
Q201
UMD2N
CCD3C
CCD25C
FSC
OVER
AOUTRED
AOUTGREEN
AOUTBLUE
OUTCSYNC
RST3
GNDV
GNDD
GDC2.5A
VDAC2.5
VDDE3.3
VDDI2.5
VPLL2.5
VCC2.5
GDC3
GDC2.5I
GDC_INT
GDC_DMARQ
GDC_WT
GDC_WTO
MODE0
MODE1
MODE2

3.8 CC UNIT (MAIN, CC CORE I/F)

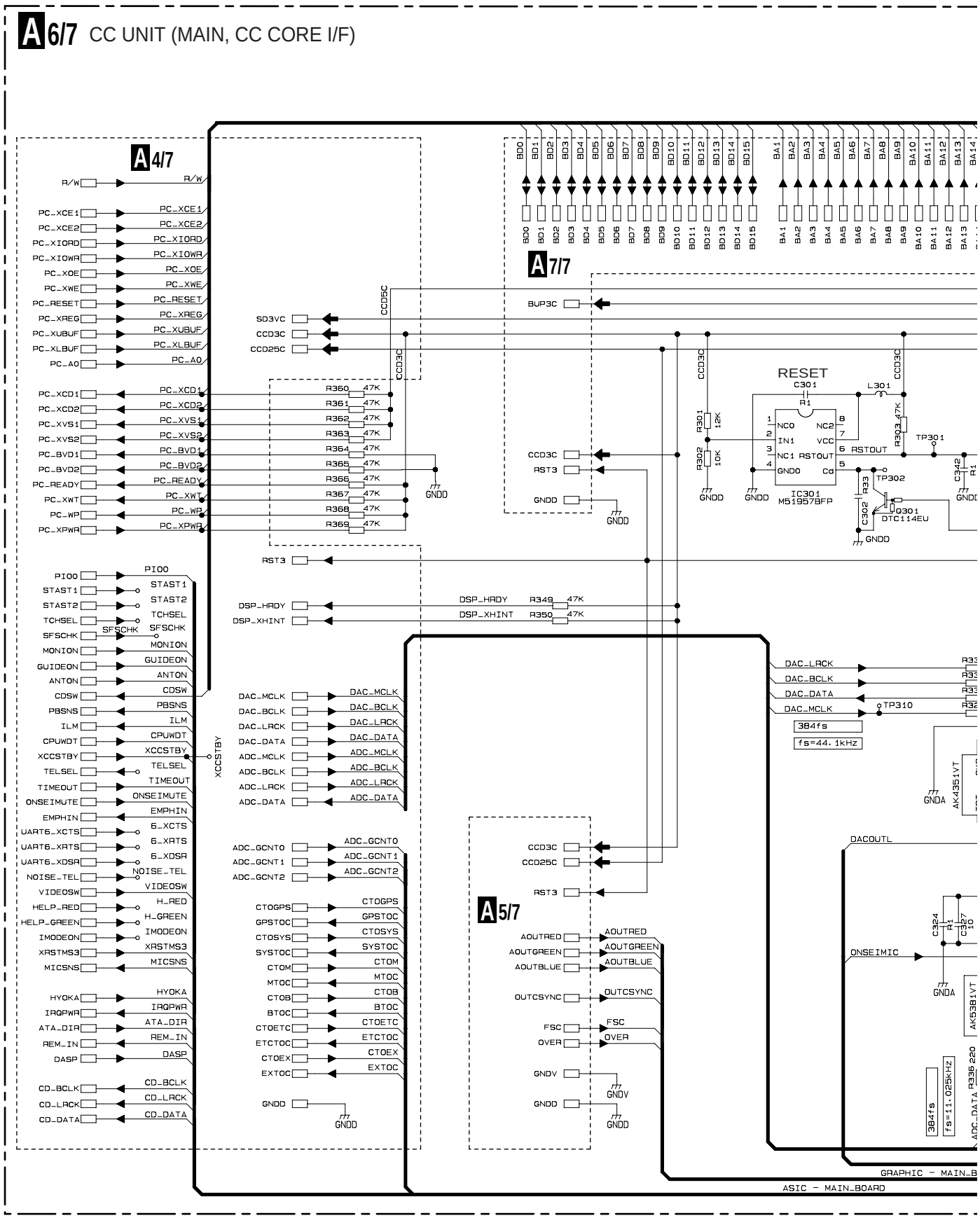

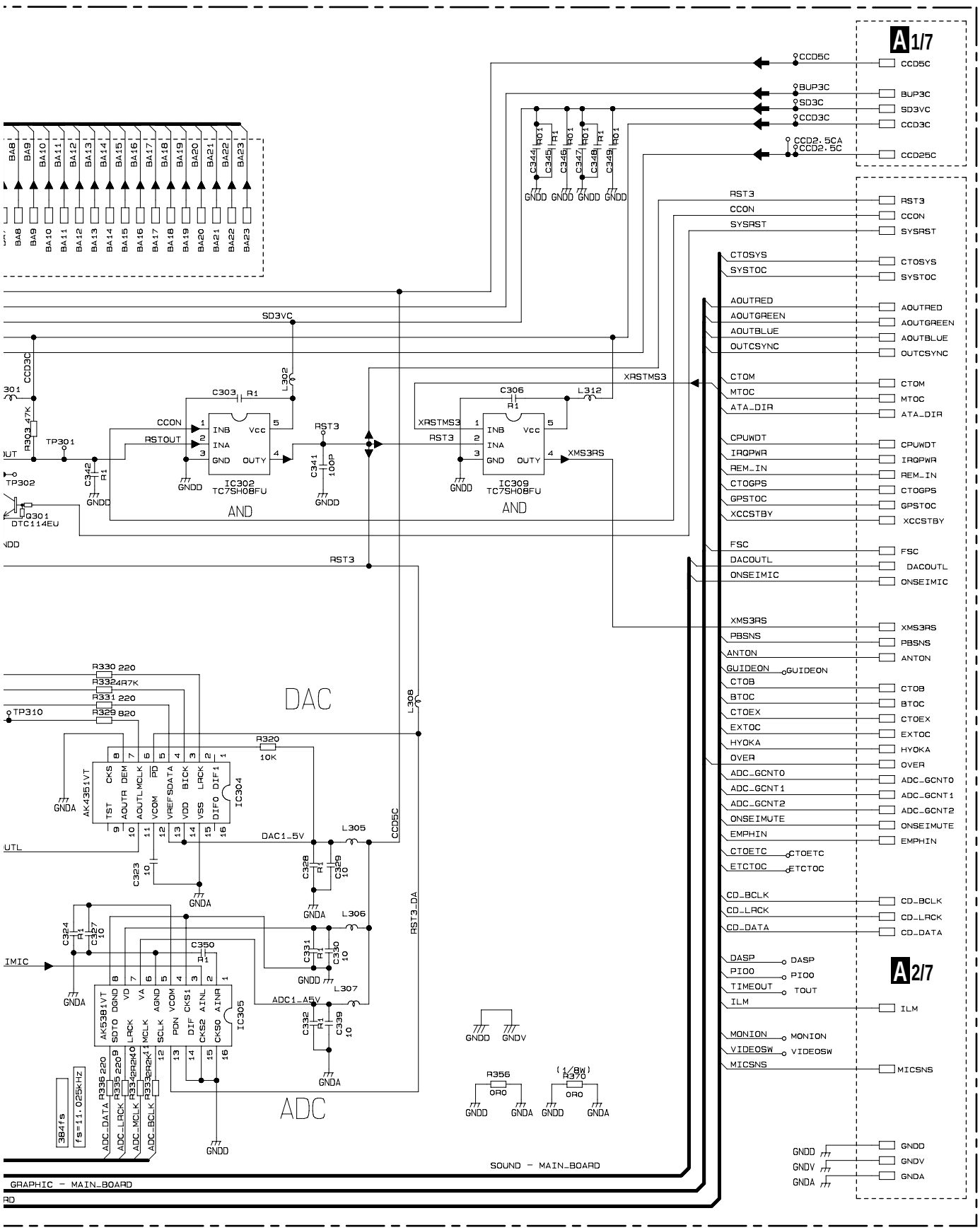
A1/7
CCD5C
BUP3C
SD3C
SD3VC
CCD3C
CCD2.5CA
CCD2.5C
CCD25C
RST3
CCON
SYSRST
CTOSYS
SYSTOC
AOUTRED
AOUTGREEN
AOUTBLUE
OUTCSYNC
CTOM
MTOC
ATA_DIR
CPUWDT
IRQPWR
REM_IN
CTOGPS
GPSTOC
XCCSTBY
FSC
DACOUTL
ONSEIMIC
XMS3RS
PBSNS
ANTON
GUIDEON
CTOB
BTOC
CTOEX
EXTOC
HYOKA
OVER
ADC_GCNT0
ADC_GCNT1
ADC_GCNT2
ONSEIMUTE
EMPHIN
CTOETC
ETCTOC
CD_BCLK
CD_LRCK
CD_DATA
DASP
PIOO
TIMEOUT
TOUT
ILM
MONION
VIDEOSW
MICSNS
A2/7
GNDD
GNDV
GNDA
XRSTMS3
IC302
TC7SH08FU
AND
IC309
TC7SH08FU
AND
XMS3RS
DAC
IC304
AK4351VT
DAC1_5V
CCD5C
RST3_DA
ADC
IC305
AK5381VT
ADC1_A5V
ADC_DATA
ADC_LRCK
ADC_MCLK
ADC_BCLK
384fs
fs=11.025kHz
SOUND - MAIN_BOARD
GRAPHIC - MAIN_BOARD
A6/7

3.9 CC UNIT (ROM, SRAM, BUS-BUFFER)

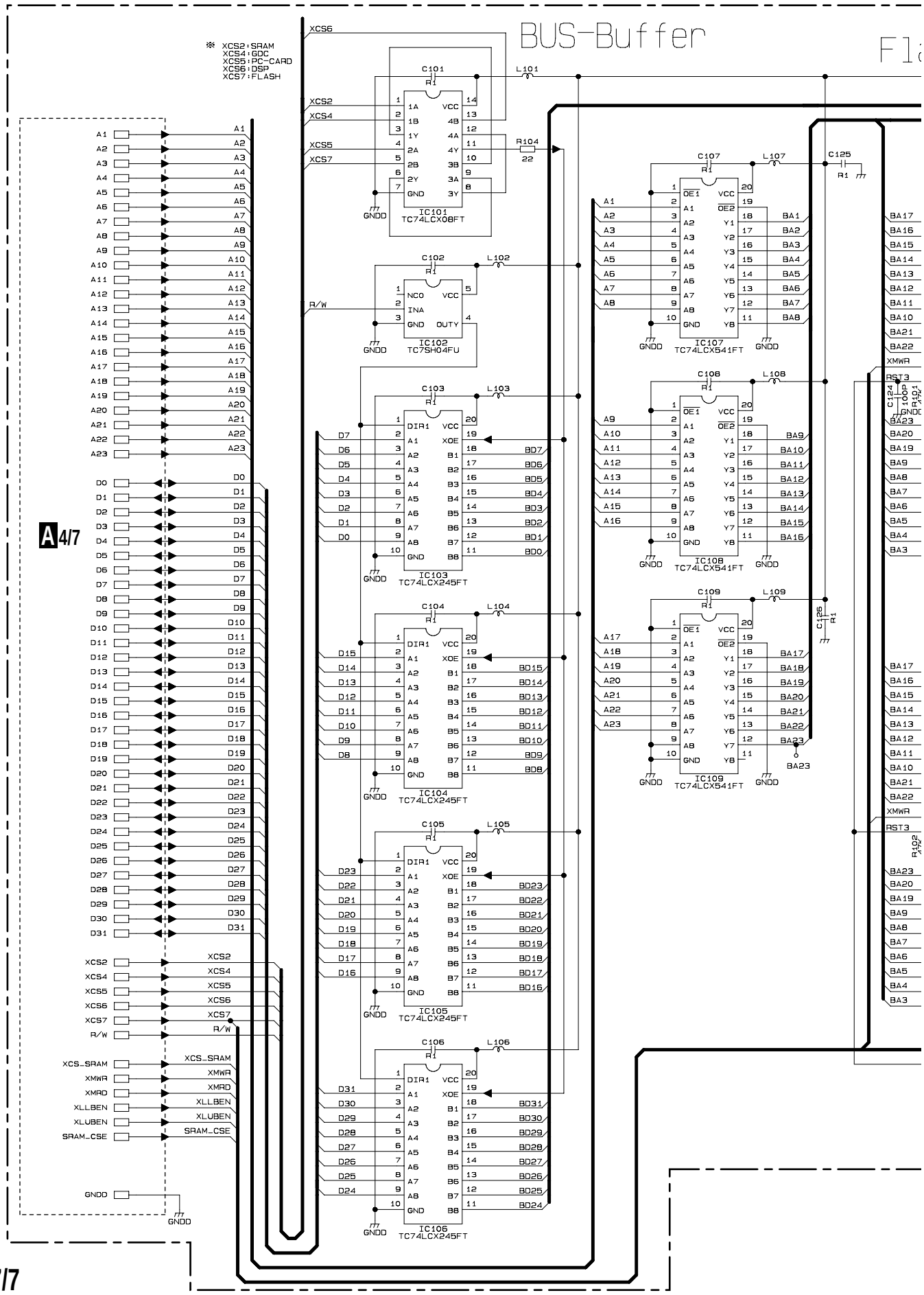

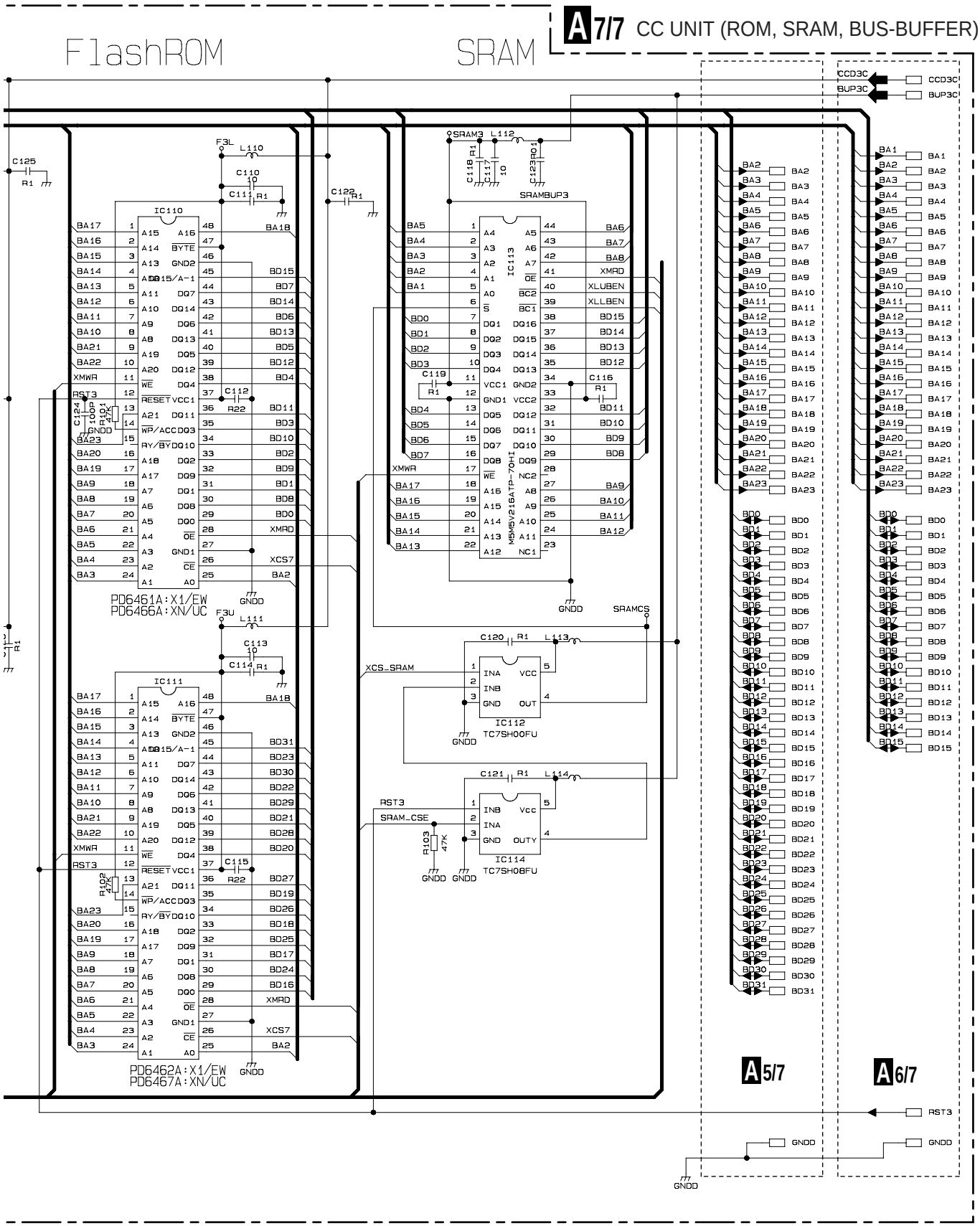
FlashROM
SRAM
IC110
PD6461A:X1/EW
PD6466A:XN/UC
IC111
PD6462A:X1/EW
PD6467A:XN/UC
IC113
M5M5V216ATP-70HI
SRAMBUP3
IC112
TC7SH00FU
IC114
TC7SH08FU
CCD3C
BUP3C
RST3
GNDD
SRAMCS
XCS_SRAM
SRAM_CSE
A5/7
A6/7

3.10 KEYBOARD PCB

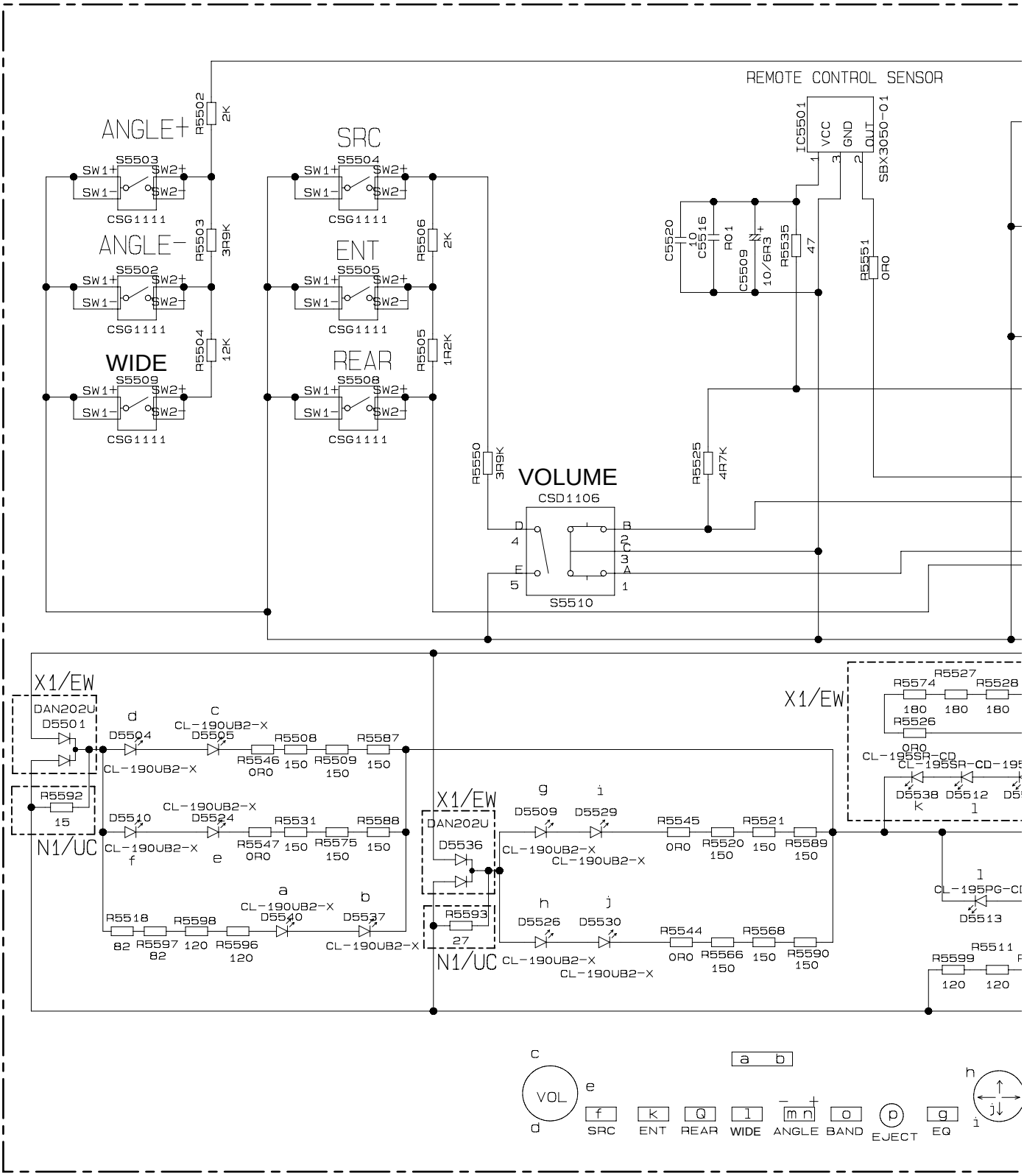

B KEYBOARD PCB

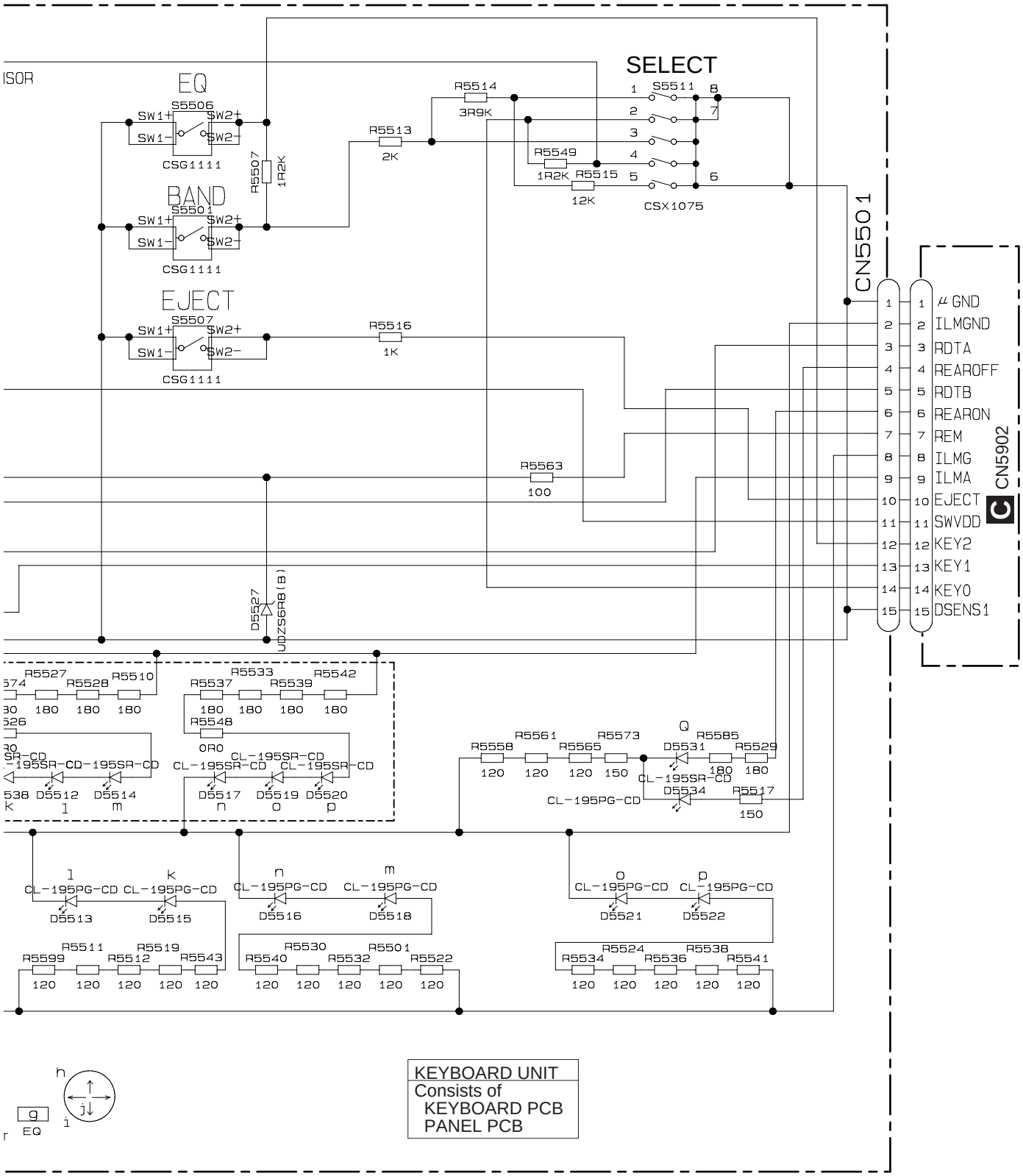

3.11 PANEL PCB

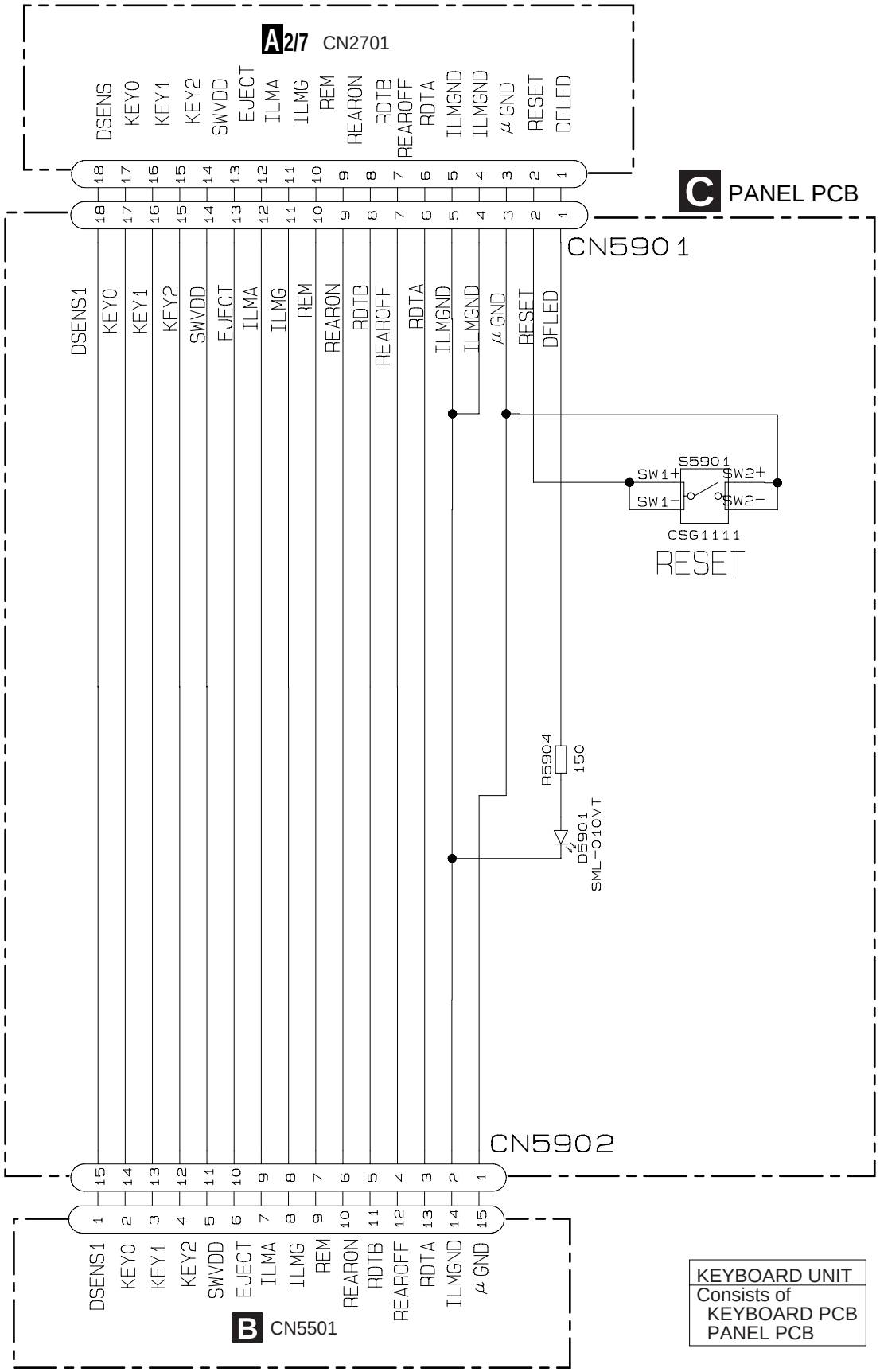

C

3.12 DVD CORE UNIT(MS3)(SODC)(GUIDE PAGE)

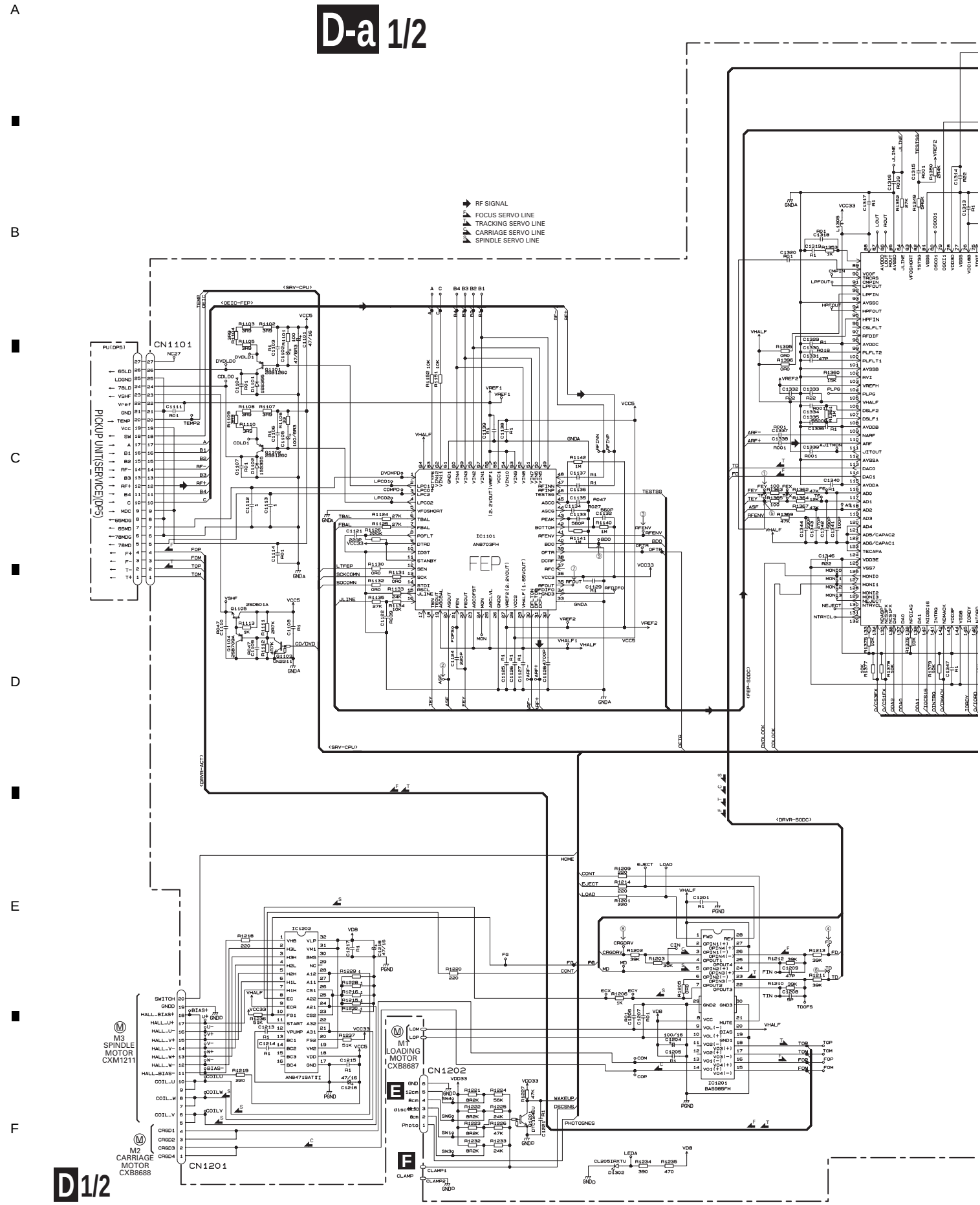

D-b 1/2

D1/2 DVD CORE UNIT(MS3)(SODC)

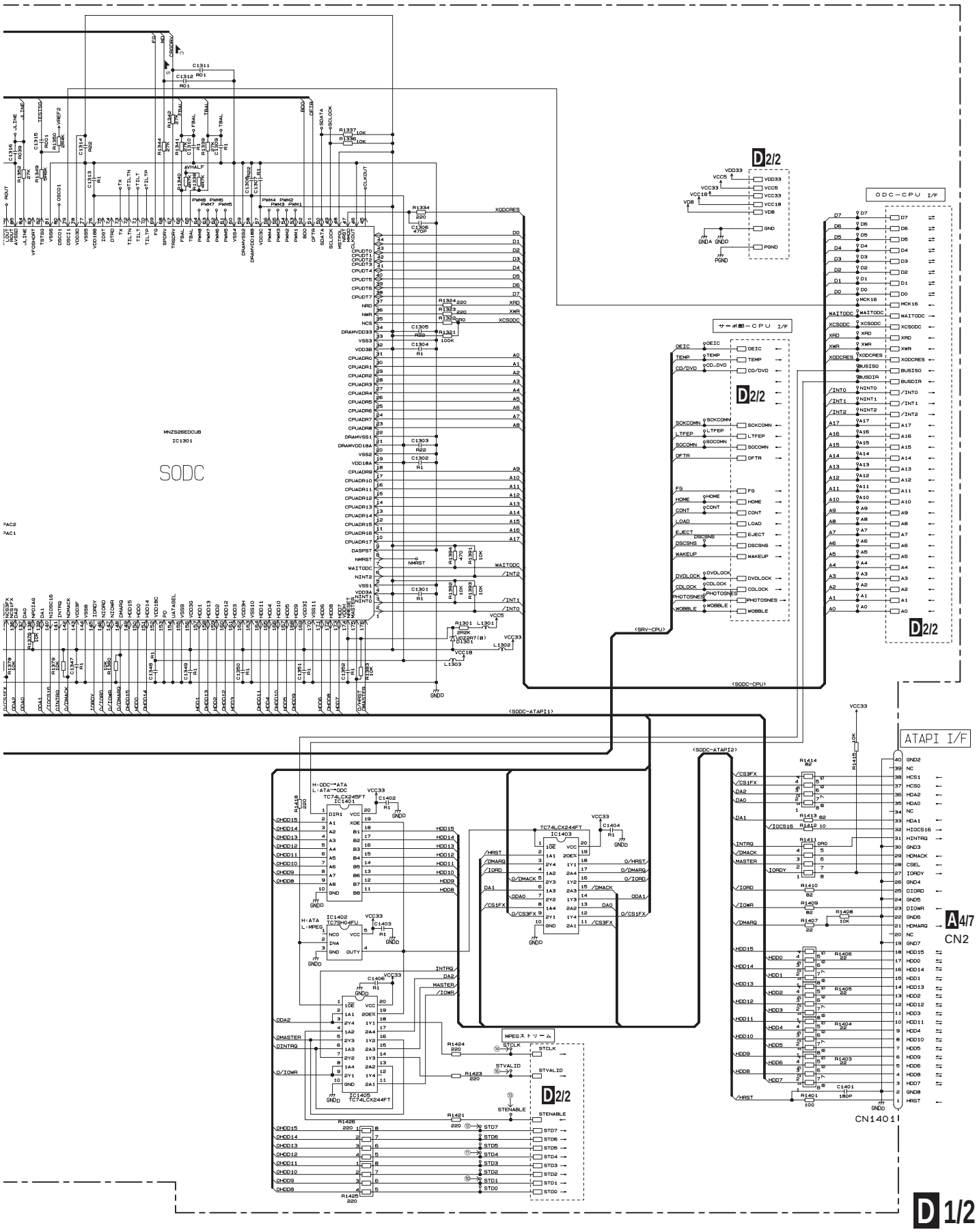

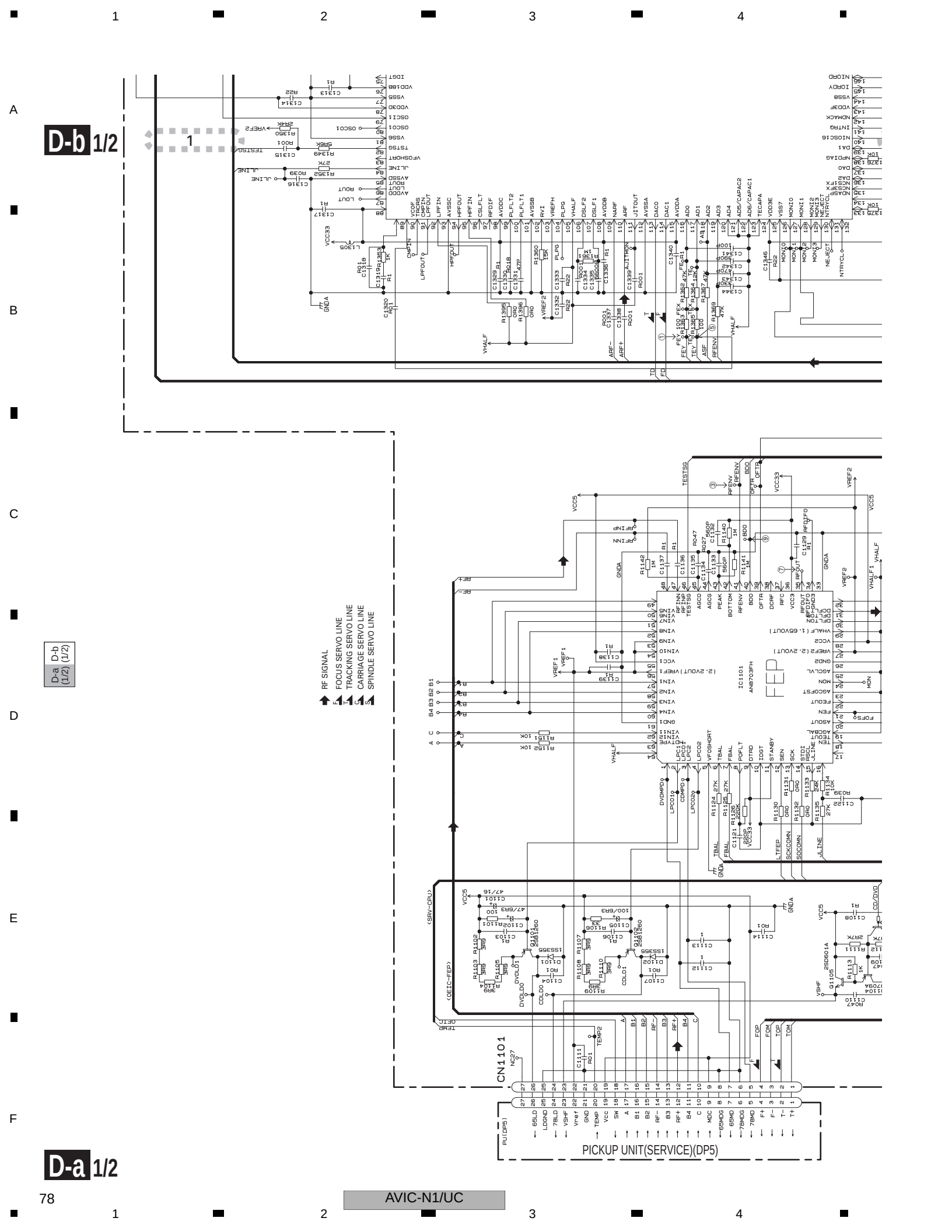
D-b 1/2
D-a 1/2
D-a (1/2) D-b (1/2)
RF SIGNAL
FOCUS SERVO LINE
TRACKING SERVO LINE
CARRIAGE SERVO LINE
SPINDLE SERVO LINE
IC1101
AN8703FH
CN1101
PICKUP UNIT(SERVICE)(DP5)
(SRV-CPU)
(DEIC-FEP)

D-b 1/2

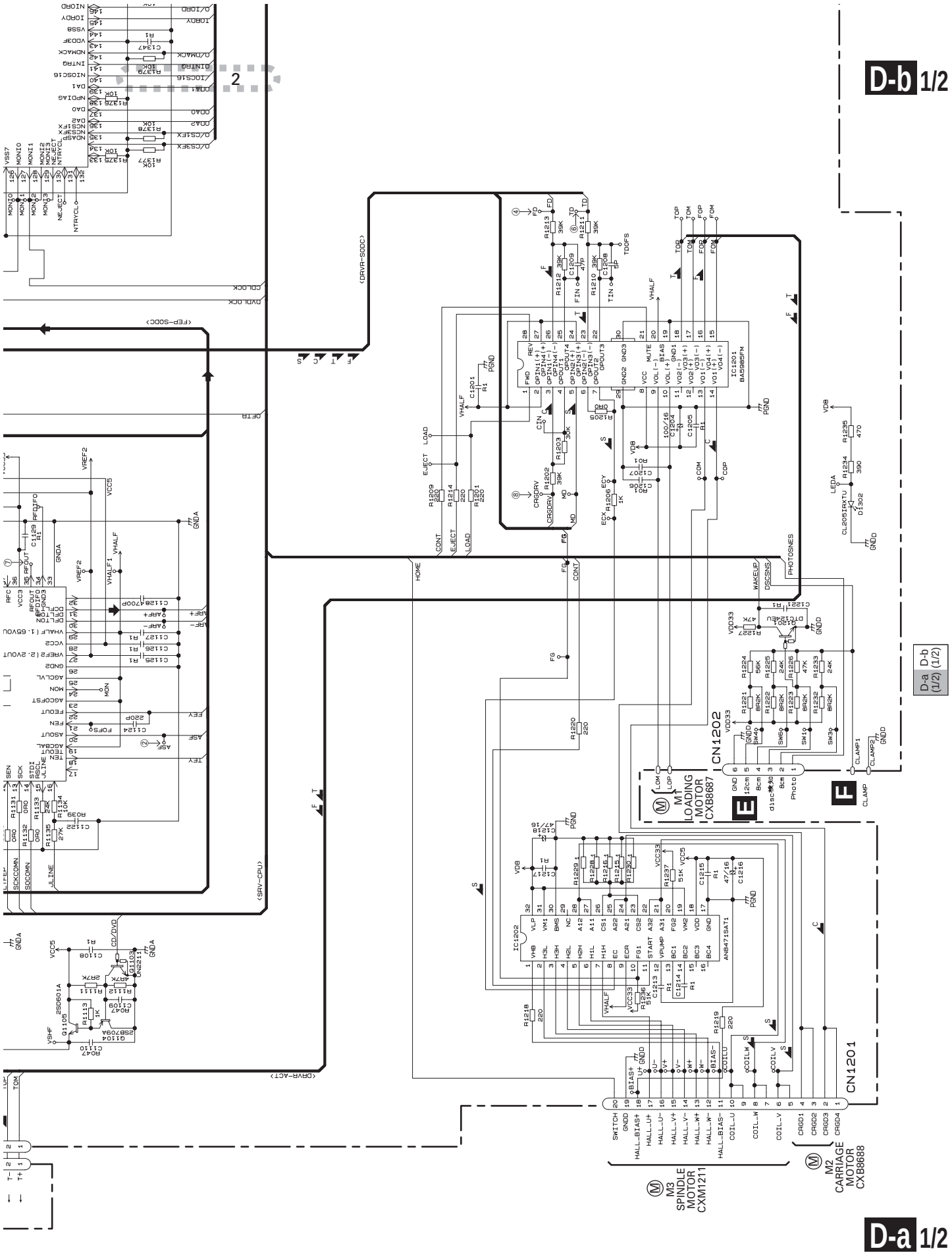
2
IC1201
BA5985FM
IC1202
AN8471SAT1
CN1201
CN1202
<DRVR-SODC>
<FEP-SODC>
<SRV-CPU>
<DRVR-ACT>
Q1201
DTC124EU
D1302
CL205IRXTU
Q1103
UN2211
Q1104
2SB709A
Q1105
2SD601A
M1
LOADING
MOTOR
CXB8687
E
F
GND
12cm
8cm
disc 8cm
Photo
CLAMP
M3
SPINDLE
MOTOR
CXM1211
M2
CARRIAGE
MOTOR
CXB8688
SWITCH
GNDD
HALL_BIAS+
HALL_U+
HALL_U-
HALL_V+
HALL_V-
HALL_W+
HALL_W-
HALL_BIAS-
COIL_U
COIL_W
COIL_V
CRGD1
CRGD2
CRGD3
CRGD4
D-a D-b
(1/2) (1/2)

D-a 1/2

D-a (1/2) D-b (1/2)

D1/2 DVD CORE UNIT(MS3)(SODC)

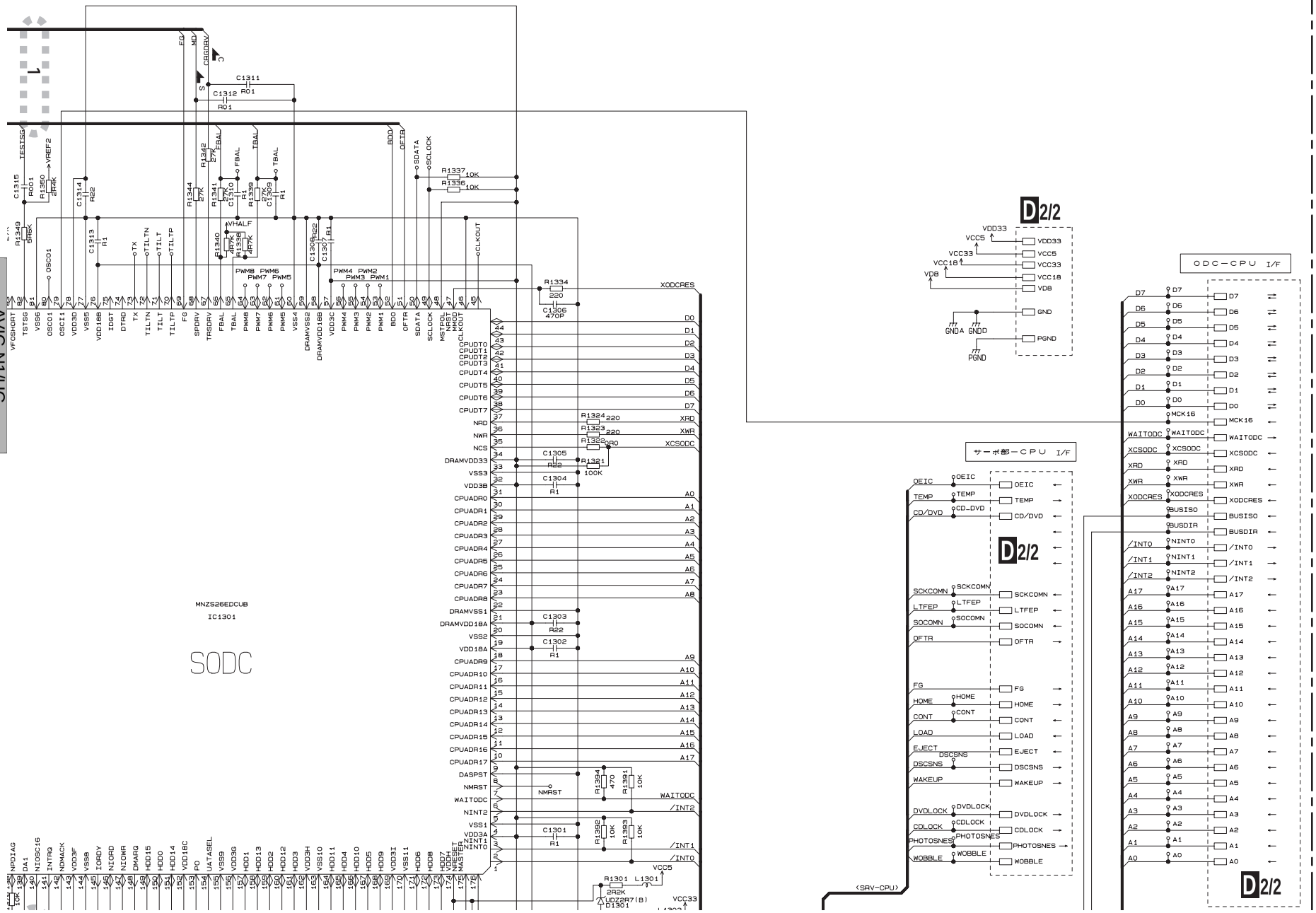

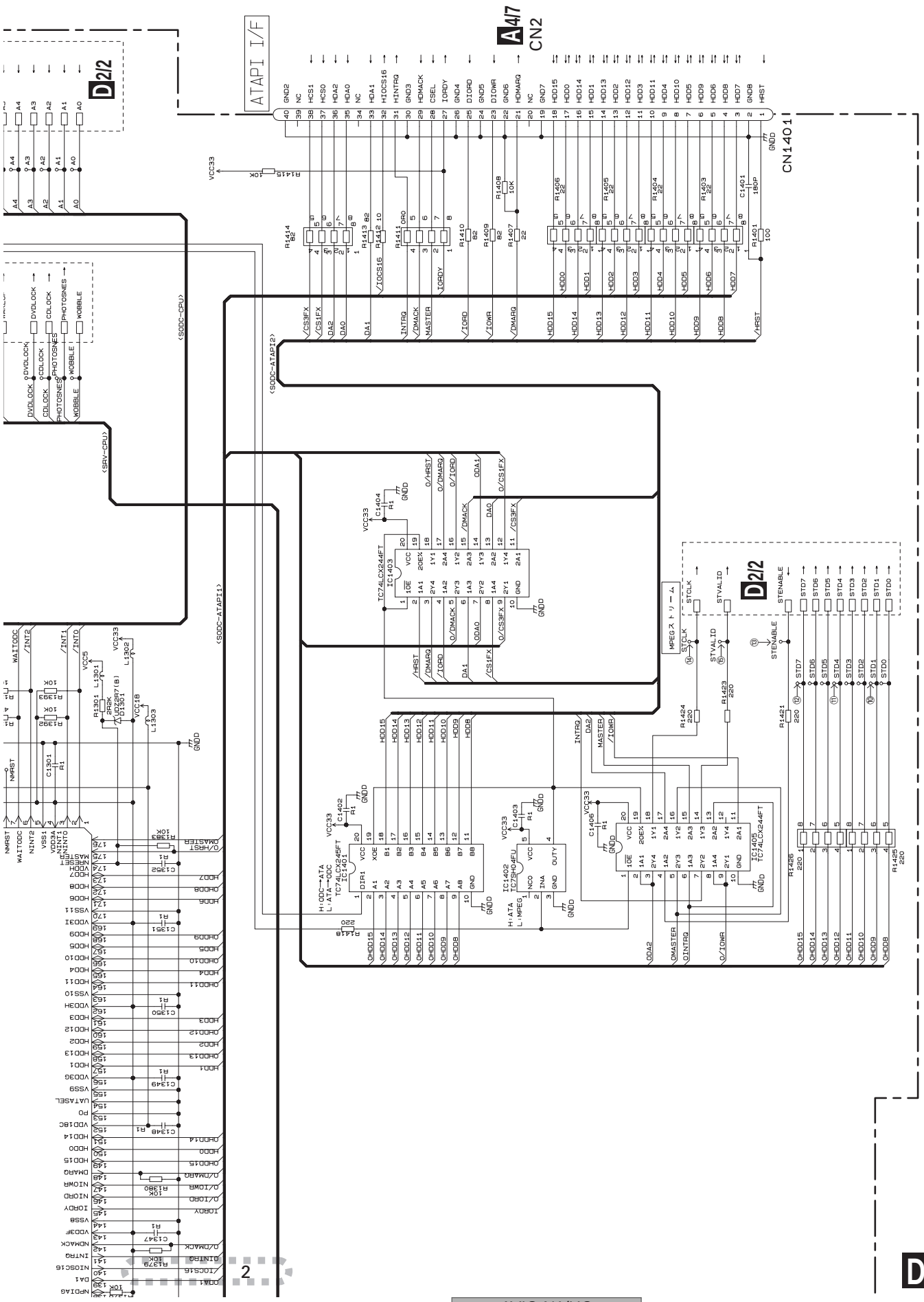
ATAPI I/F
A4/7
CN2
CN1401
D2/2
D-a D-b (1/2)
D-b 1/2
2

3.13 DVD CORE UNIT(MS3)(CPU)(GUIDE PAGE)

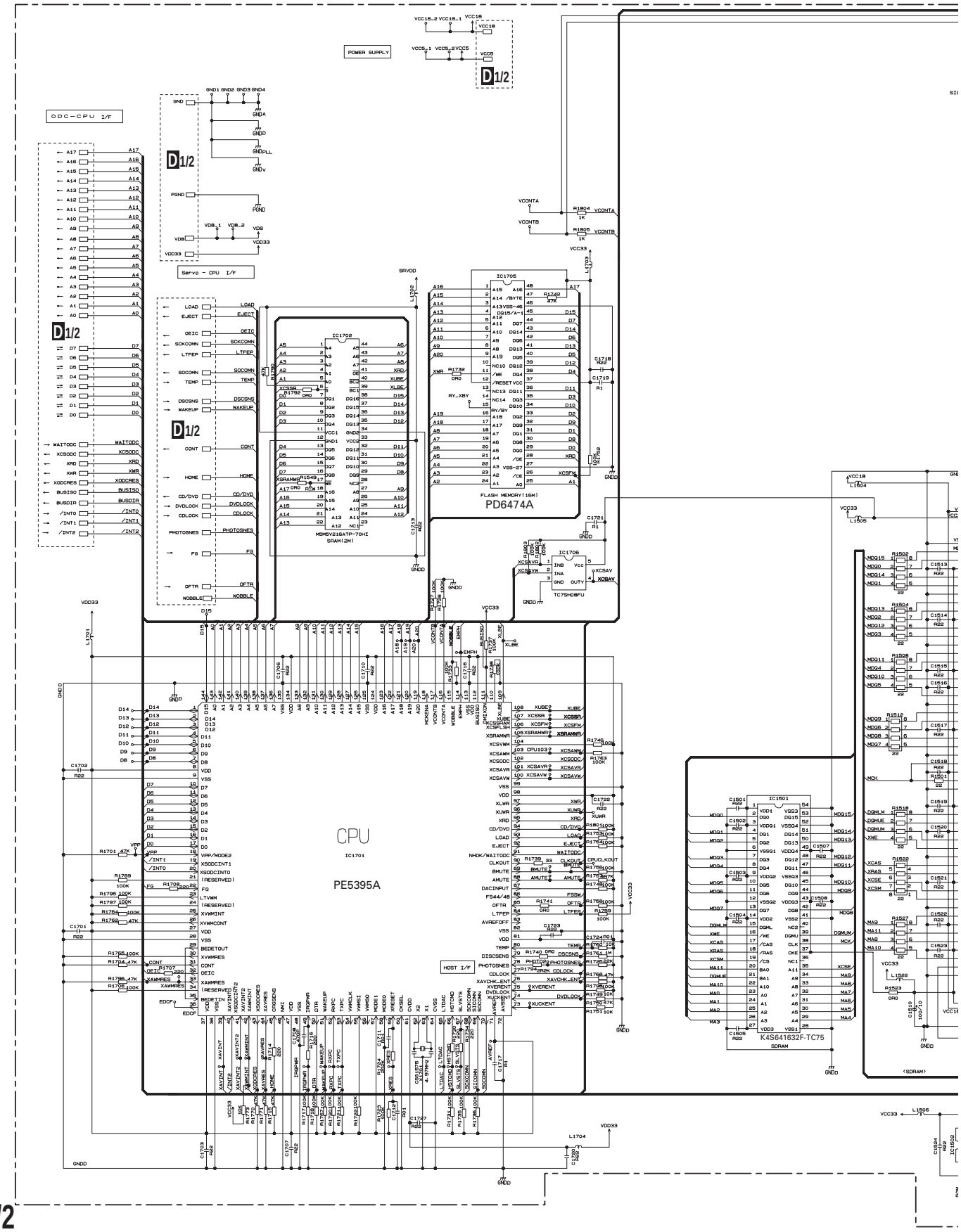

D-b 2/2

D 2/2 DVD CORE UNIT(MS3)(CPU)

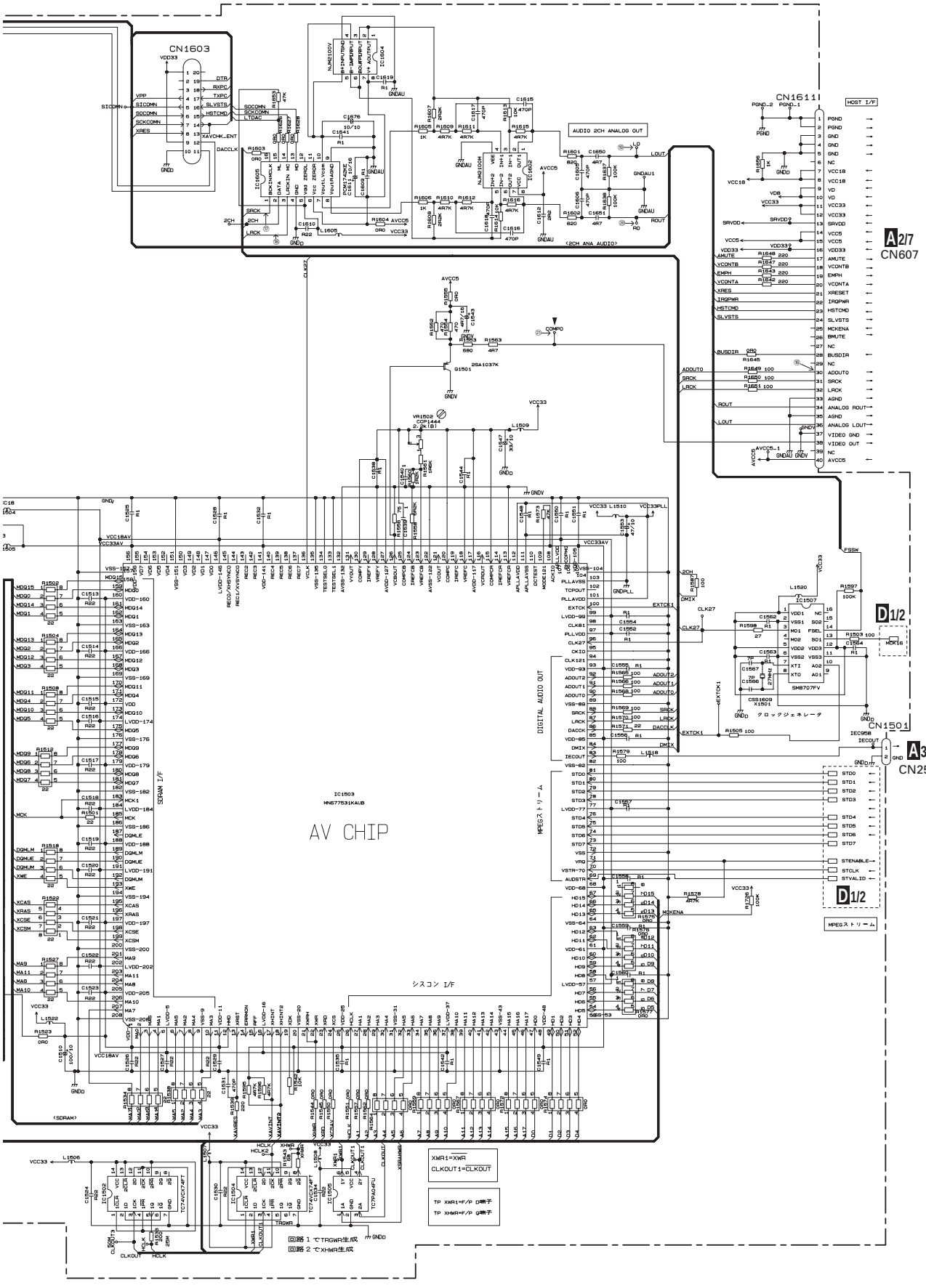

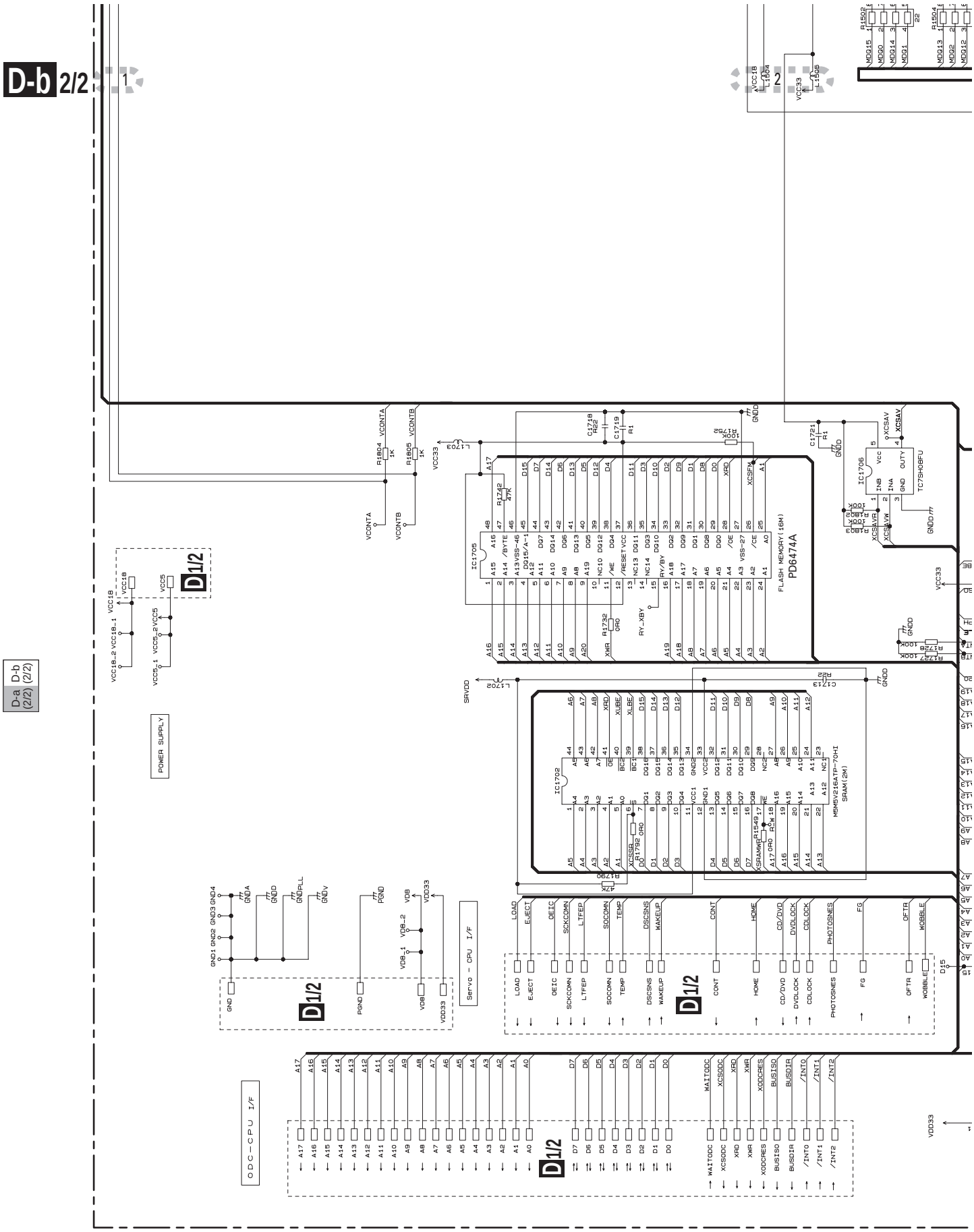
IC1705
FLASH MEMORY(16M)
PD6474A
IC1702
SRAM(2M)
IC1706
TC7SH08FU
D1/2
POWER SUPPLY
Servo - CPU I/F
ODC-CPU I/F
D-a (2/2)
D-b (2/2)

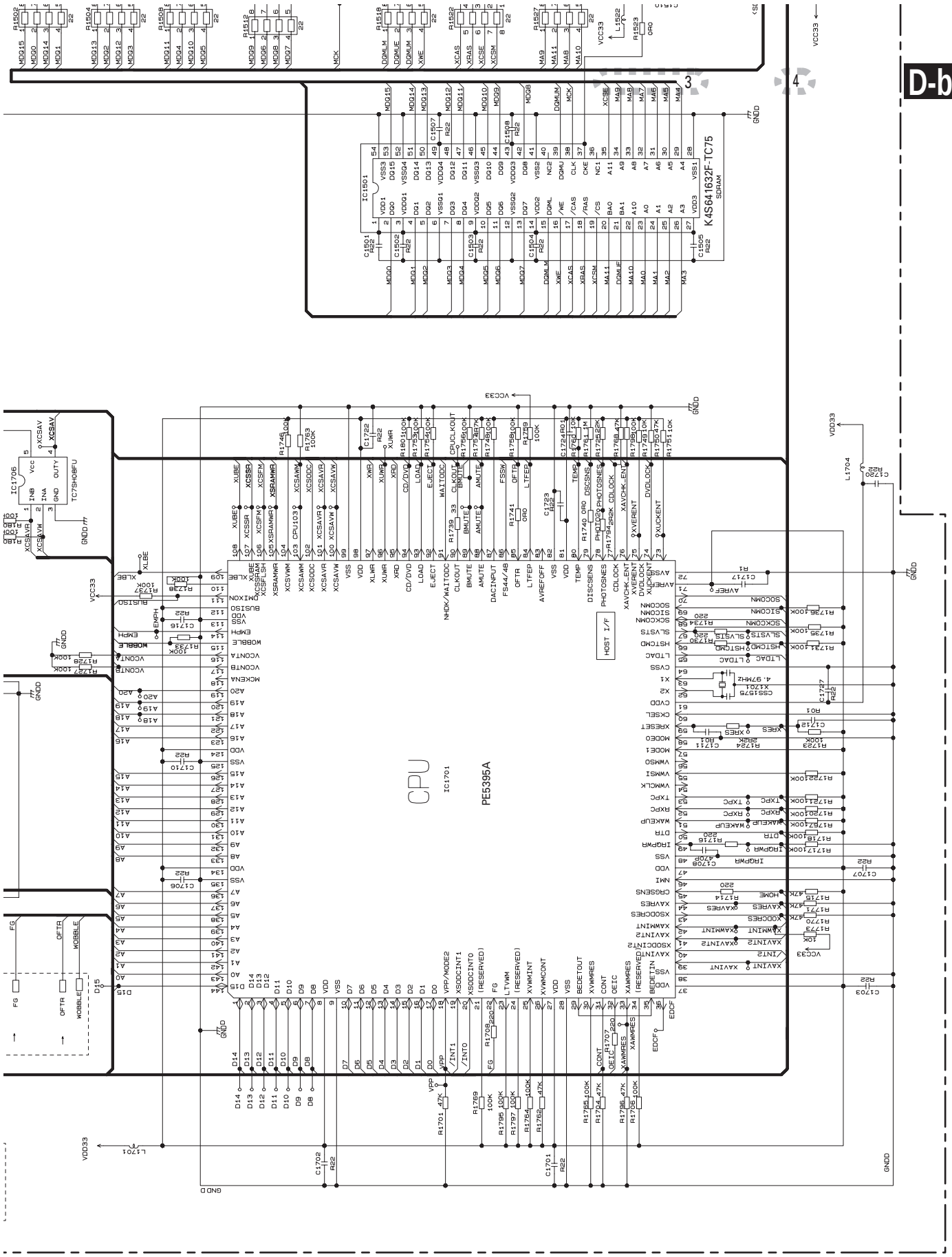
D-b 2/2
D-a 2/2
D-b (2/2)
D-a (2/2)
K4S641632F-TC75
SDRAM
IC1501
CPU
IC1701
PE5395A
HOST I/F
IC1706
TC7SH08FU
VCC33
VDD33
GND
GND D

D-a (2/2) D-b (2/2)

D 2/2 DVD CORE UNIT(MS3)(CPU)

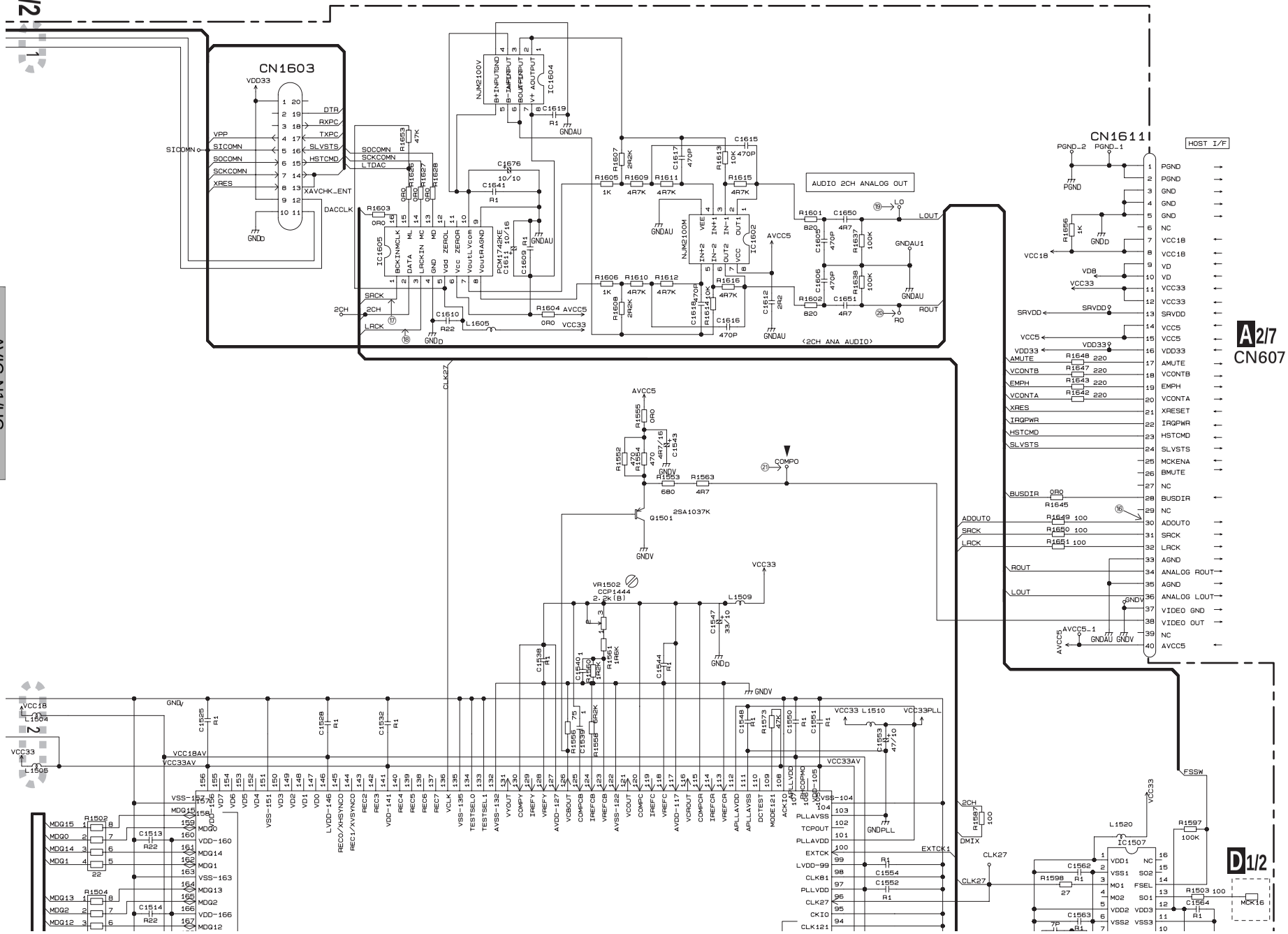

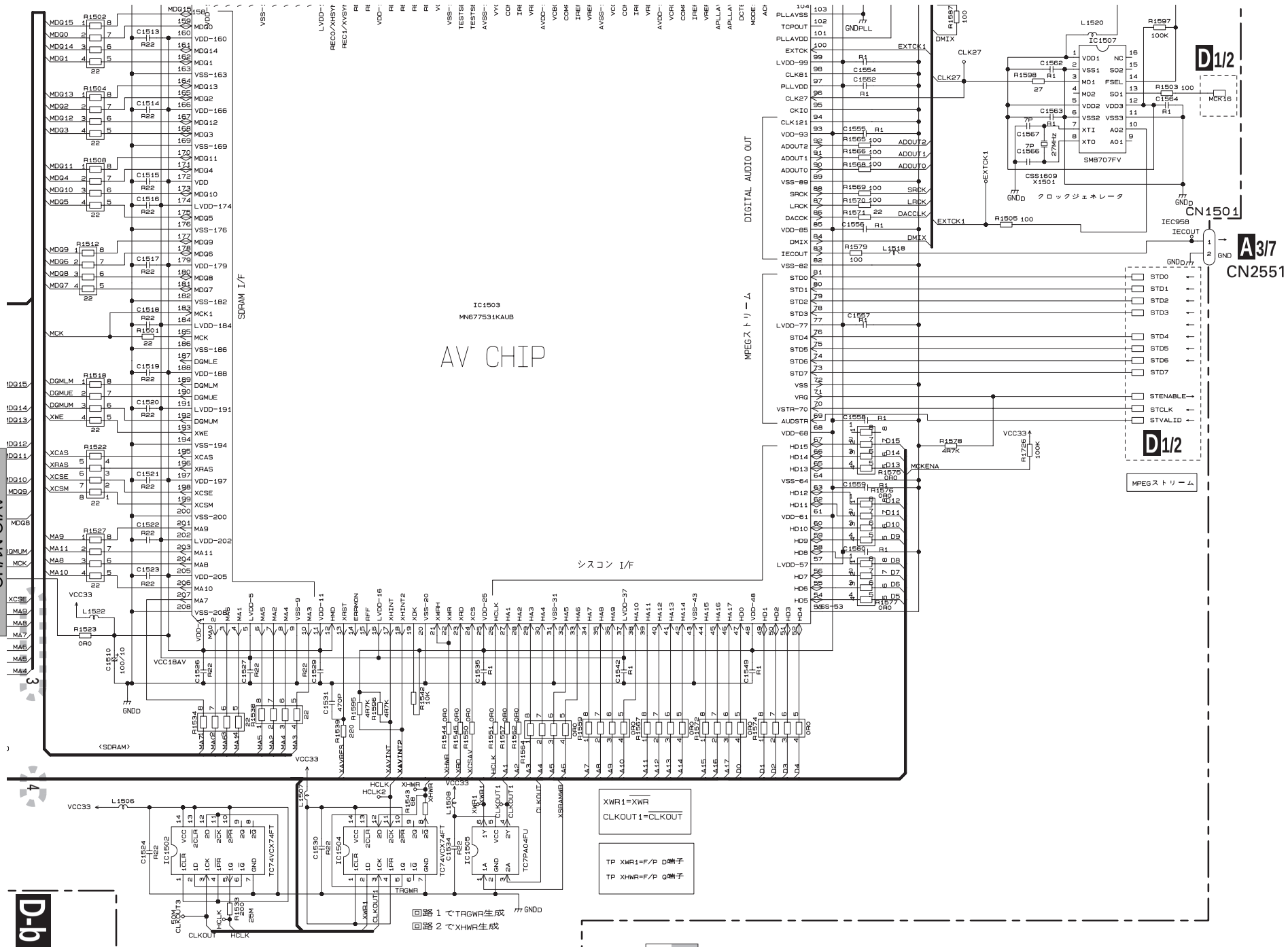
AV CHIP
IC1503
MN677531KAUB
SDRAM I/F
DIGITAL AUDIO OUT
MPEGストリーム
シスコン I/F
SM8707FV
クロックジェネレータ
CN1501
CN2551
D1/2
A3/7
AVIC-N1/UC
D-b 2/2
XWR1=XWR
CLKOUT1=CLKOUT
TP XWR1=F/P D端子
TP XHWR=F/P Q端子
回路 1 でTRGWR生成
回路 2 でXHWR生成
D-a (2/2)
D-b (2/2)

● Waveforms

Note:1. The encircled number denote measuring pointes in the circuit diagram.
2. Reference voltage VHALF : 1.65V

① FEY 500mV/div. 1ms/div.
Focus search

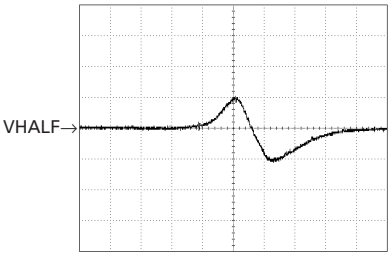

② CH1: ASF
③ CH2: RFENV 200ms/div. 1ms/div.
Focus search

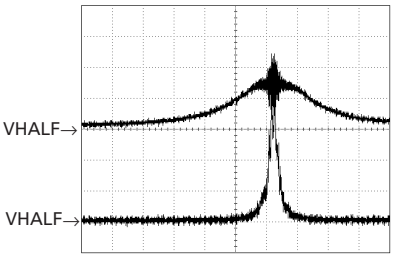

① CH1: FEY 500mV/div. 1ms/div.
④ CH2: FD 1V/div. 1ms/div.
Focus close

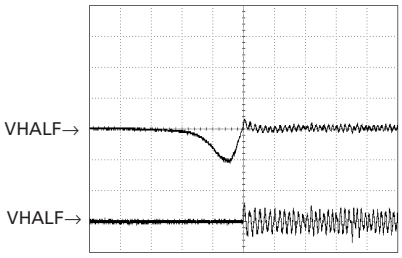

② CH1: ASF
③ CH1: RFENV 200mV/div. 2ms/div.
Focus close

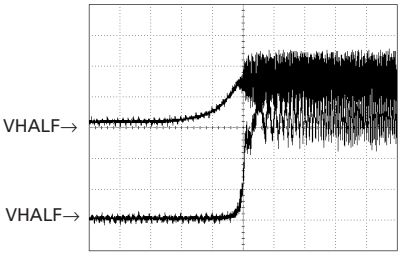

⑤ CH1: TEY 500mV/div. 1ms/div.
Focus close(DVD)

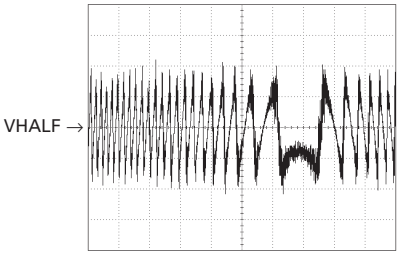

⑤ CH1: TEY 500mV/div. 1ms/div.
Focus close(CD)

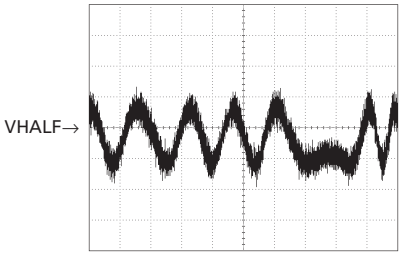

① CH1: FEY
④ CH2: FD 500mV/div.20ms/div.
Play

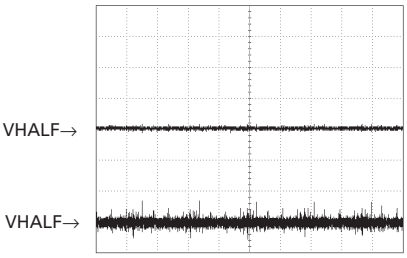

⑤ CH1: TEY
⑥ CH2: TD 500mV/div.20ms/div.
Play

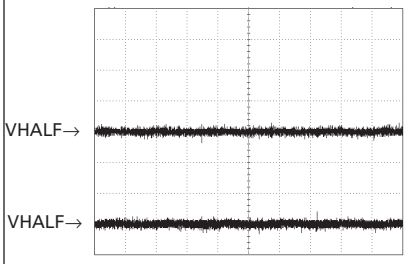

⑦ CH1: RFOUT 0.1V/div. 0.1μs/div.
Play(DVD surroundings on inside)

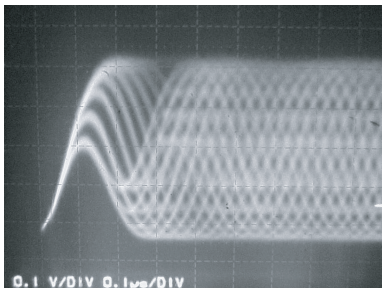

⑦ CH1: RFOUT 0.1V/div. 0.2μs/div.
Play(CD)

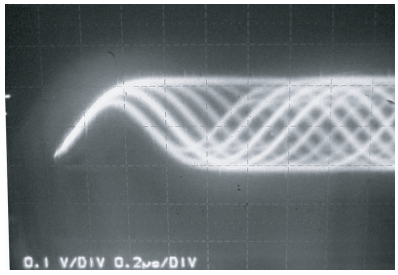

⑤ CH1: TEY 500mV/div. 100ms/div.
⑧ CH2: CRGDRV
Surroundings on inside->
surroundings on outside

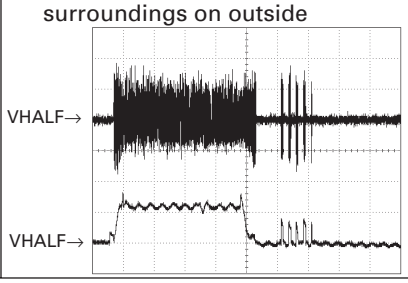

⑦ CH1: RFOUT 200mV/div. 100μs/div.
⑨ CH2: BDO 2V/div. 100μs/div.
Black dot

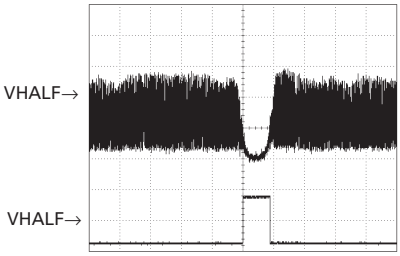

④ CH1: FD 1V/div. 100μs/div.
⑥ CH2: TD 500mV/div. 100μs/div.
Black dot

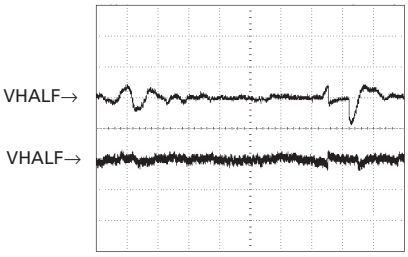

⑤ CH1: TEY 500mV/div.1s/div.
① CH2: FEY
EDC1 mode set up(DVD)

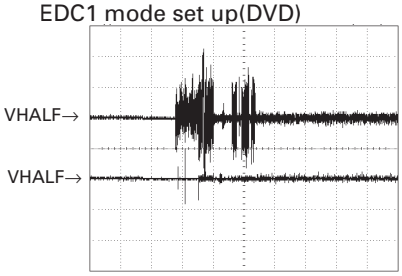

⑩ CH1: STD1
⑪ CH2: STD4 5V/div. 2μs/div.
⑫ CH3: STD7
⑬ CH4: STENABLE

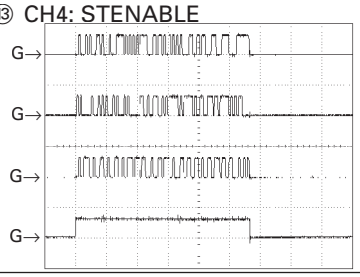

⑭ CH1: STCLK
⑮ CH2: STVALID 5V/div. 2μs/div.
⑬ CH3: STENABLE

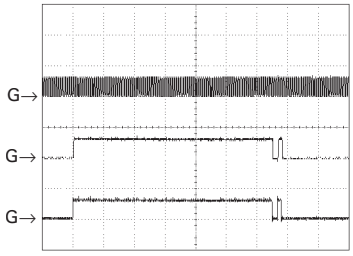

⑭ CH1: STCLK
⑮ CH2: STVALID 5V/div. 50μs/div.
⑬ CH3: STENABLE

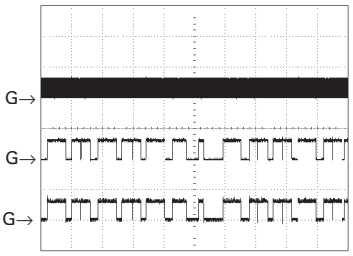

⑯ CH1: ADOUT0
⑰ CH2: SRCK 2V/div. 2μs/div.
⑱ CH3: LRCK

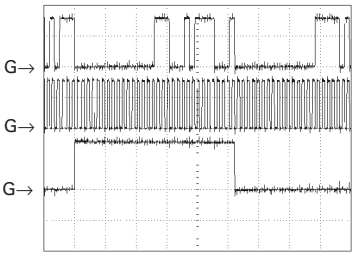

⑲ CH1: LO
⑳ CH2: RO 1V/div. 500μs/div.

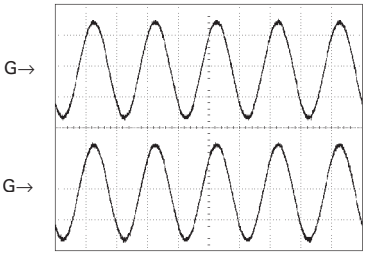

㉑ CH1: COMPO 200mV/div. 10μs/div.
[White 100% output]

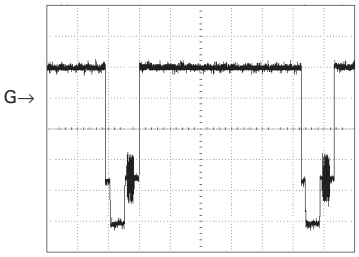

3.14 COMPOUND UNIT(A) AND COMPOUND UNIT(B)

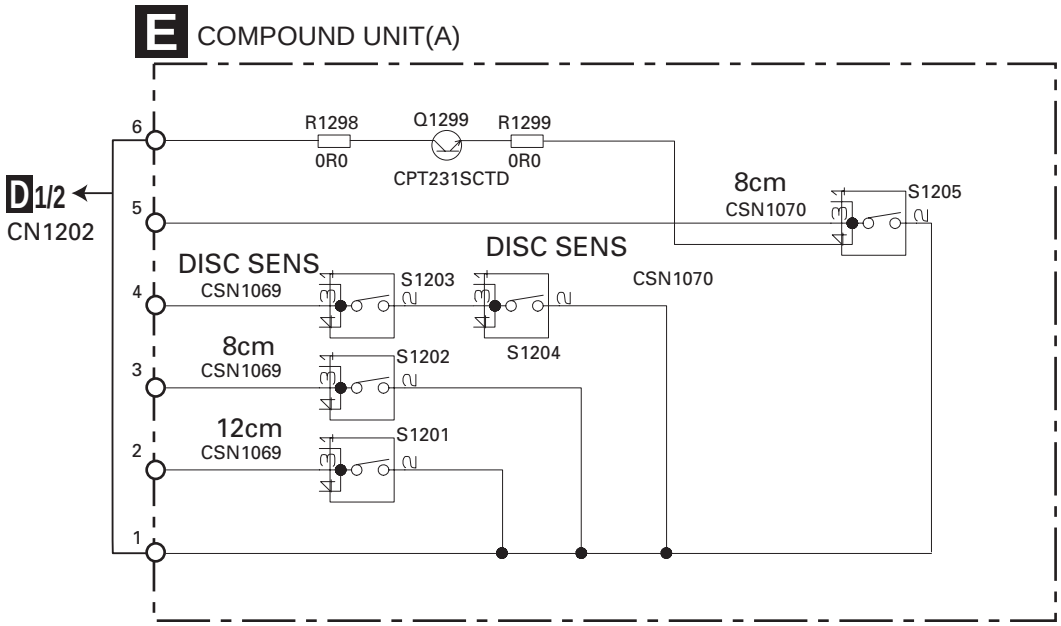

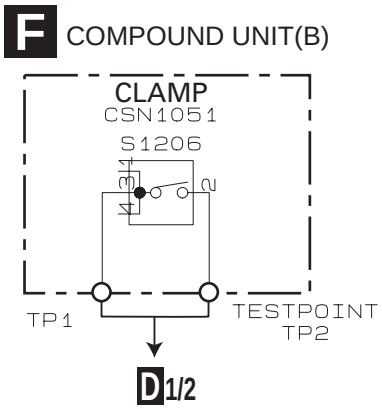

E F

3.15 PU UNIT(REFERENCE)

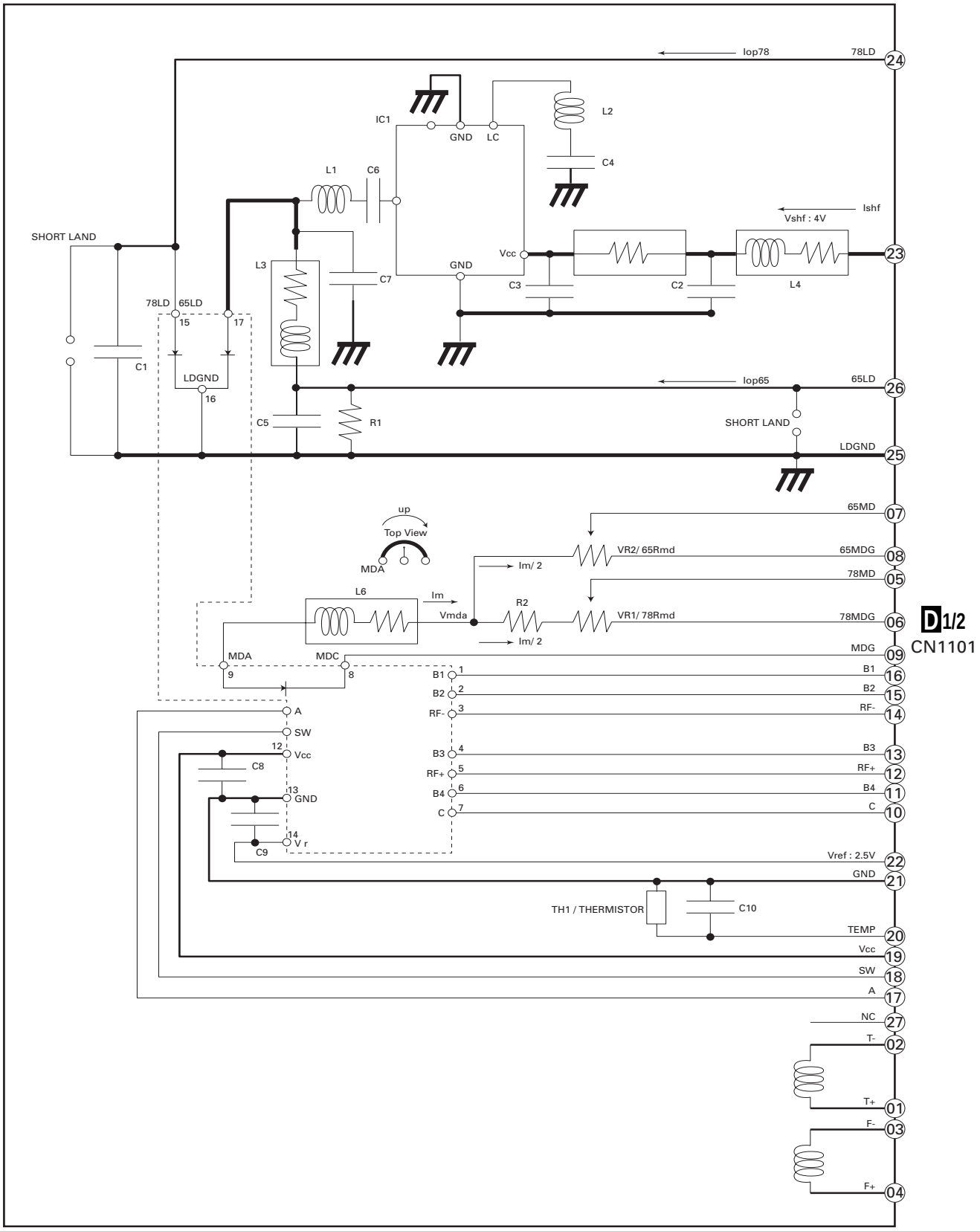

3.16 MONITOR PCB AND UPPER PCB(GUIDE PAGE)

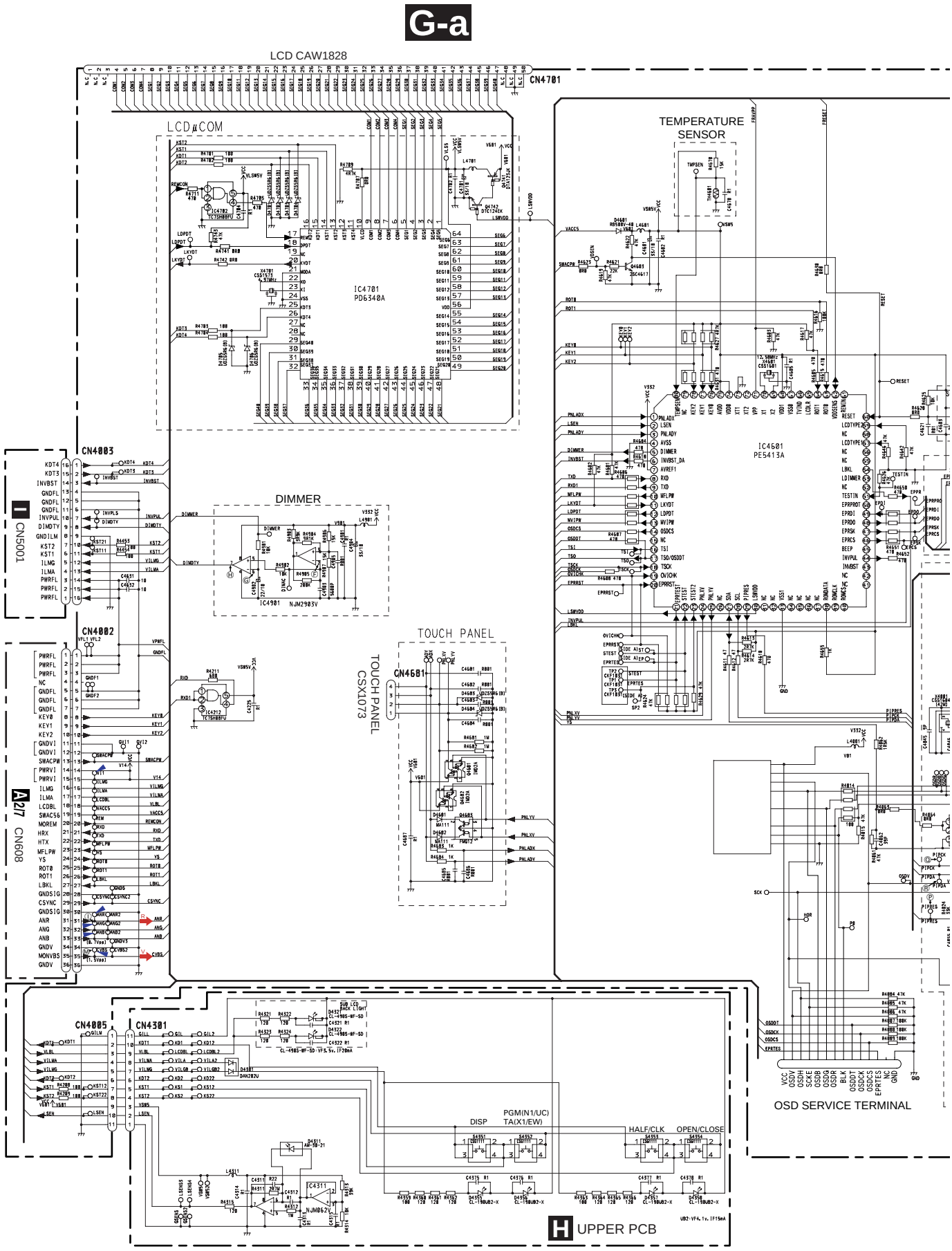

G-b

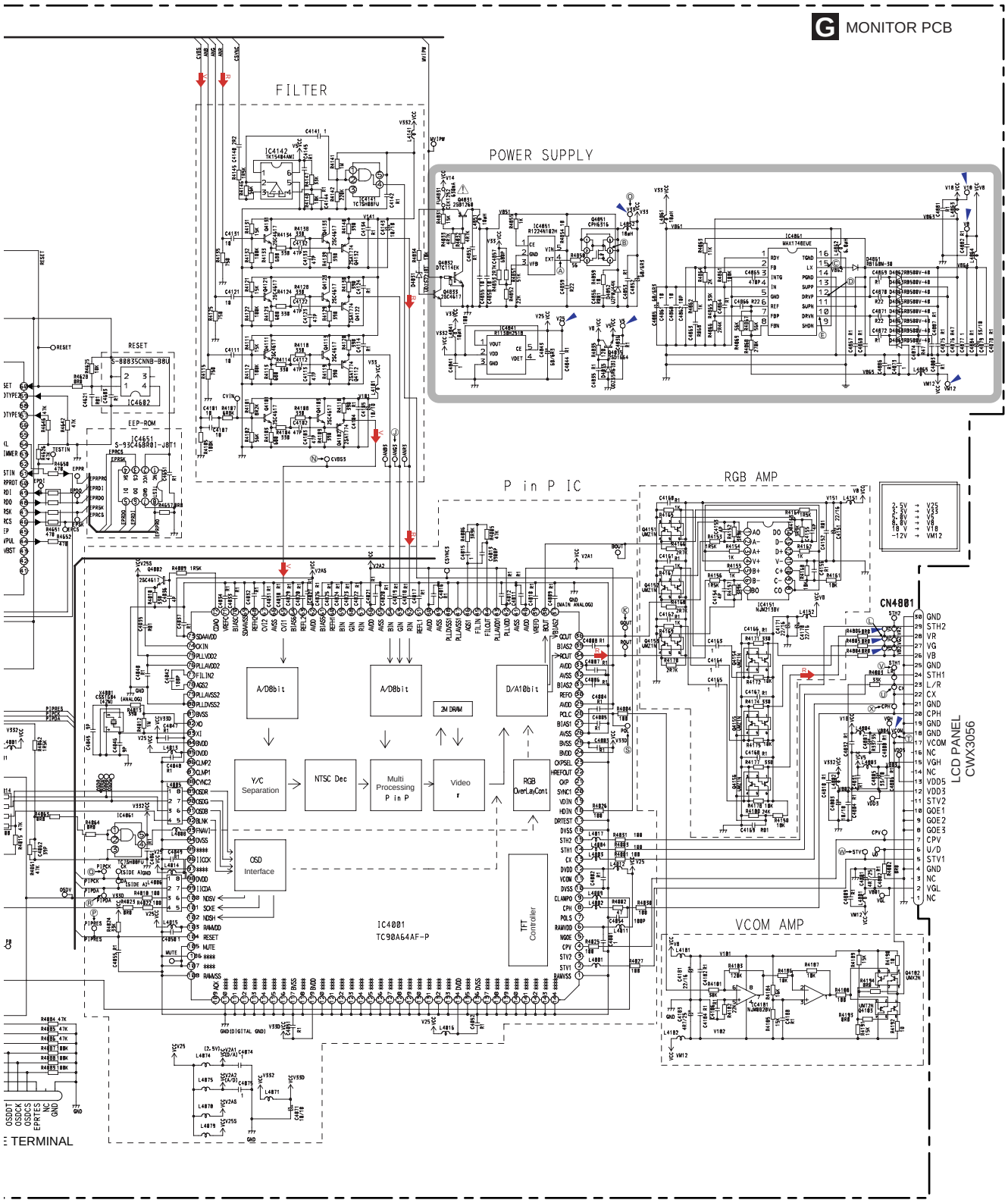

MONITOR UNIT
Consists of MONITOR PCB UPPER PCB INVERTER PCB

V → Composite Video Signal

R → RGB Signal

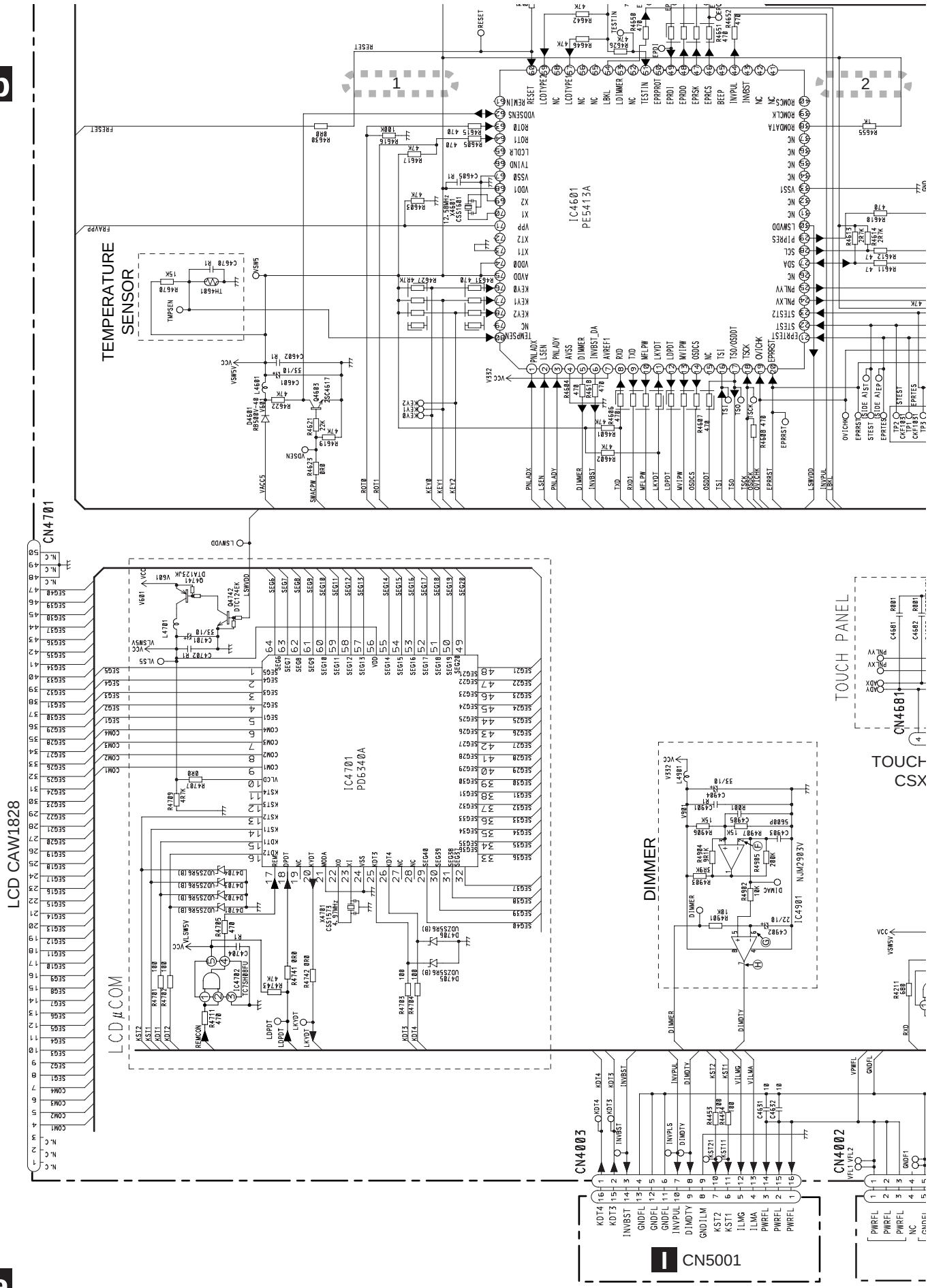
G-b
G-a
TEMPERATURE SENSOR
IC4601 PE5413A
IC4701 PD6340A
LCD CAW1828
LCD µCOM
DIMMER
TOUCH PANEL
CN4701
CN4681
CN4003
CN4002
CN5001

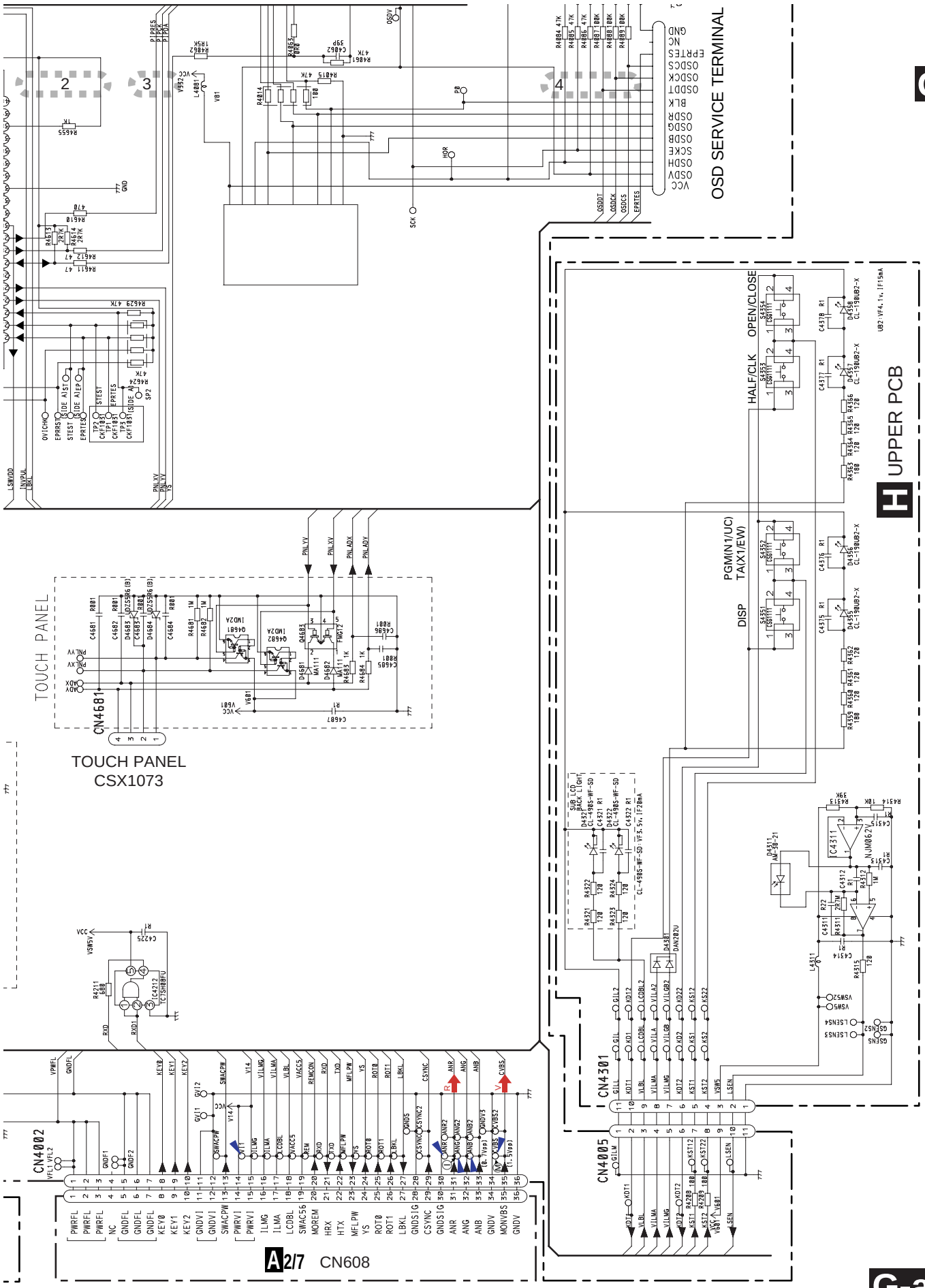
OSD SERVICE TERMINAL
UPPER PCB
TOUCH PANEL
TOUCH PANEL
CSX1073
CN4681
CN4002
CN4301
CN4005
A2/7 CN608
G-b
G-a G-b
G-a H
H
HALF/CLK
OPEN/CLOSE
PGM(N1/UC)
TA(X1/EW)
DISP

G MONITOR PCB

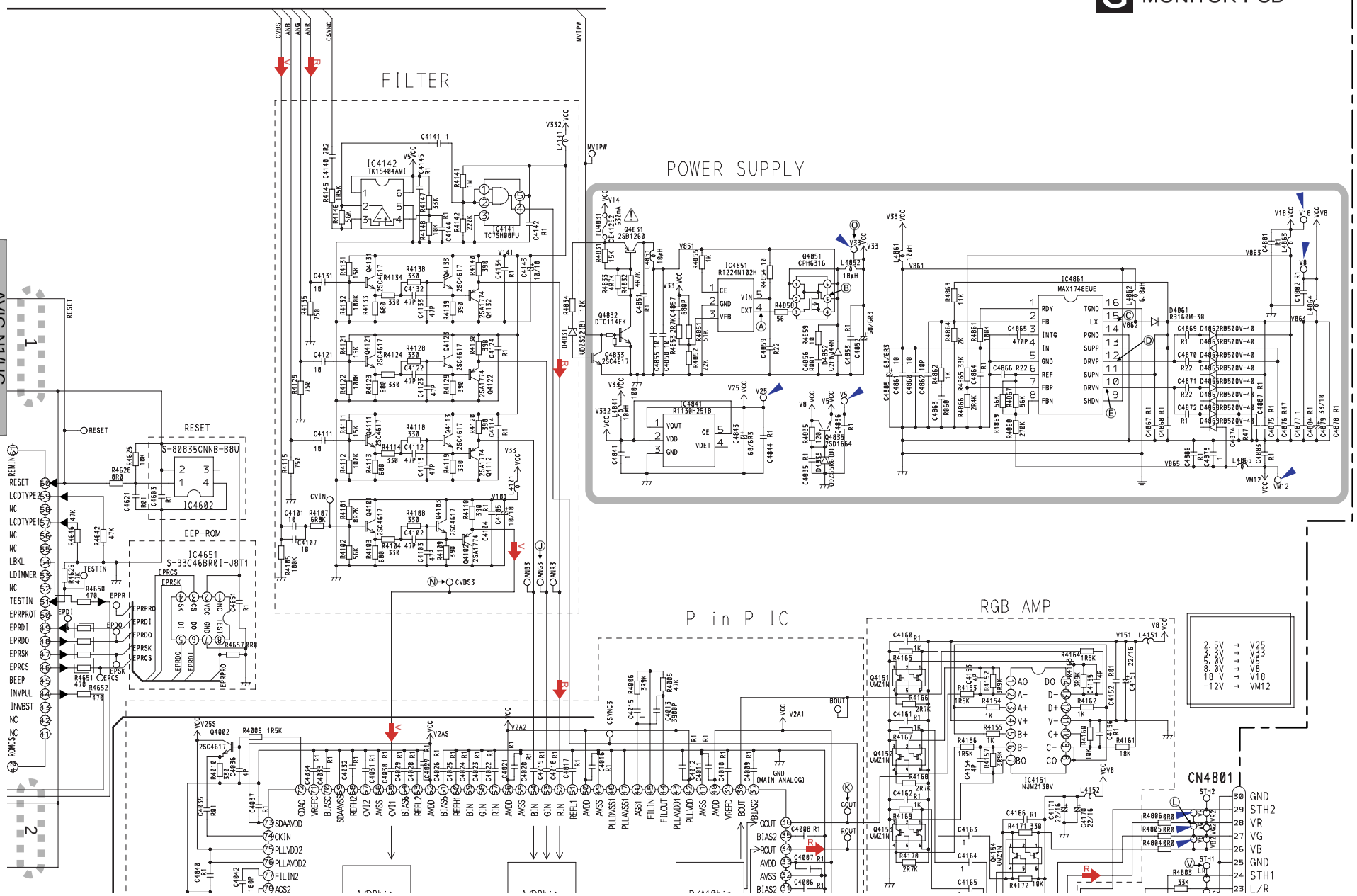

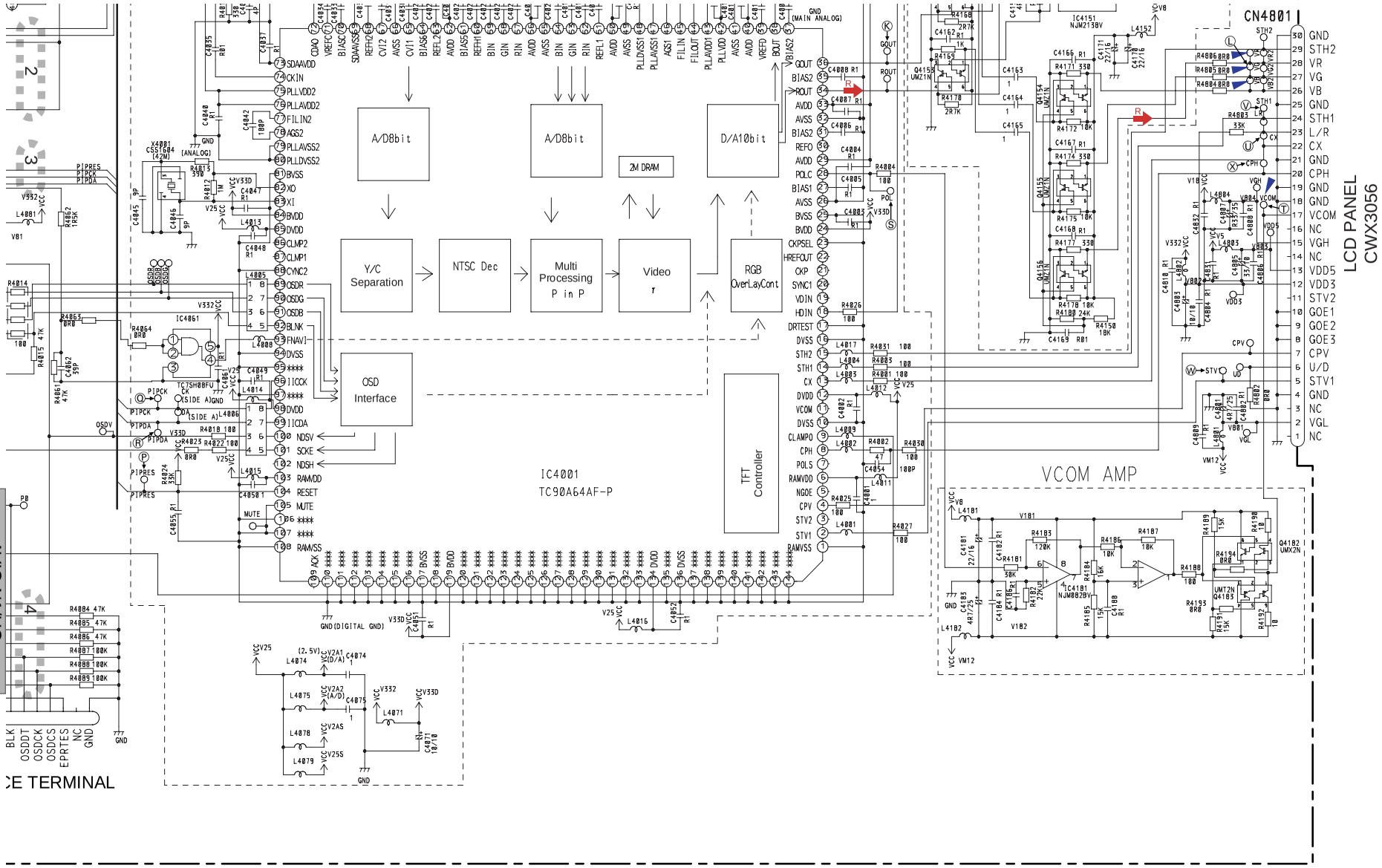

MONITOR UNIT
Consists of
MONITOR PCB
UPPER PCB
INVERTER PCB

V Composite Video Signal

R RGB Signal

G-a G-b

● Waveforms

The encircled number denote measuring pointes in the circuit diagram.

Ⓐ CH1:IC4851 Pin 4
Ⓑ CH2:Q4851 Pin 5

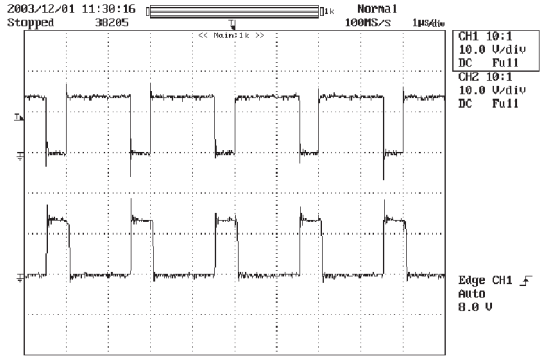

• INPUT : Color bar signal

Ⓘ CH1:ANG
Ⓙ CH2:ANG3
Ⓚ CH3:GOUT
Ⓛ CH4:VG

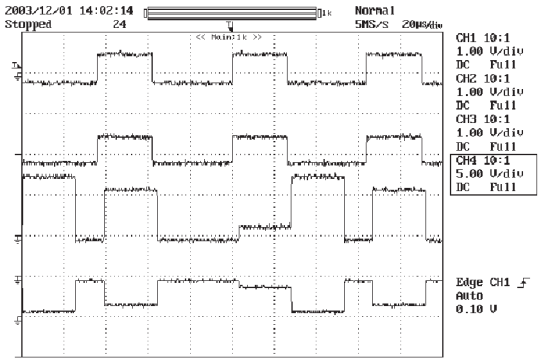

Ⓒ CH1:IC4861 Pin 15
Ⓓ CH2:IC4861 Pin 12
Ⓔ CH3:IC4861 Pin 10

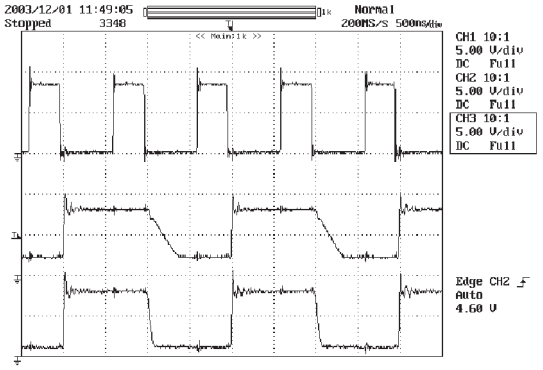

• INPUT : 10STEP VTR IN

Ⓜ CH1:CVBS
Ⓝ CH2:CVBS3
Ⓚ CH3:GOUT
Ⓛ CH4:VG

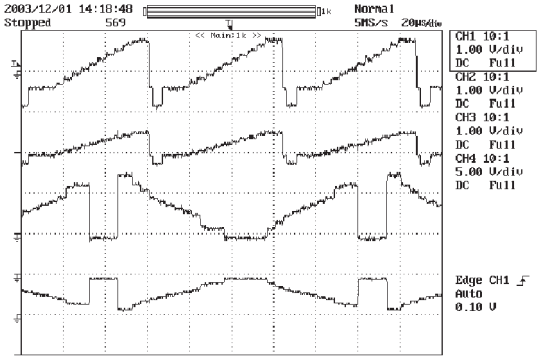

Ⓕ CH1:IC4901 Pin 2
Ⓖ CH2:IC4901 Pin 6
Ⓗ CH3:IC4901 Pin 7

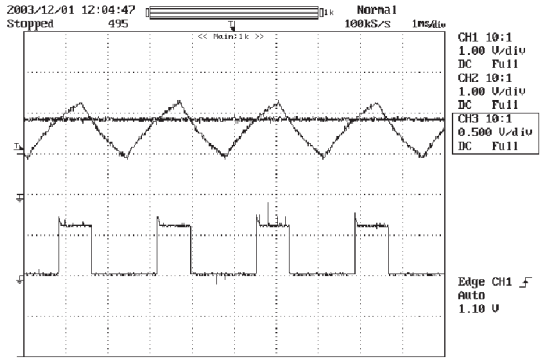

Ⓞ CH1:V33
Ⓟ CH2:PIPRES
Ⓠ CH3:PIPCK
Ⓡ CH4:PIPDA

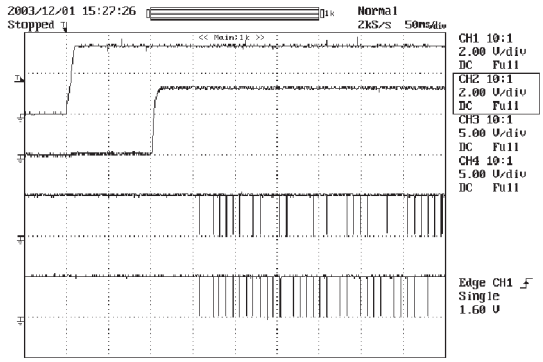

Ⓞ CH1:V33
Ⓟ CH2:PIPRES
Ⓠ CH3:PIPCK
Ⓡ CH4:PIPDA

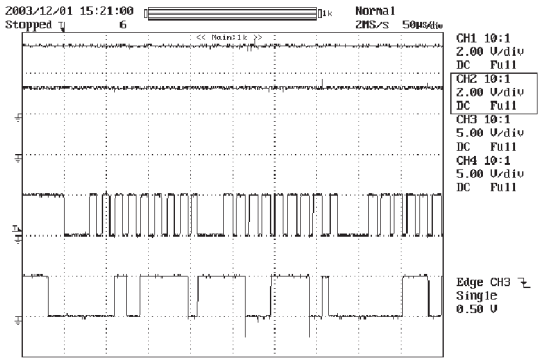

Ⓜ CH1:CVBS
Ⓤ CH2:CX
Ⓦ CH3:STV1
Ⓛ CH4:VG

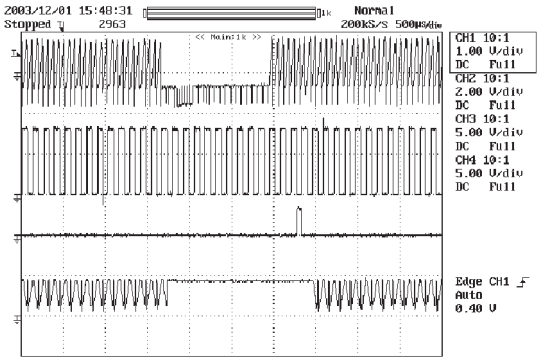

Ⓜ CH1:CVBS
Ⓢ CH2:POL
Ⓣ CH3:VCOM
Ⓛ CH4:VG

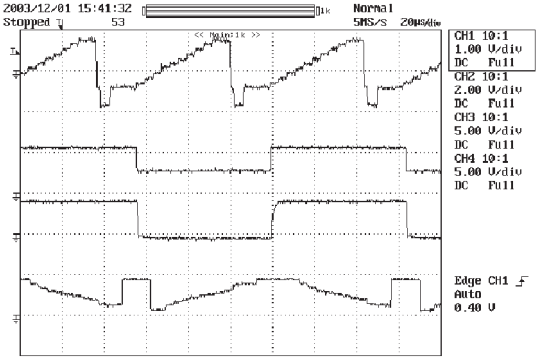

Ⓜ CH1:CVBS
Ⓧ CH3:CPH
Ⓛ CH4:VG

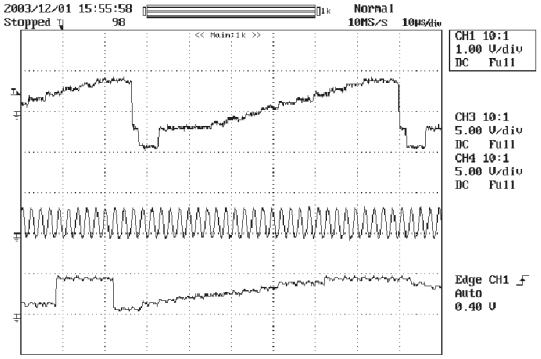

Ⓜ CH1:CVBS
Ⓤ CH2:CX
Ⓥ CH3:STH1
Ⓛ CH4:VG

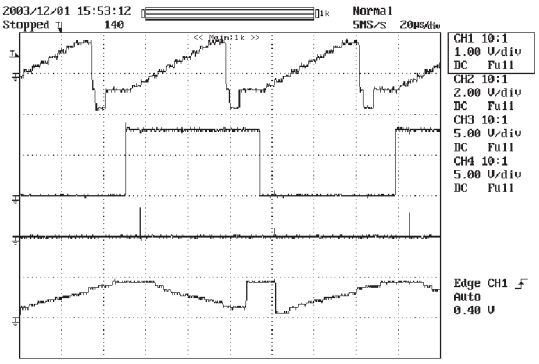

3.17 INVERTER PCB

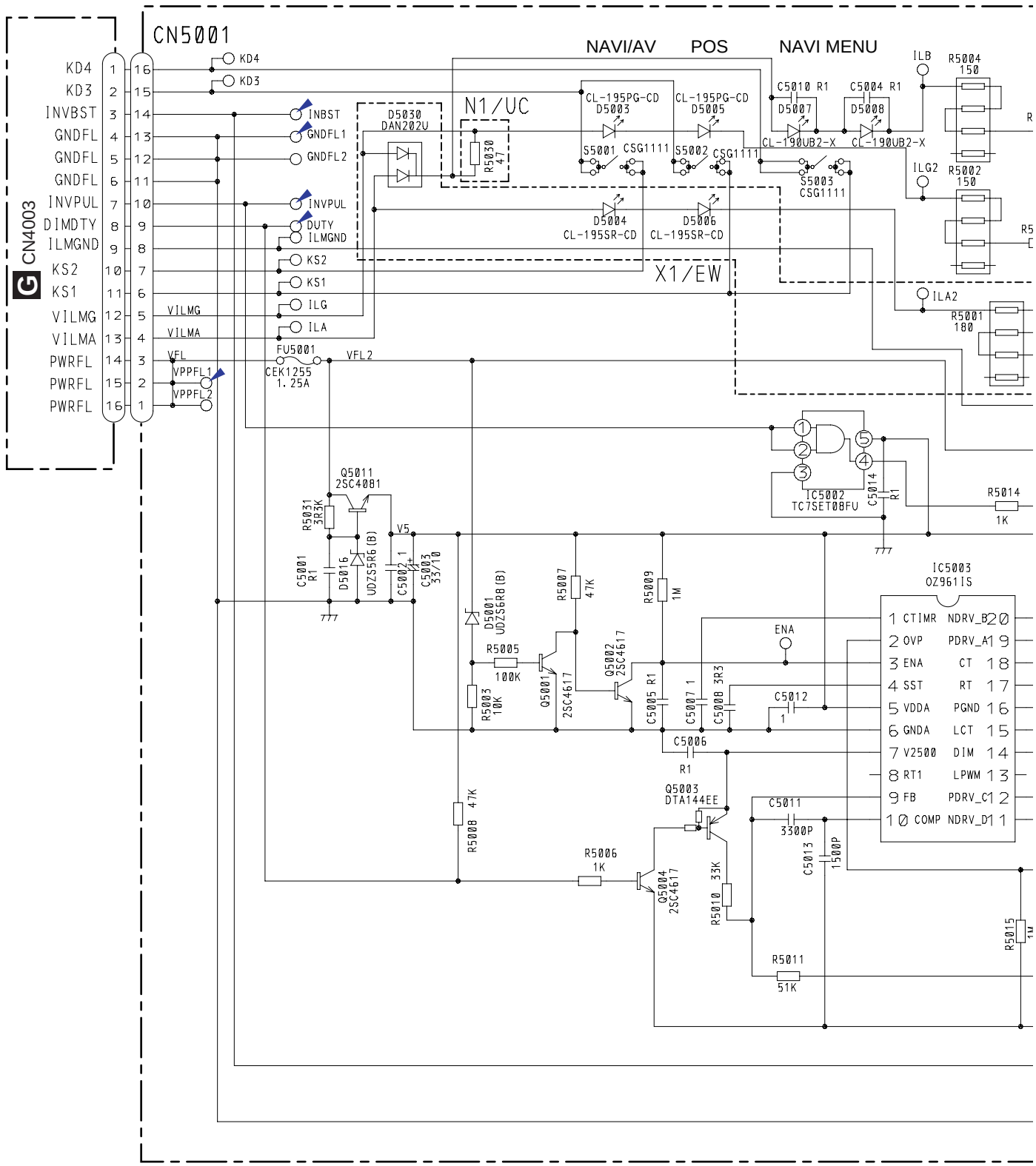

MONITOR UNIT
Consists of
MONITOR PCB
UPPER PCB
INVERTER PCB

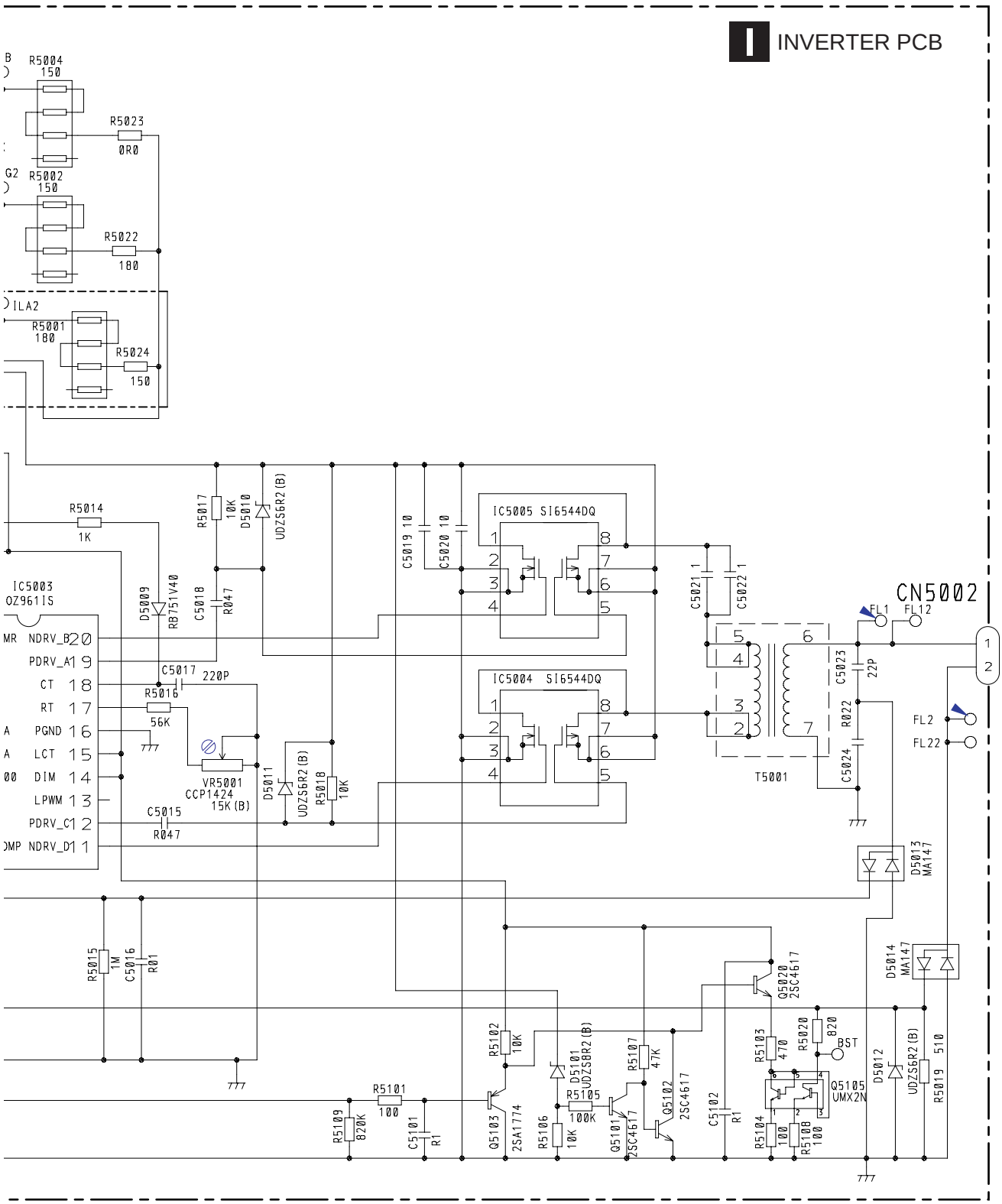

3.18 RELAY PCB

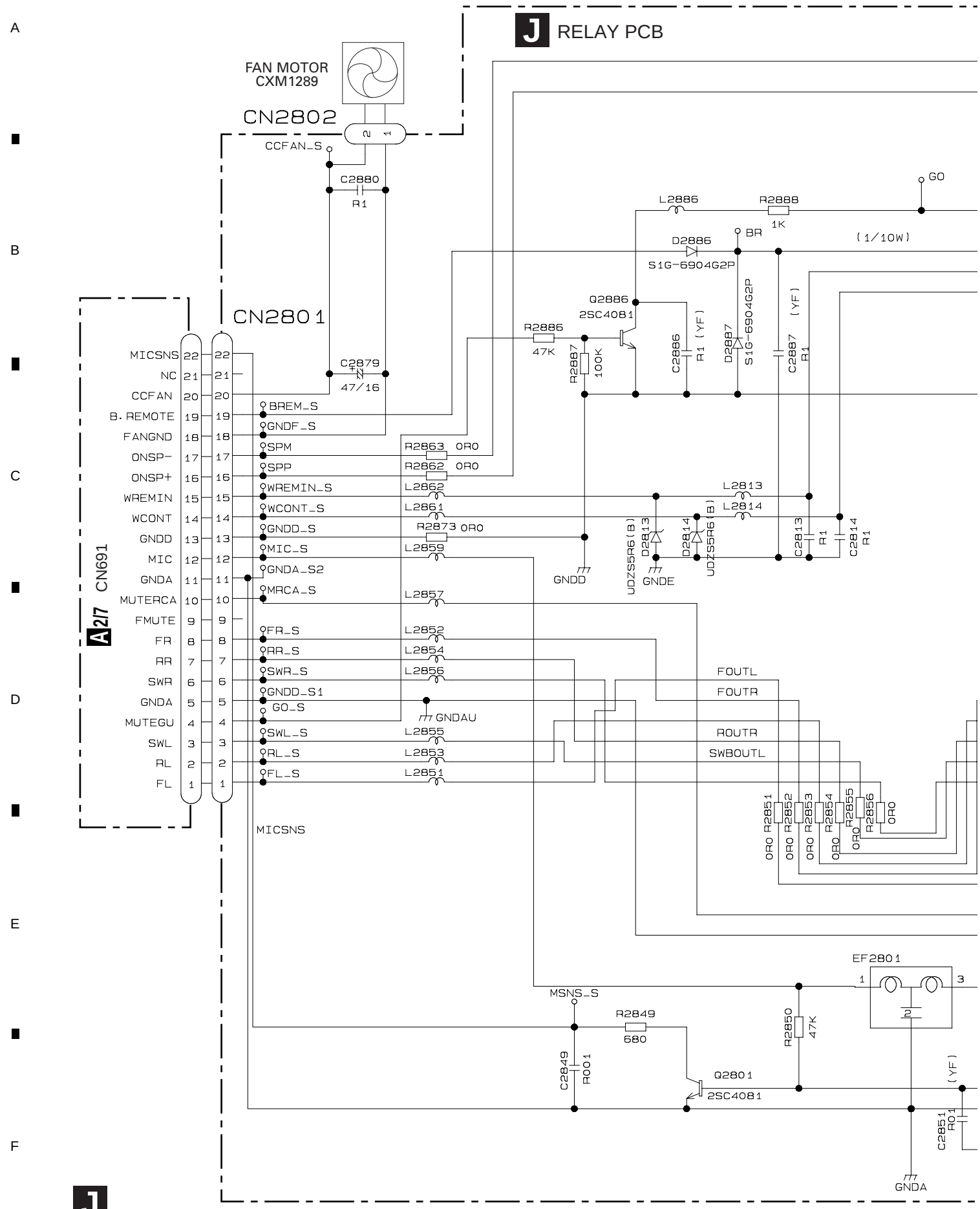

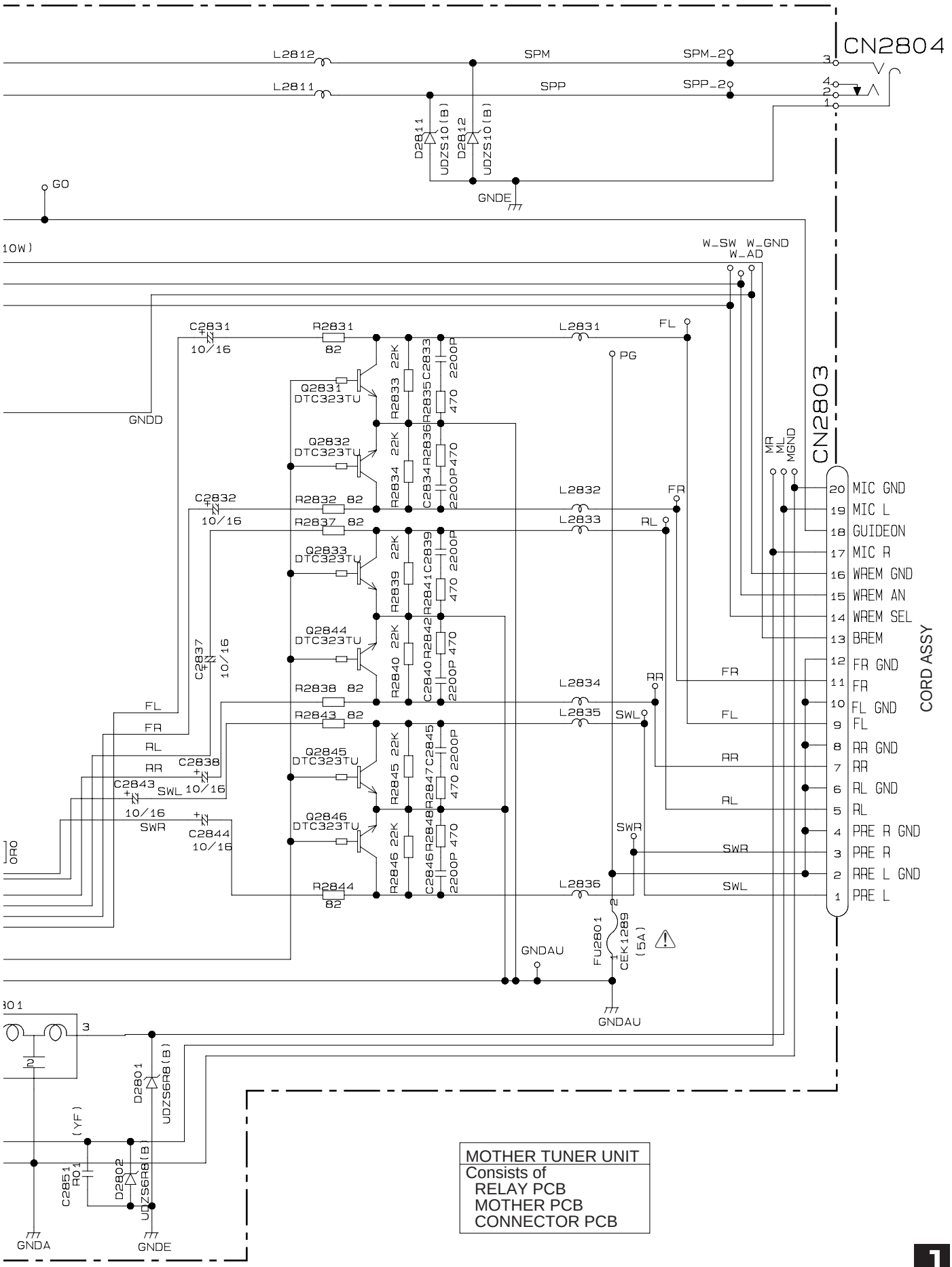
CN2804
L2812
L2811
SPM
SPP
SPM_2
SPP_2
D2811
D2812
UDZS10(B)
GNDE
GO
W_SW
W_GND
W_AD
C2831
10/16
R2831
82
Q2831
DTC323TU
Q2832
DTC323TU
Q2833
DTC323TU
Q2844
DTC323TU
Q2845
DTC323TU
Q2846
DTC323TU
R2833 22K
R2834 22K
R2839 22K
R2840 22K
R2845 22K
R2846 22K
C2833 2200P
C2834 2200P
C2839 2200P
C2840 2200P
C2845 2200P
C2846 2200P
470
L2831
L2832
L2833
L2834
L2835
L2836
FL
FR
RL
RR
SWL
SWR
PG
GNDD
C2832
R2832 82
R2837 82
C2837
C2838
C2843
C2844
R2838 82
R2843 82
R2844
GNDAU
FU2801
CEK1289
(5A)
CN2803
MR
ML
MGND
MIC GND
MIC L
GUIDEON
MIC R
WREM GND
WREM AN
WREM SEL
BREM
FR GND
FR
FL GND
FL
RR GND
RR
RL GND
RL
PRE R GND
PRE R
RRE L GND
PRE L
CORD ASSY
D2801
UDZS6R8(B)
D2802
C2851
R01
(YF)
GNDA
GNDE
MOTHER TUNER UNIT
Consists of
RELAY PCB
MOTHER PCB
CONNECTOR PCB

3.19 MOTHER PCB (H/A SYSTEM)(GUIDE PAGE)

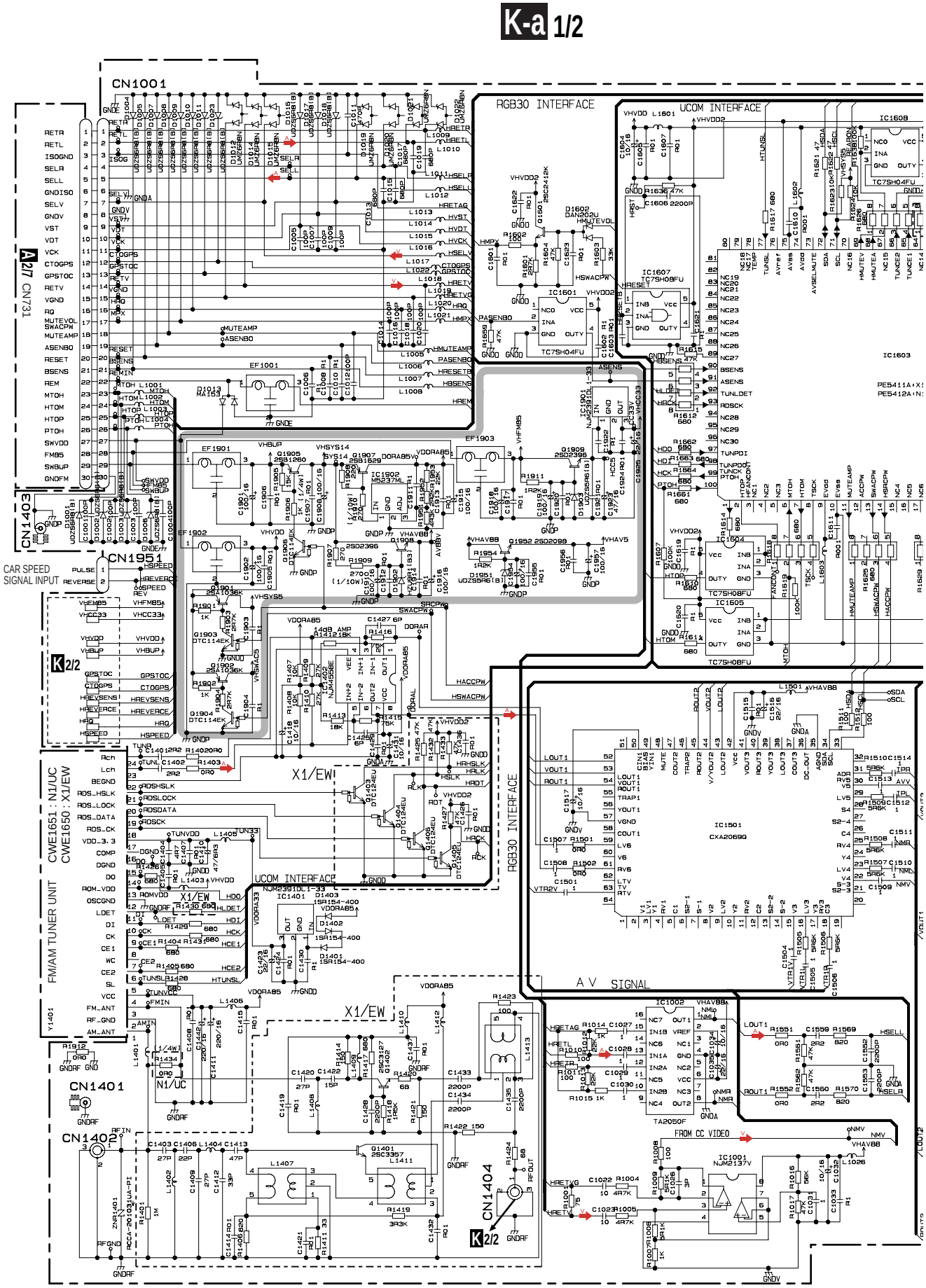

K-b 1/2

K 1/2 MOTHER PCB (H/A SYSTEM)

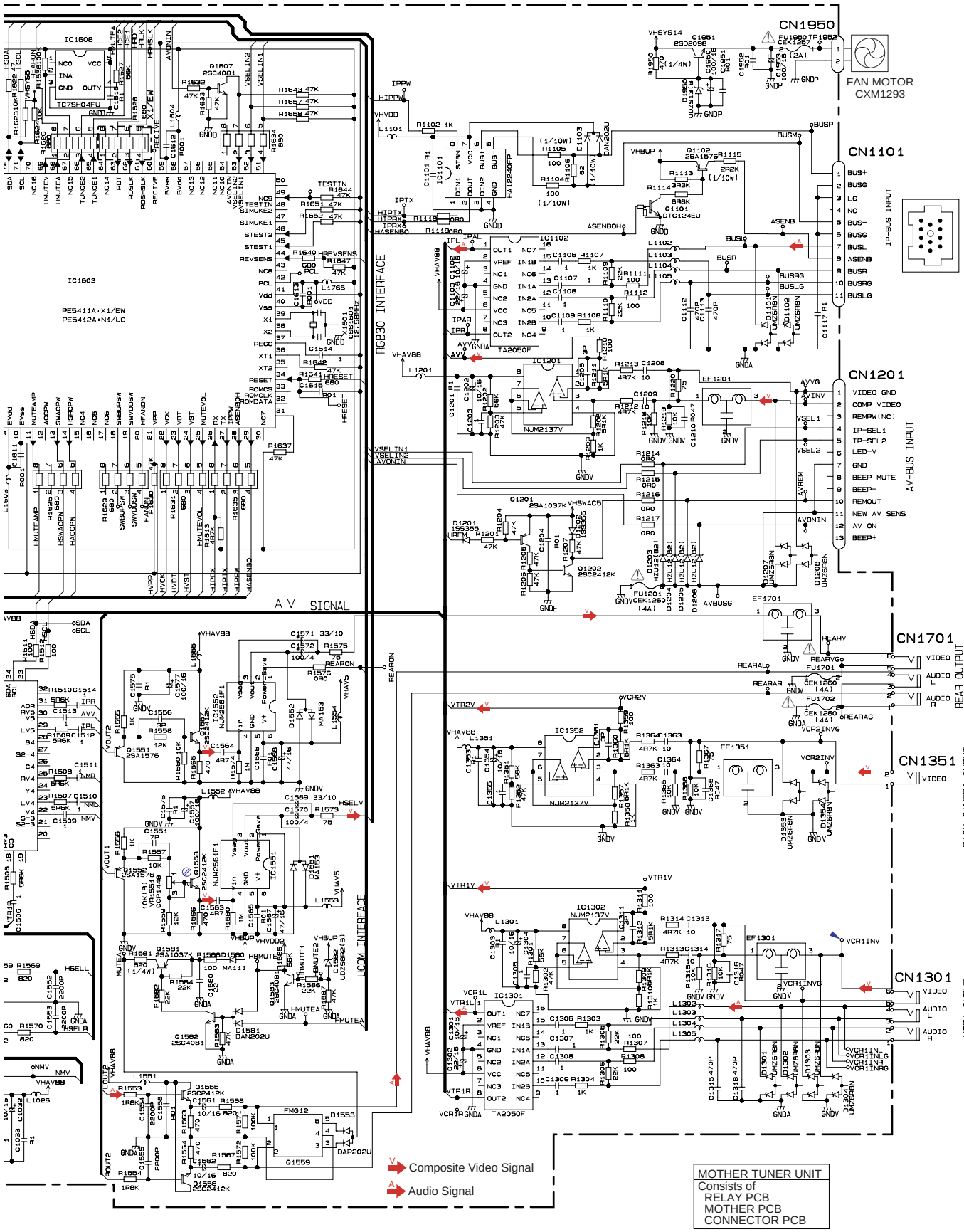

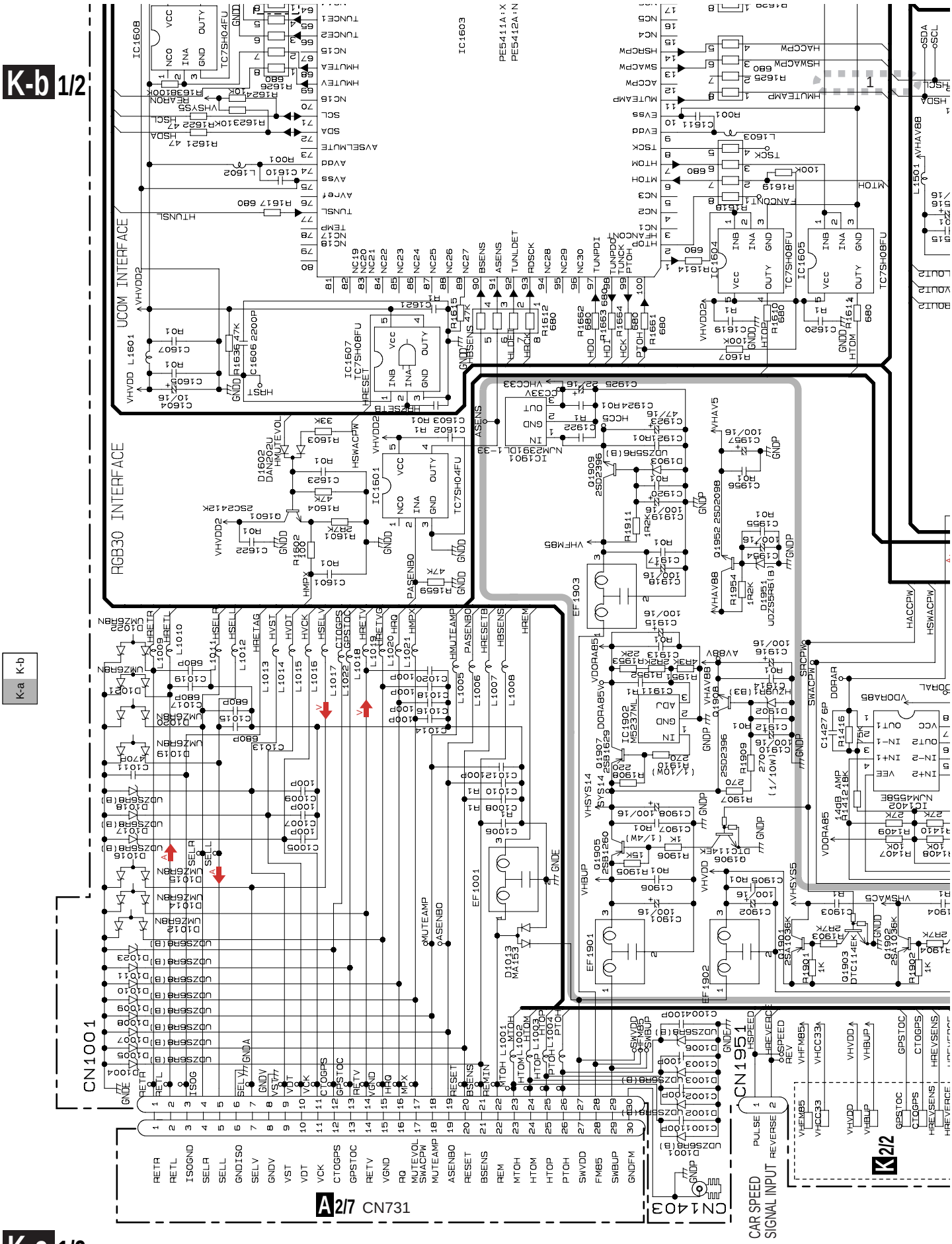
K-b 1/2
K-a 1/2
K-a K-b
UCOM INTERFACE
RGB30 INTERFACE
CN1001
A 2/7 CN731
CN1403
CN1951
CAR SPEED SIGNAL INPUT
K 2/2
IC1608
IC1603
IC1604
IC1605
IC1607
IC1501
IC1901
EF1903
EF1901
EF1902
EF1001
RETR
RETL
ISOGND
SELR
SELL
GNDISO
SELV
GNDV
VST
VDT
VCK
CTOGPS
GPSTOC
RETV
VGND
RQ
MUTEVOL
SWACPW
MUTEAMP
ASENBO
RESET
BSENS
REM
MTOH
HTOM
HTOP
PTOH
SWVDD
FMB5
SWBUP
GNDFM
PULSE
REVERSE
HSPEED
HREVERC
VHFMB5
VHCC33
VHVDD
VHBUP
HREVSENS

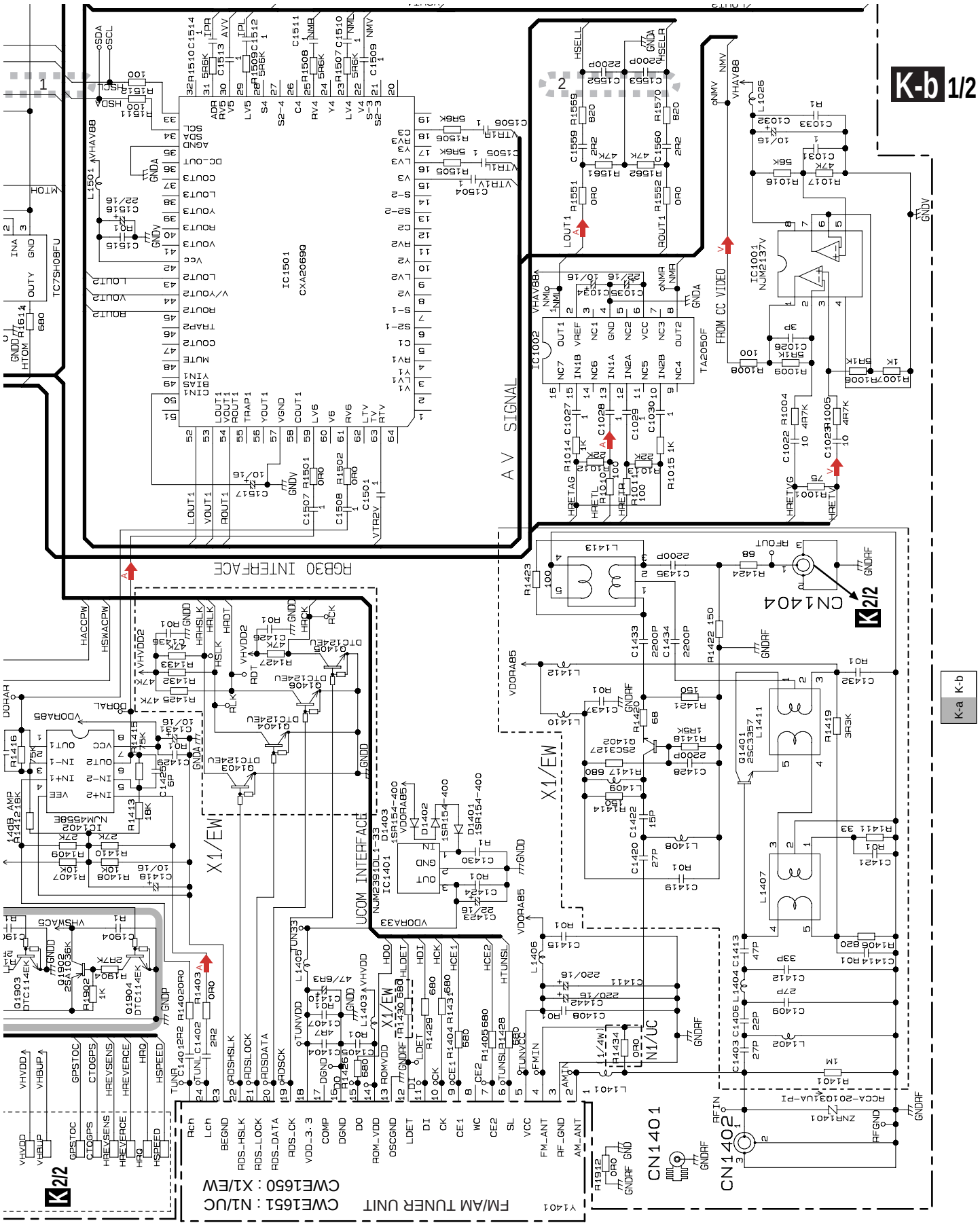
K-b 1/2
K-a 1/2
A V SIGNAL
RGB30 INTERFACE
IC1501
CXA2069Q
IC1002
TA2050F
IC1001
NJM2137V
FROM CC VIDEO
CN1404
CN1401
CN1402
X1/EW
N1/UC
UCOM INTERFACE
IC1401
NJM2391DL1-33
FM/AM TUNER UNIT
CWE1650 : X1/EW
CWE1651 : N1/UC
K-a K-b

K 1/2 MOTHER PCB (H/A SYSTEM)

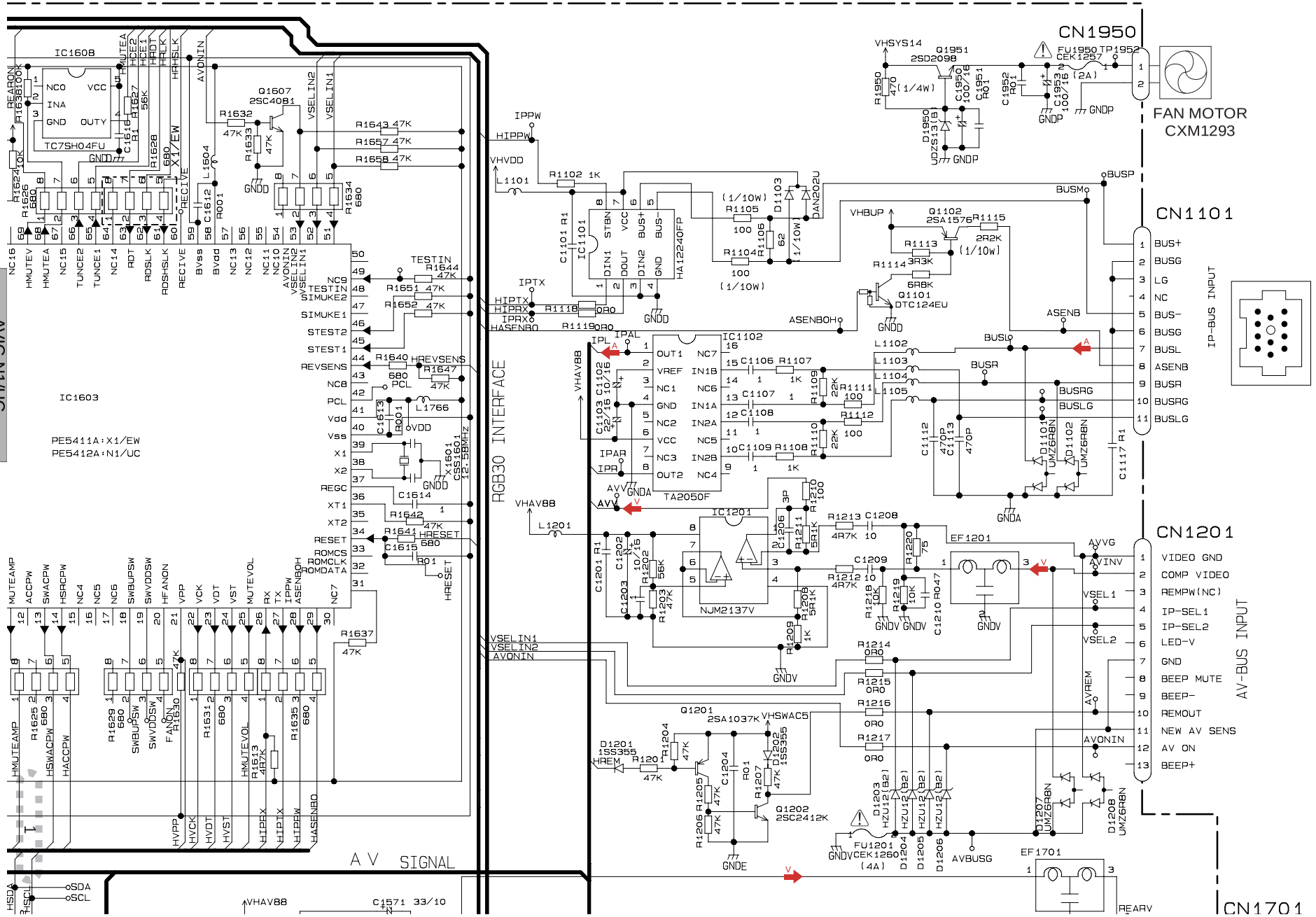

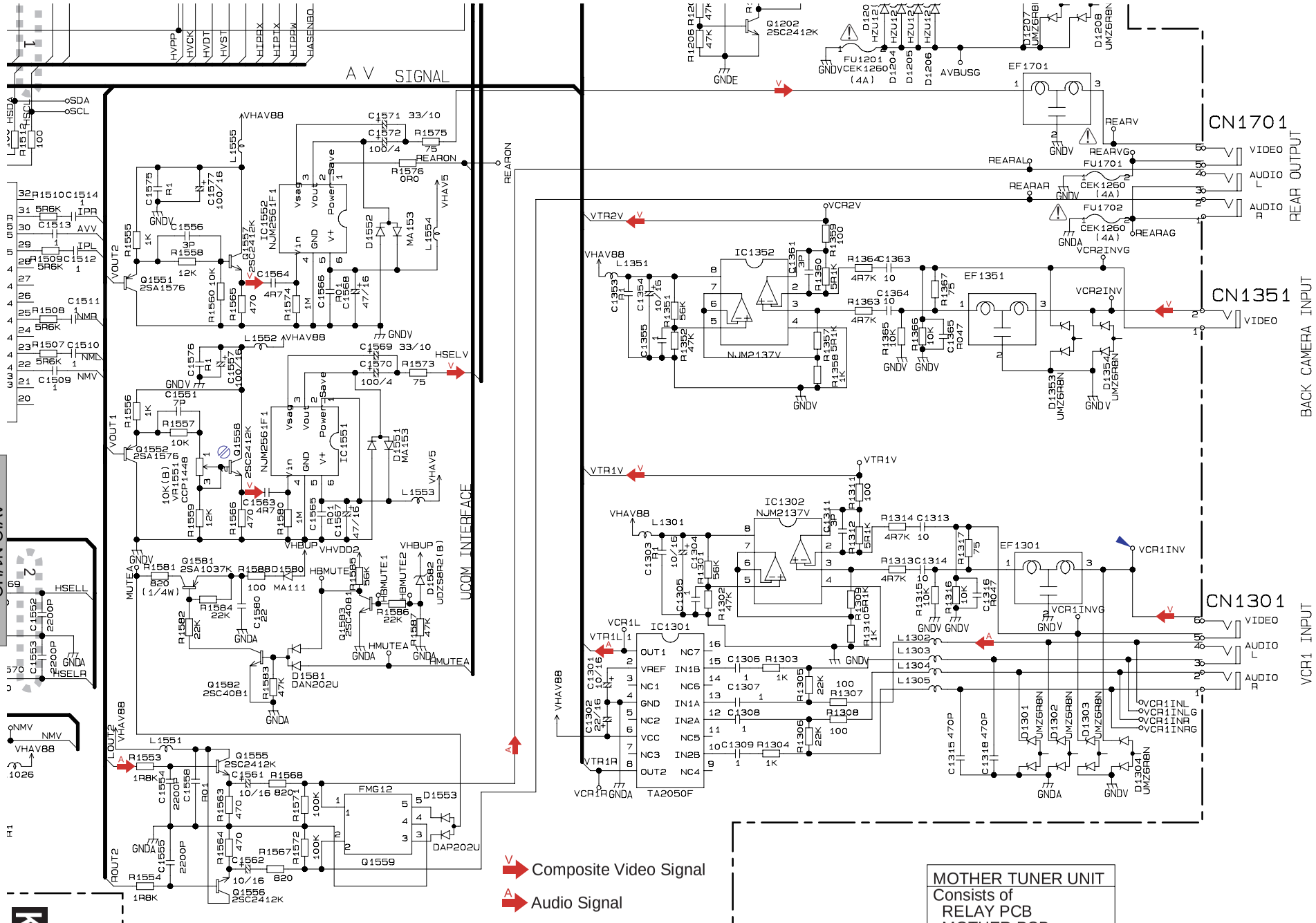
A V SIGNAL
UCOM INTERFACE
REAR OUTPUT
BACK CAMERA INPUT
VCR1 INPUT
CN1701
CN1351
CN1301
VIDEO
AUDIO L
AUDIO R
IC1552 NJM2561F1
IC1351 NJM2137V
IC1302 NJM2137V
IC1301 TA2050F
Q1559 FMG12
Q1556 2SC2412K
Q1555 2SC2412K
Q1551 2SA1576
Q1552 2SA1576
Q1558 2SC2412K
Q1581 2SA1037K
Q1582 2SC4081
Q1583 2SC4081
Q1202 2SC2412K
FU1201 CEK1260 (4A)
FU1701 CEK1260 (4A)
FU1702 CEK1260 (4A)
EF1701
EF1351
EF1301
D1552 MA153
D1551 MA153
D1581 DAN202U
D1553 DAP202U
D1582 UDZ5.6R2(B)
D1580 MA111
D1201 HZU12
D1204 HZU12
D1205 HZU12
D1206 HZU12
D1207 UMZ6.8B
D1208 UMZ6.8BN
D1353 UMZ6.8BN
D1354 UMZ6.8BN
D1301 UMZ6.8BN
D1302 UMZ6.8BN
D1303 UMZ6.8BN
D1304 UMZ6.8BN
VHAV88
VHAV5
VHVDD2
VHBUP
GNDV
GNDA
GNDE
AVBUSG
HSELV
HSELL
HSELR
REARON
REARV
REARVG
REARAL
REARAR
REARAG
VCR2V
VCR2INV
VCR2INVG
VTR2V
VTR1V
VCR1INV
VCR1INVG
VCR1INL
VCR1INLG
VCR1INR
VCR1INRG
VCR1L
VCR1R
VTR1L
VTR1R
VOUT1
VOUT2
LOUT2
ROUT2
MUTEA
HMUTEA
HBMUTE
HBMUTE1
HBMUTE2
SDA
SCL
NMV
Composite Video Signal
Audio Signal
MOTHER TUNER UNIT
Consists of
RELAY PCB
MOTHER PCB
CONNECTOR PCB
AVIC-N1/UC
K-a
K-b
K-b 1/2
109

3.20 MOTHER PCB (SENSOR)

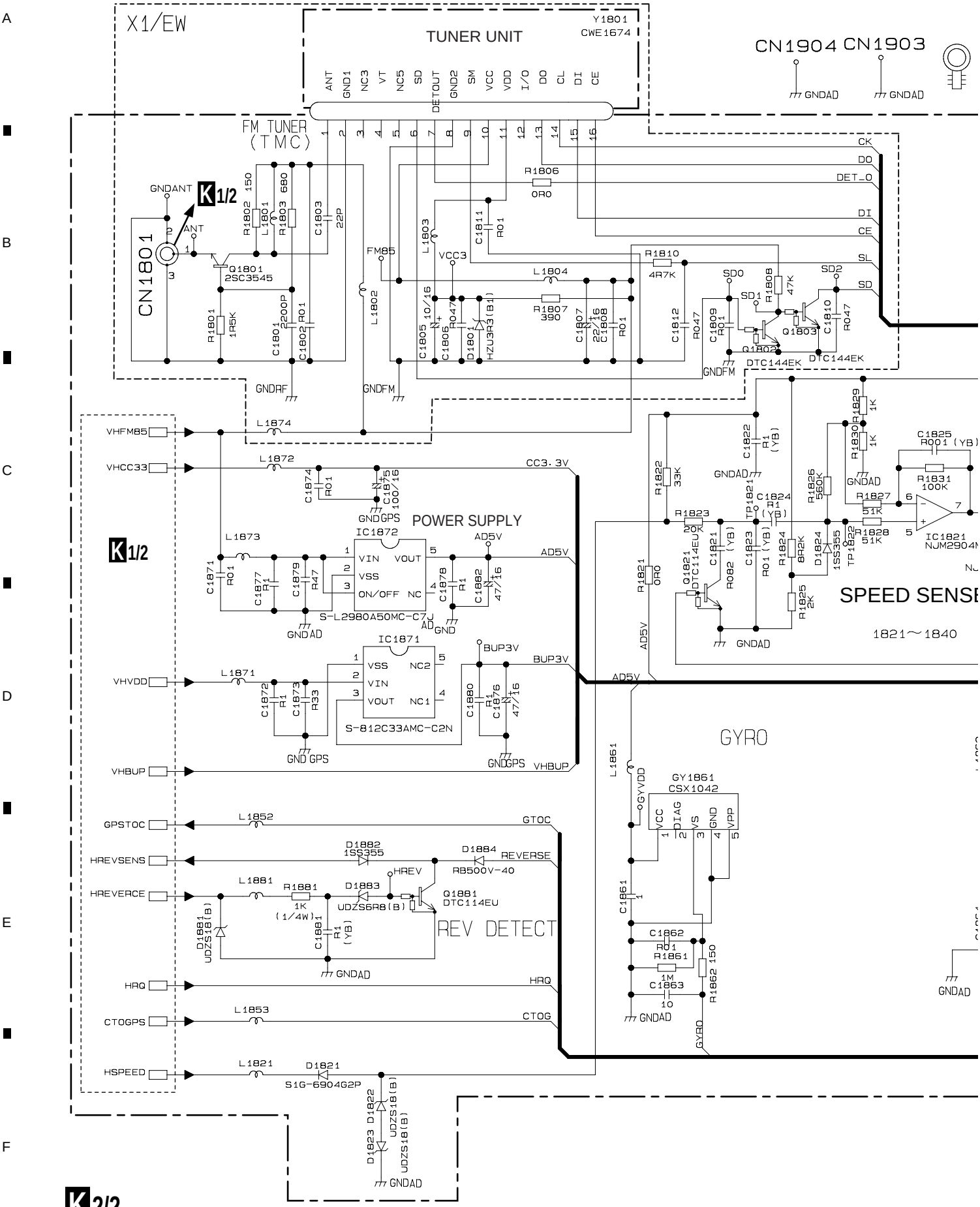

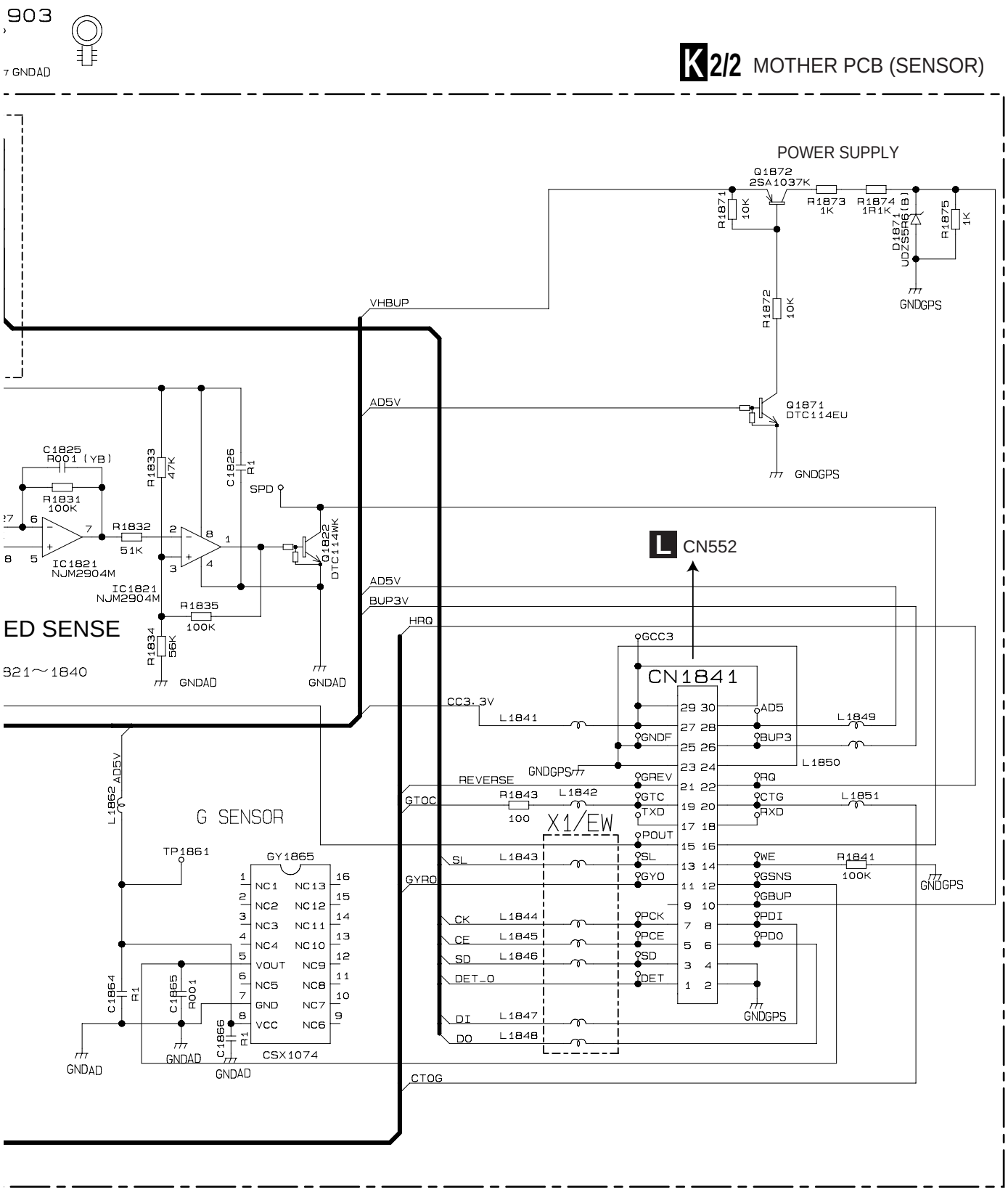

MOTHER TUNER UNIT
Consists of RELAY PCB MOTHER PCB CONNECTOR PCB

K 2/2

3.21 CONNECTOR PCB

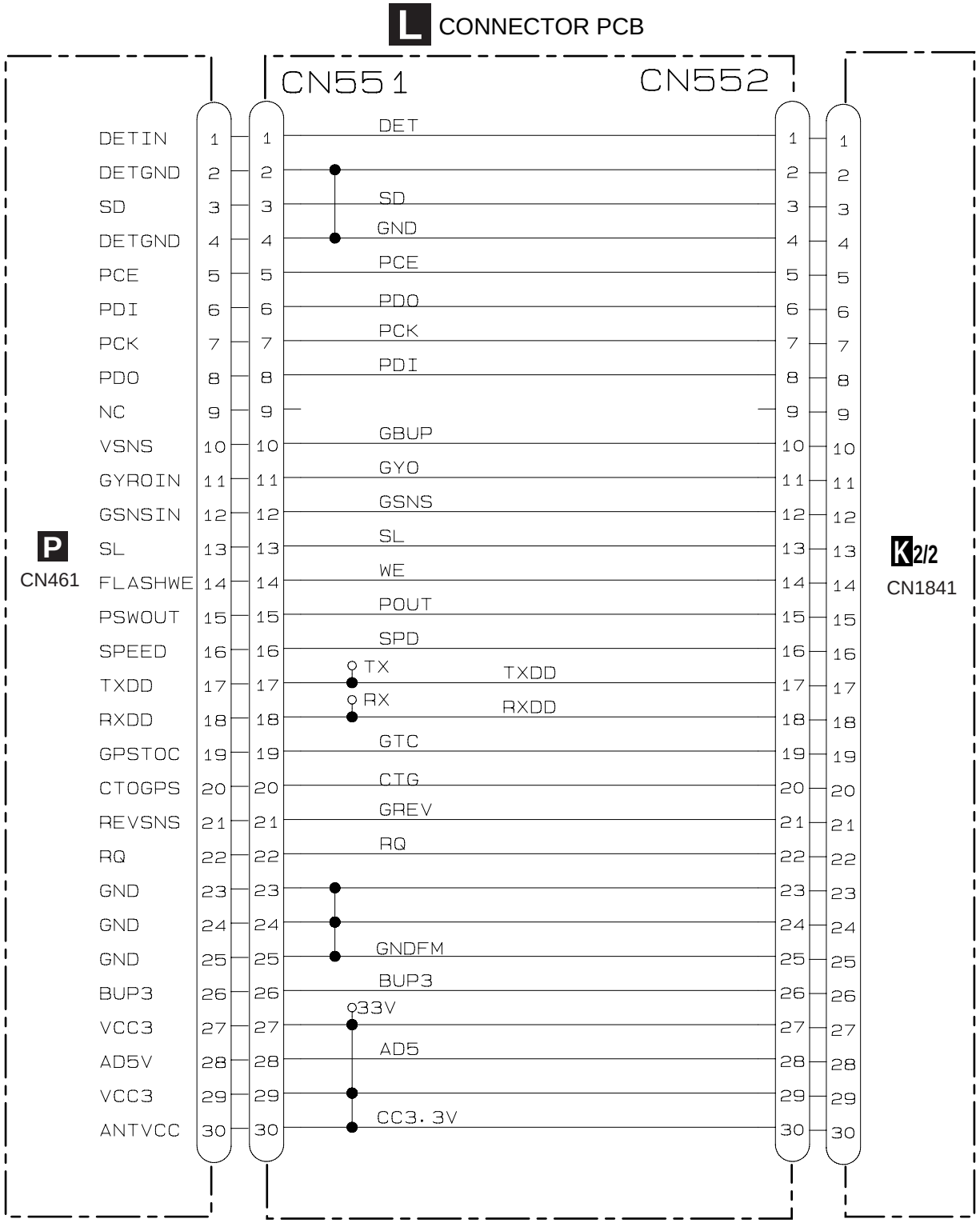

MOTHER TUNER UNIT
Consists of RELAY PCB MOTHER PCB CONNECTOR PCB

L

3.22 MAIN UNIT, SW UNIT AND VOLUME UNIT

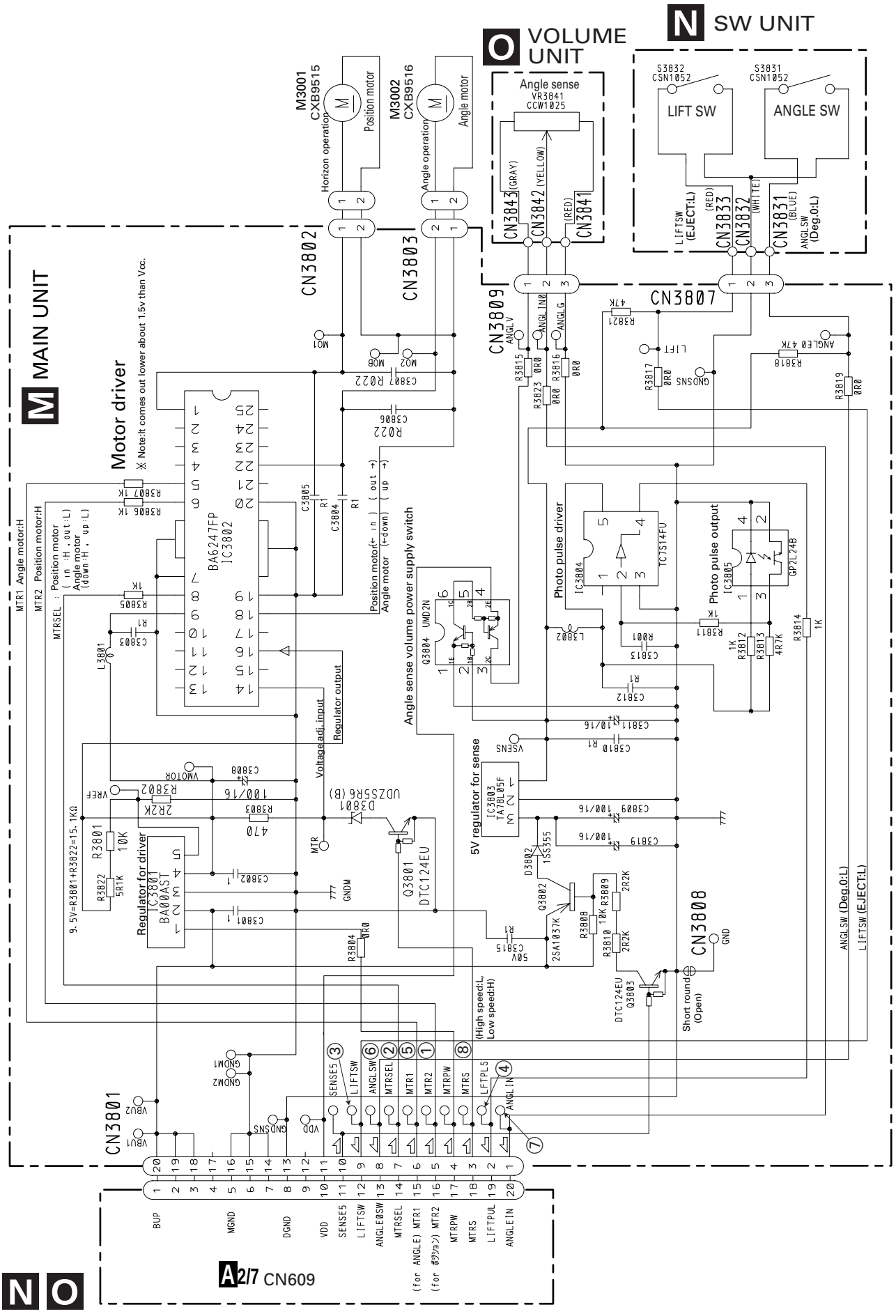

● Waveforms

The encircled number denote measuring pointes in the circuit diagram.

• CLOSE -> OPEN

① CH1:MTR2 ② CH2:MTRSEL
③ CH3:LIFTSW ④ CH4:LFTPLS

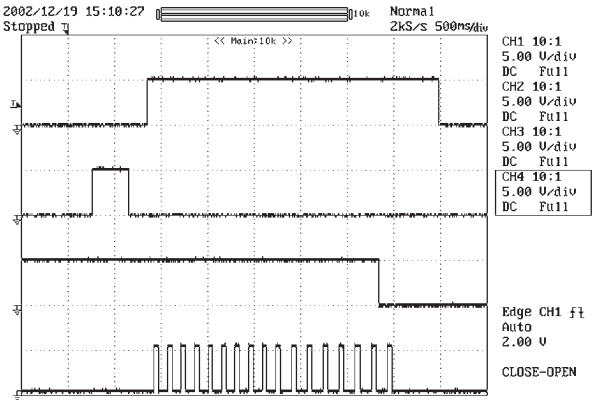

• MAX -> Deg.0 DOWN

⑤ CH1:MTR1 ② CH2:MTRSEL
⑥ CH3:ANGLSW ⑦ CH4:ANGLIN

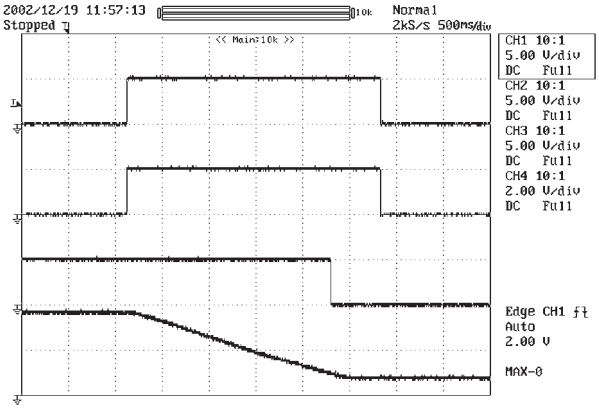

• OPEN -> CLOSE

① CH1:MTR2 ② CH2:MTRSEL
③ CH3:LIFTSW ④ CH4:LFTPLS

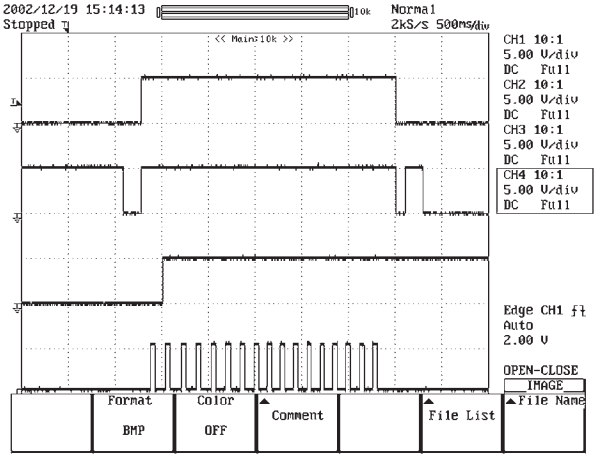

• Set back open -> Set

① CH1:MTR2 ⑧ CH2:MTRS
③ CH3:LIFTSW ④ CH4:LFTPLS

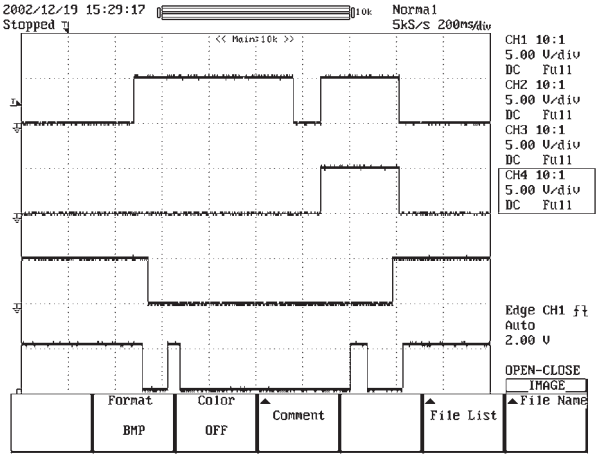

• 0->MAX

⑤ CH1:MTR1 ② CH2:MTRSEL
⑥ CH3:ANGLSW ⑦ CH4:ANGLIN

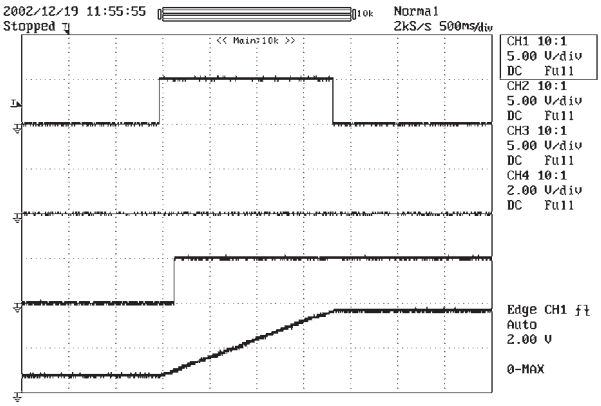

3.23 GPS UNIT(GUIDE PAGE)

P-a

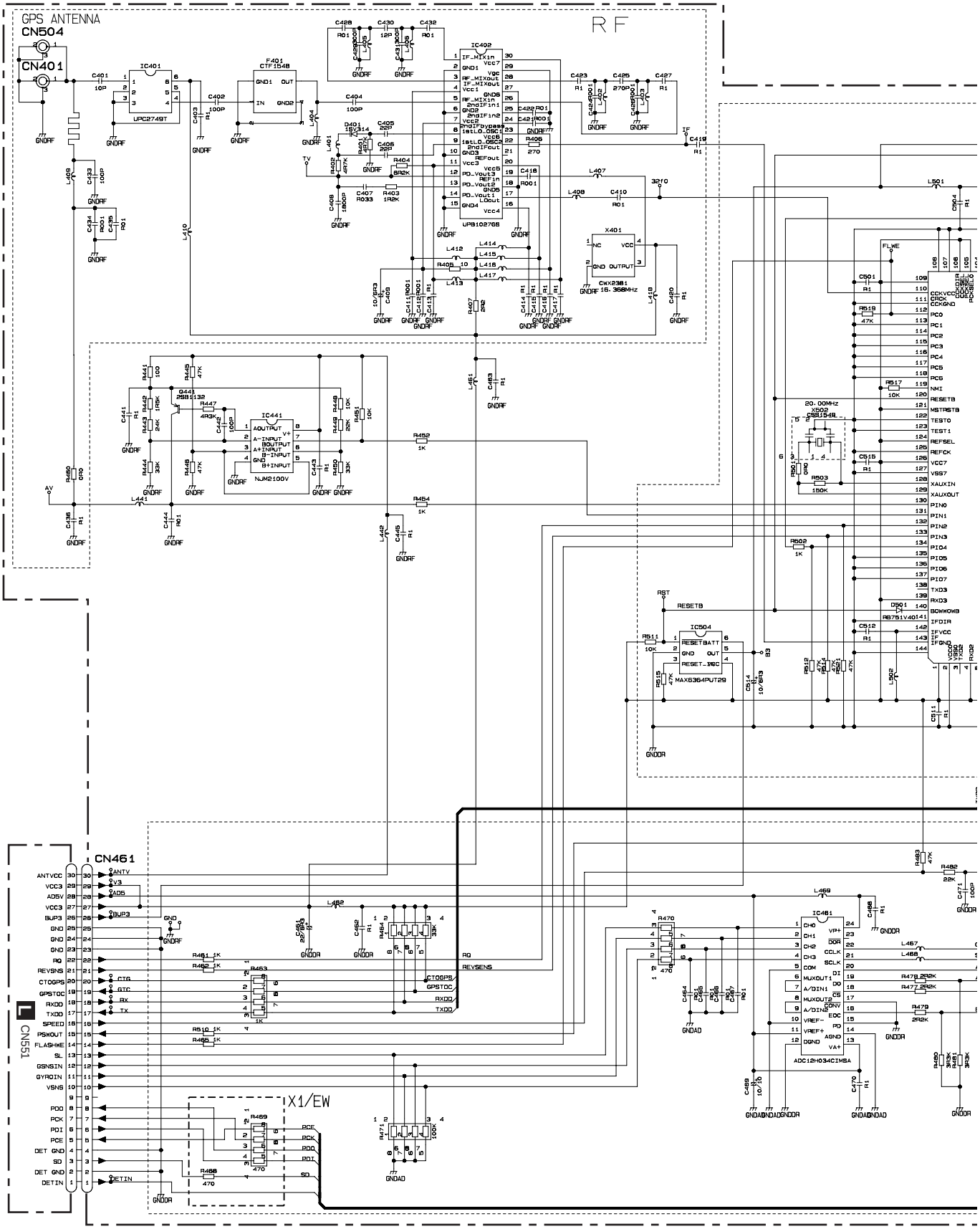

P

P-b

P GPS UNIT

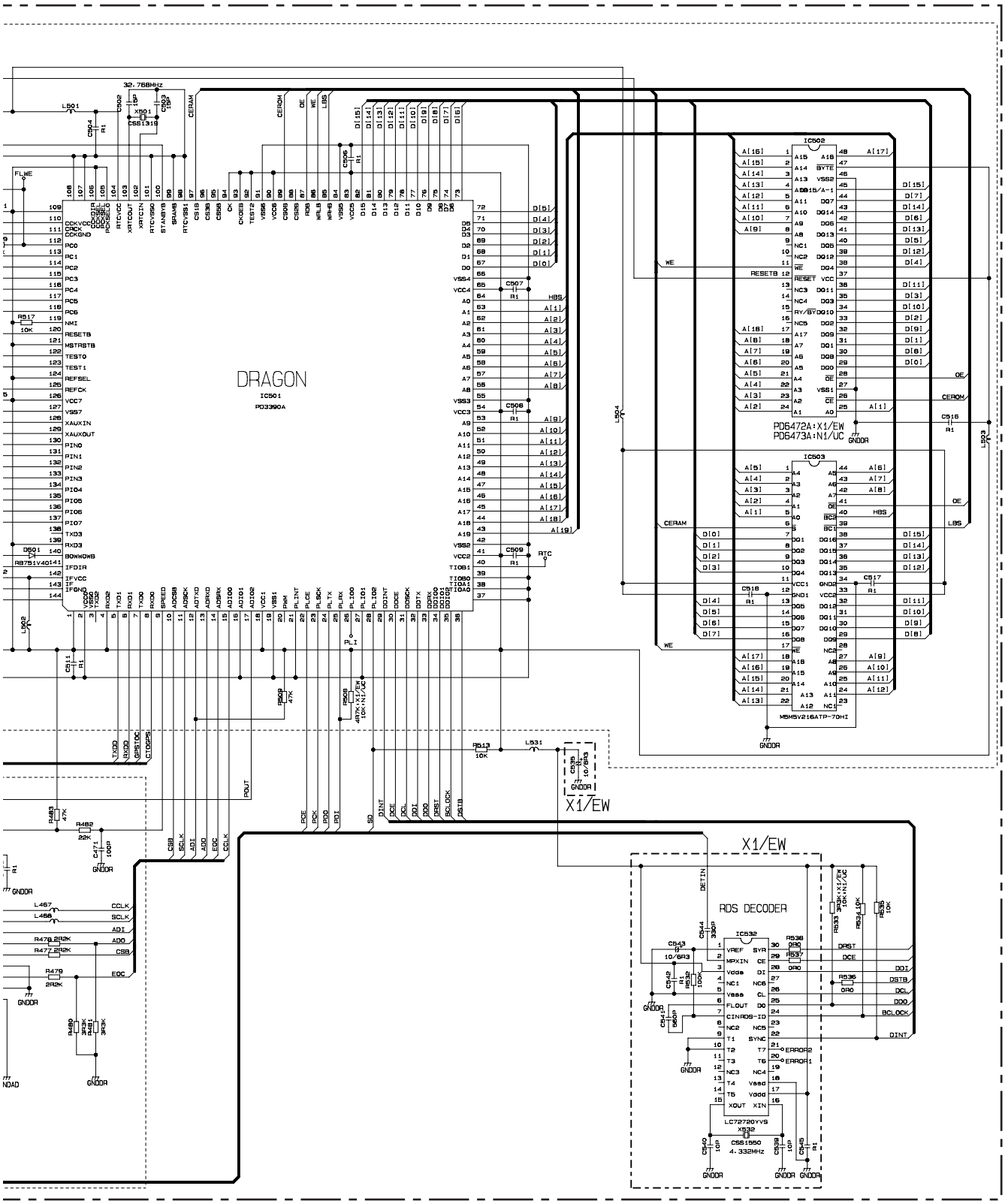
DRAGON
IC501
PD3390A
IC502
PD6472A:X1/EW
PD6473A:N1/UC
IC503
M5M5V216ATP-70HI
X1/EW
RDS DECODER
IC532
LC72720YVS
X532
CSS1550
4.332MHz
32.768MHz
X501
CSS1319
GNDDA
WE
OE
CERAM
CEROM
LBS
HBS
RTC
FLWE
TXDD
RXDD
GPSTOC
CTOPPS
POUT
PCE
PCK
PDO
PDI
SD
DINT
DCE
DCL
DDI
DDO
DRST
BCLOCK
DSTB
CCLK
SCLK
ADI
ADO
CSB
EOC
DETIN
DRST
DCE
DDI
DSTB
DCL
DDO
BCLOCK
DINT
ERROR2
ERROR1

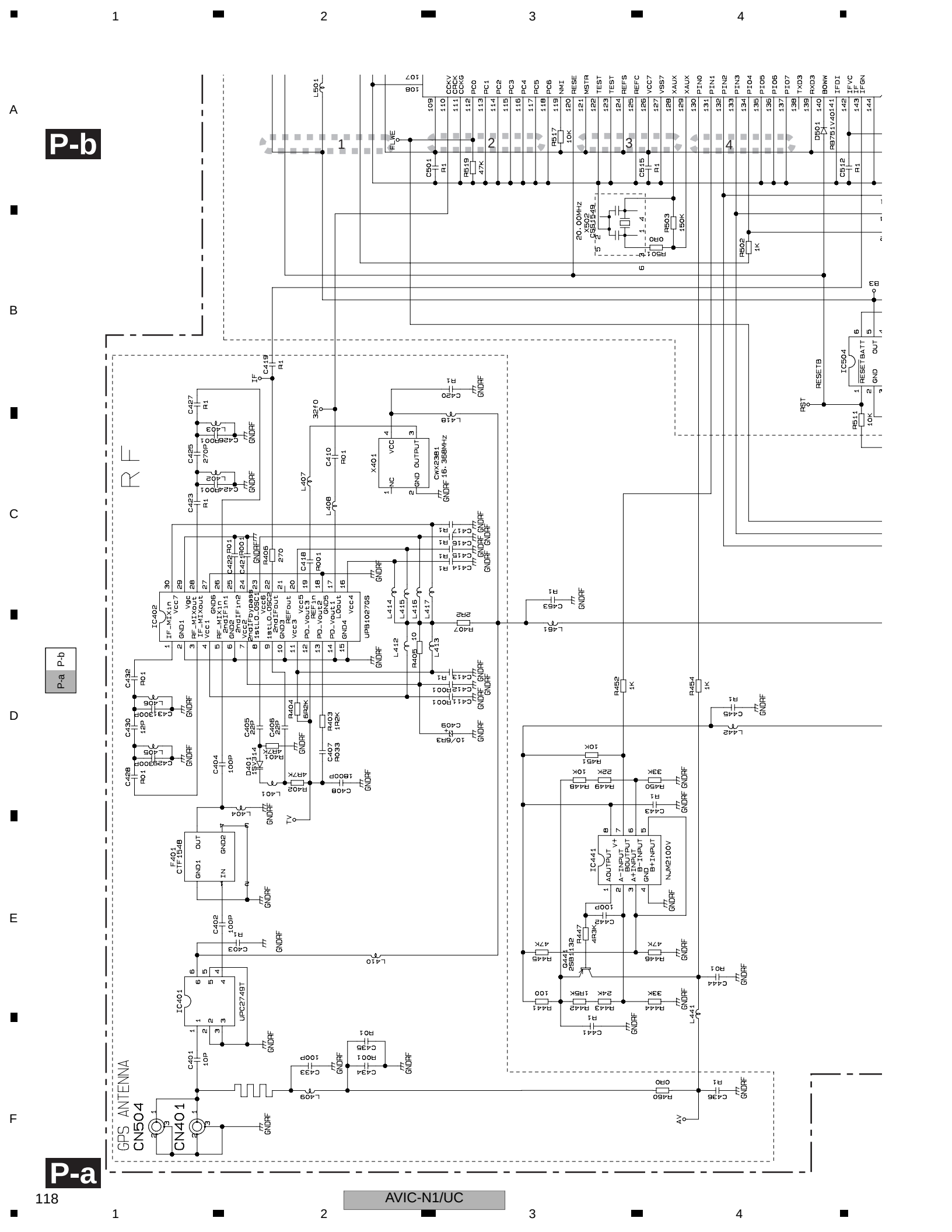
P-b
P-a
RF
GPS ANTENNA
CN504
CN401
IC401
UPC2749T
IC402
UPB1027GS
IC441
NJM2100V
IC504
X401
CWX2381
16.368MHz
X502
20.00MHz
CSS1549
D501
RB751V40141
Q441
2SB1132
F401
CTF1548
D401
1SS314
L501
L407
L408
L410
L409
L441
L461
L442
L404
L401
L402
L403
L405
L414
L415
L416
L417
L412
L413
L418
R517
10K
R519
47K
R503
150K
R501
0R0
R502
1K
R511
10K
R452
1K
R454
1K
R407
2R2
R405
10
R404
6R2K
R403
1R2K
R402
47K
R401
47K
R441
100
R442
1R5K
R443
24K
R444
33K
R445
47K
R446
47K
R447
4R3K
R448
10K
R449
22K
R450
33K
R451
10K
R460
0R0
C501
R1
C515
R1
C512
R1
C419
R1
C420
R1
C427
R1
C425
270P
C423
R1
C410
R01
C418
R001
C422
R01
C421
R001
C432
R01
C430
12P
C428
R01
C429
C431
C404
100P
C405
22P
C406
22P
C407
R033
C408
180P
C409
10/6R3
C402
100P
C403
R1
C401
10P
C433
100P
C434
R001
C435
R01
C436
R1
C441
R1
C442
100P
C443
R1
C444
R01
C445
R1
C411
R001
C412
R001
C413
R1
C414
R1
C415
R1
C416
R1
C417
R1
C463
R1
RESETB
RST
IF
32f0
TV
AV
RESET
BATT
GND
OUT

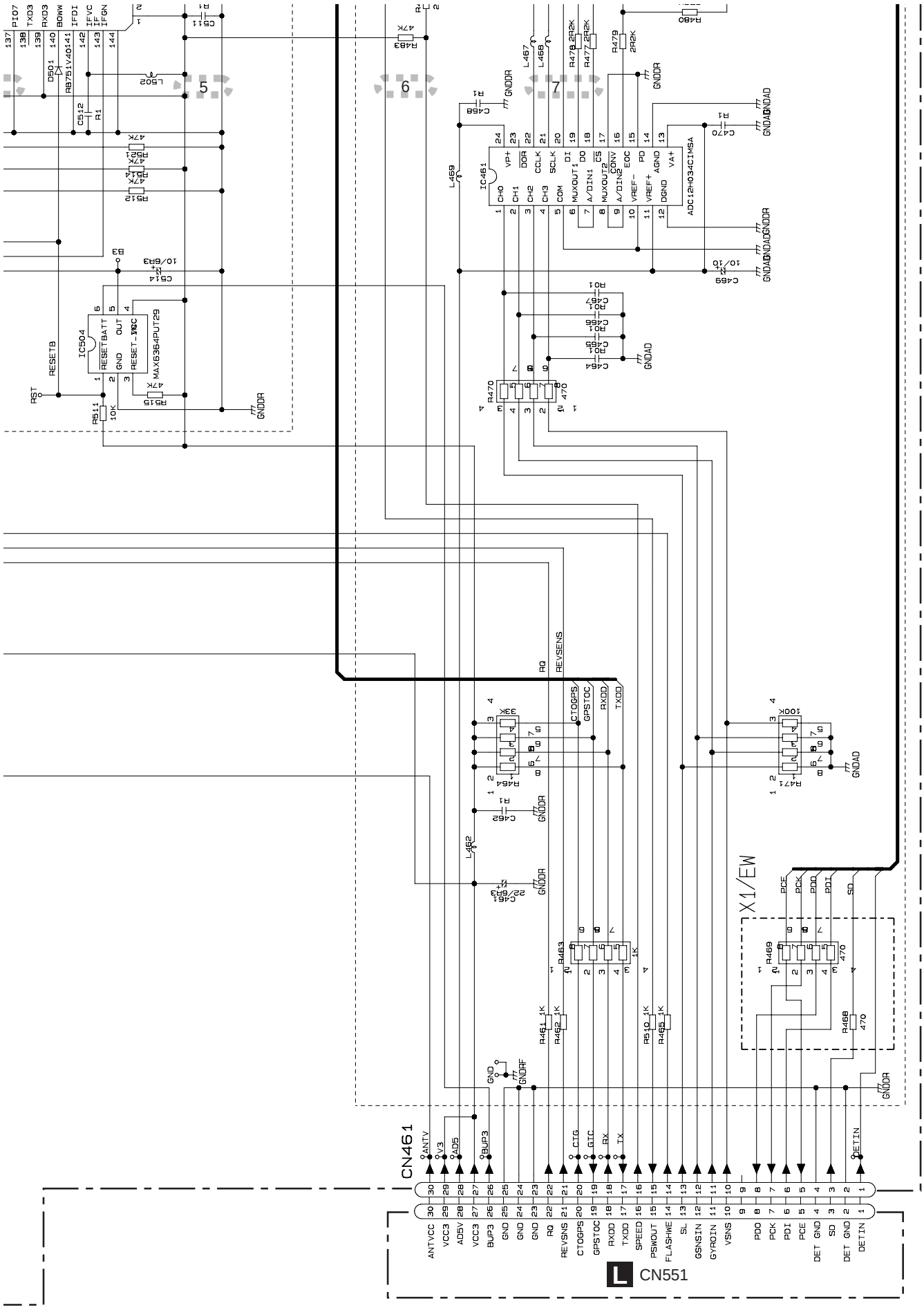
P-b
P-a
CN461
CN551
X1/EW
IC504
MAX6364PUT29
IC461
ADC12H034CIMSA
GNDDR
GNDAD
GNDRF
RESETB
RST
ANTVCC
VCC3
AD5V
BUP3
REVSENS
CTOGPS
GPSTOC
RXDD
TXDD
SPEED
PSWOUT
FLASHWE
SL
GSNSIN
GYROIN
VSNS
PDO
PCK
PDI
PCE
DET GND
SD
DETIN

P GPS UNIT

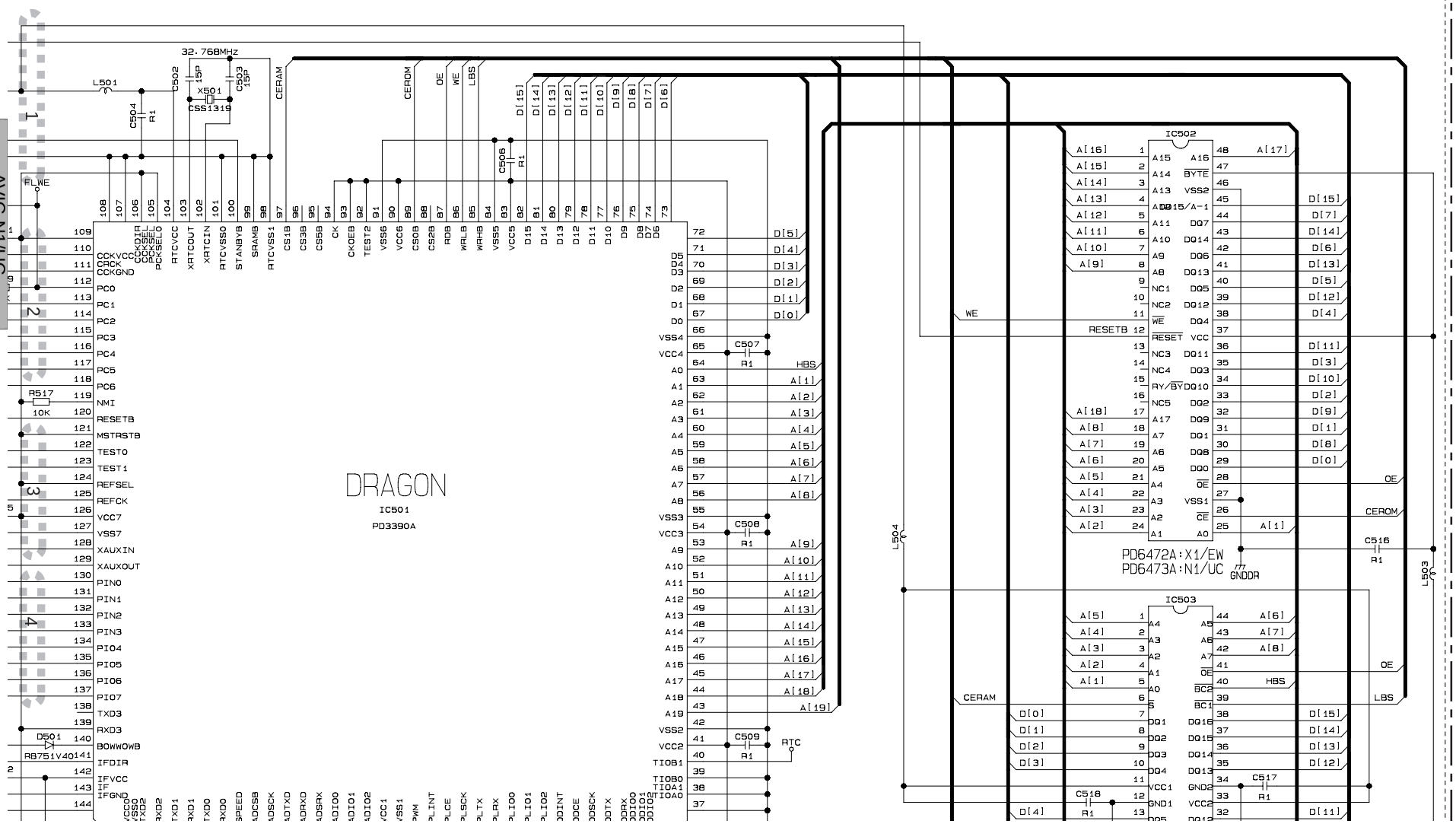
AVIC-N1/UC
DRAGON
IC501
PD3390A
IC502
PD6472A:X1/EW
PD6473A:N1/UC
IC503
32.768MHz
X501
CSS1319
L501
L503
L504
R517
10K
D501
RB751V40
C502
C503
C504
C506
C507
C508
C509
C516
C517
C518
R1
GNDDR
CERAM
CEROM
OE
WE
LBS
HBS
RTC
FL_WE
RESETB

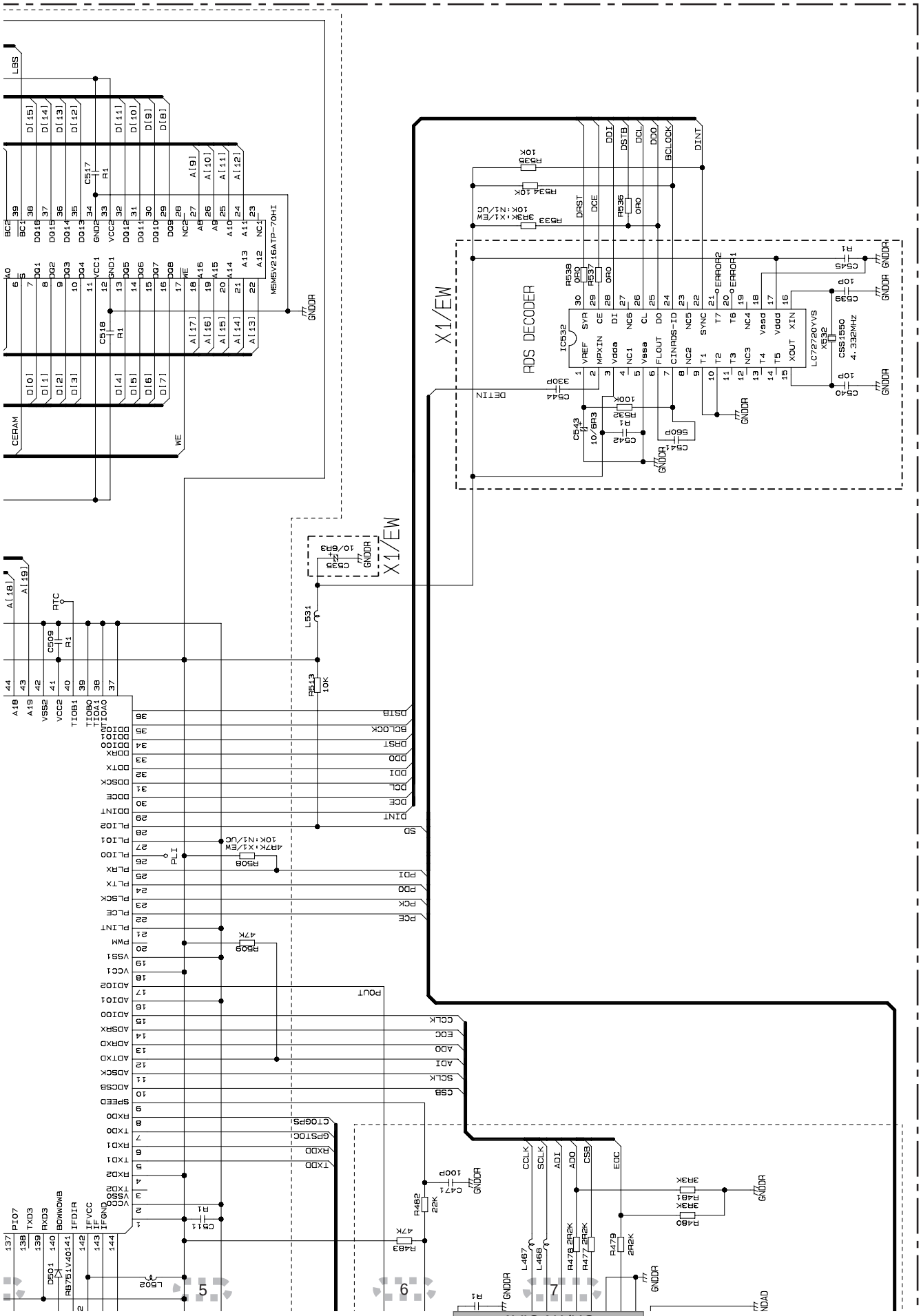
X1/EW
RDS DECODER
IC532
LC72720YVS
X532
CSS1550
4.332MHz
M5M5V216ATP-70HI
CERAM
WE
LBS
GNDDR
DETIN
DINT
DDI
DSTB
DCL
DDO
BCLOCK
DRST
DCE
ERROR2
ERROR1
RTC
PLI
PDI
PDO
PCK
PCE
SD
PWM
PLINT
PLCE
PLCK
PLTX
PLRX
PLI00
PLI01
PLI02
DDINT
DDCE
DDCK
DDTX
DDRX
DDIO0
DDIO1
DSTB
BCLOCK
DRST
DDO
DDI
DCL
DCE
DINT
A18
A19
VSS2
VCC2
TIO81
TIO80
TIO81
TIO80
PI07
TXD3
RXD3
BOWWOWB
IFDIR
IFVCC
IF
IFGND
VCC
VSS
TXD2
RXD2
TXD1
RXD1
TXD0
RXD0
SPEED
ADCSB
ADCSK
ADTXD
ADRXD
ADSRX
ADIO0
ADIO1
ADIO2
VCC1
VSS1
POUT
CCLK
EOC
ADO
ADI
SCLK
CSB
CTOGPS
GPSTOC
RXDD
TXDD
AVIC-N1/UC
P-a
P-b
121

4. PCB CONNECTION DIAGRAM
4.1 CC UNIT

NOTE FOR PCB DIAGRAMS

1. The parts mounted on this PCB include all necessary parts for several destination.
   For further information for respective destinations, be sure to check with the schematic diagram.
2. Viewpoint of PCB diagrams

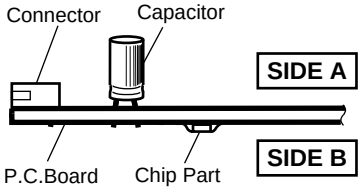

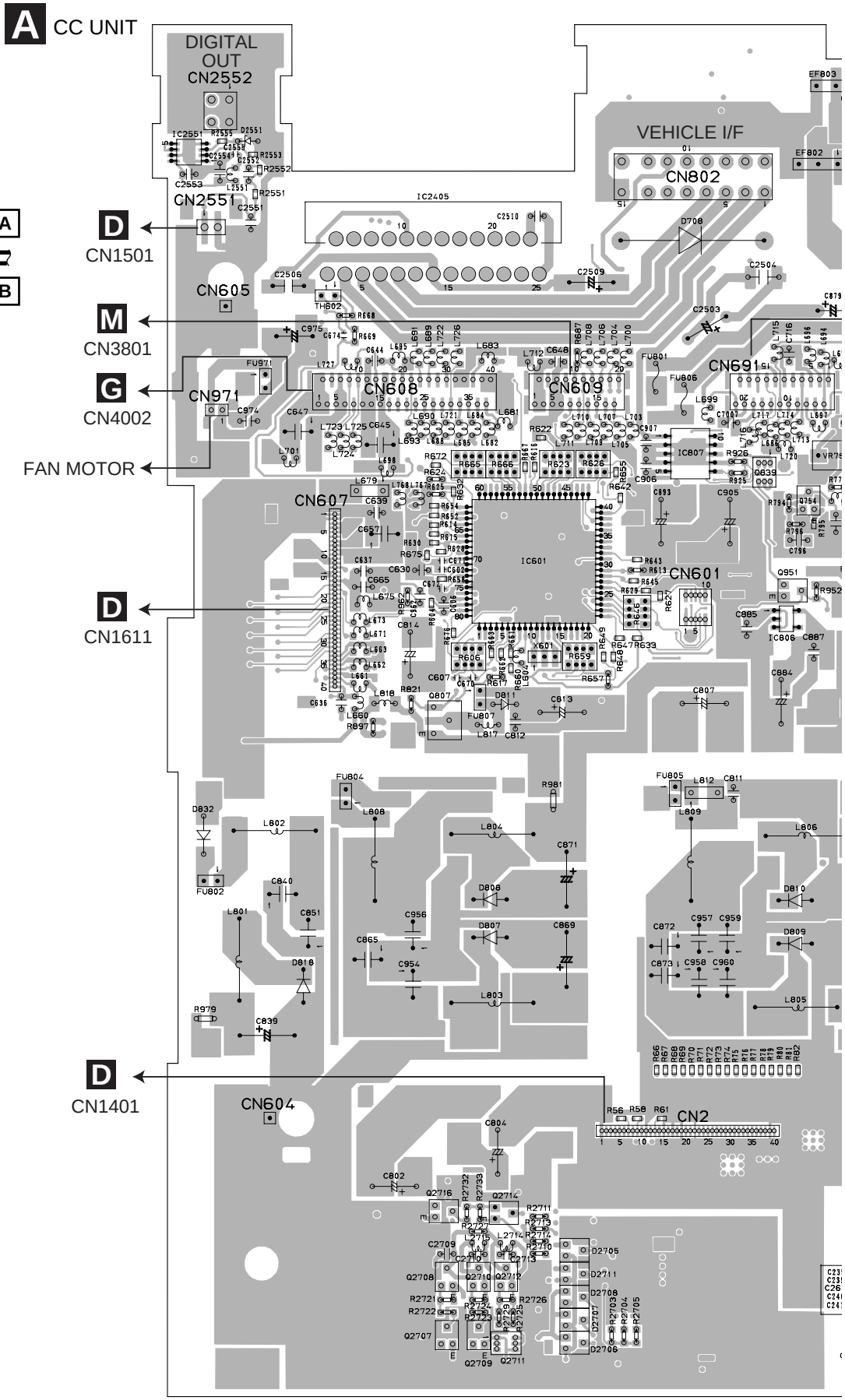

SIDE A

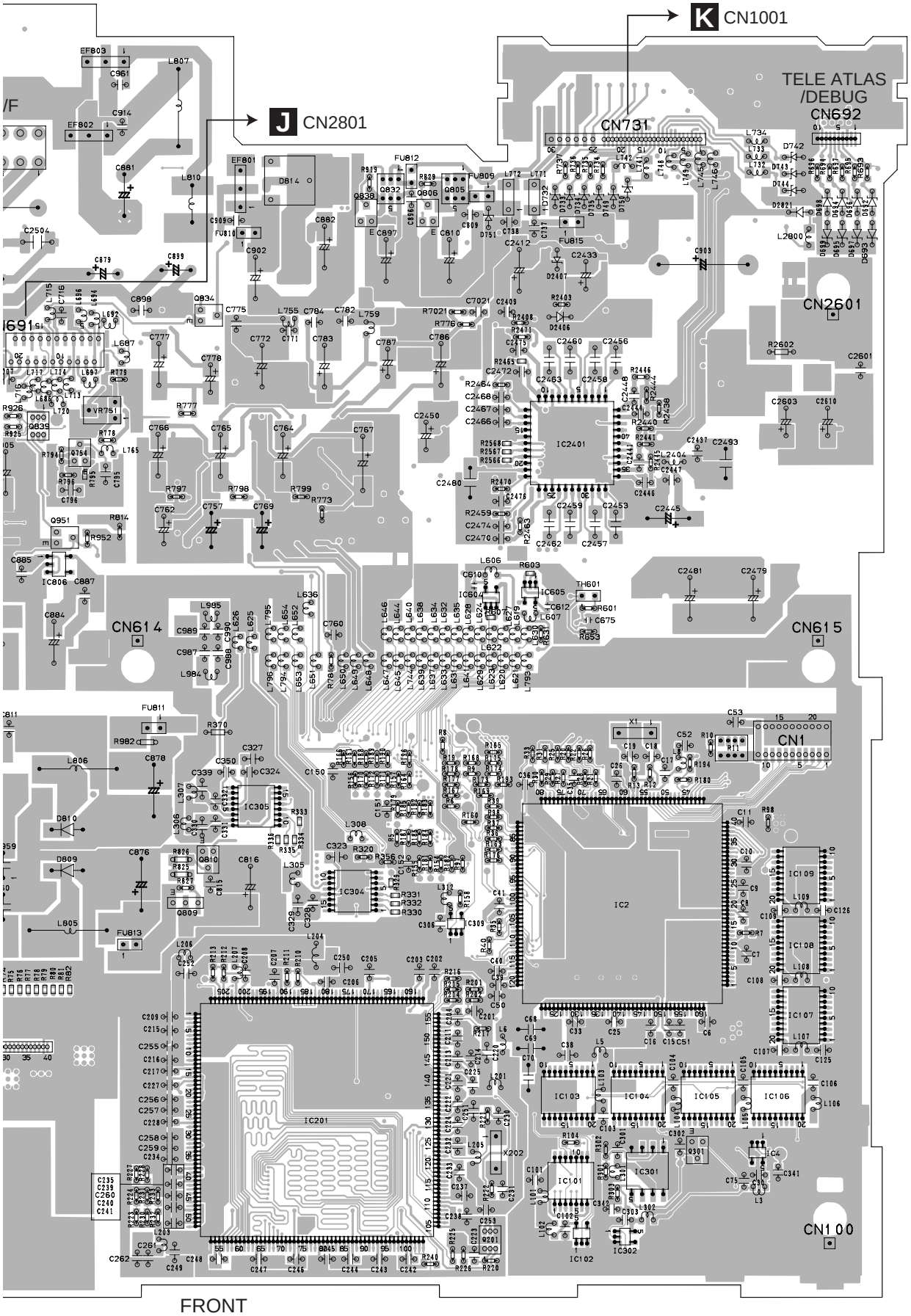

IC,Q

IC2551

IC2405

Q832 Q805 Q806

Q838

Q834

IC807 VR751

Q754

IC2401 Q839

IC601

Q951

IC806

IC605 IC604

Q807

IC305

Q810

IC109

IC304 IC309 Q809

IC2

IC108

IC107

IC103 IC104 IC105

Q2716 Q2714 IC106

IC201

IC4

Q2710 Q301 IC301

IC101 Q2708 Q2712

Q2707 Q201 Q2711

IC302 IC102 Q2709

A

A CC UNIT

IC,Q

Q822 Q704
Q691
Q692
Q821
IC691
Q823
Q601 Q833 Q840
Q835
Q824 Q2401 Q2402 Q825
Q2403 IC2407
Q2428
Q2610 Q971 Q2427
Q2410
IC2408 Q837 IC752
Q973 Q2611 IC754
IC755 Q2419 Q972 IC756 IC753
Q2418 IC2552 IC2553 Q2414 Q828
Q2416 Q2421 IC2402 Q2422 Q731
IC2404 Q2409 IC2601 Q752 IC607
Q2715 IC613 IC611 Q2417 Q621
Q751
IC808 IC603 Q2415 Q829 Q2408
Q2713 Q2605 IC757 IC751
IC731 IC602 Q2608 Q2606 Q2603
IC608 Q2607
Q2717 IC612 Q843 Q2604
IC2702 IC758
Q808 Q2420
Q602 Q830 IC810 IC2403 IC801
Q815

Q816
IC112
IC805
IC114
IC803 IC804
IC113
IC5
Q811
Q819 Q820
Q814
IC110
Q801 Q804
Q803
IC3 IC1
IC2701
Q802 IC111 Q2706
Q2701
Q2705
Q2703
Q2702
Q2704

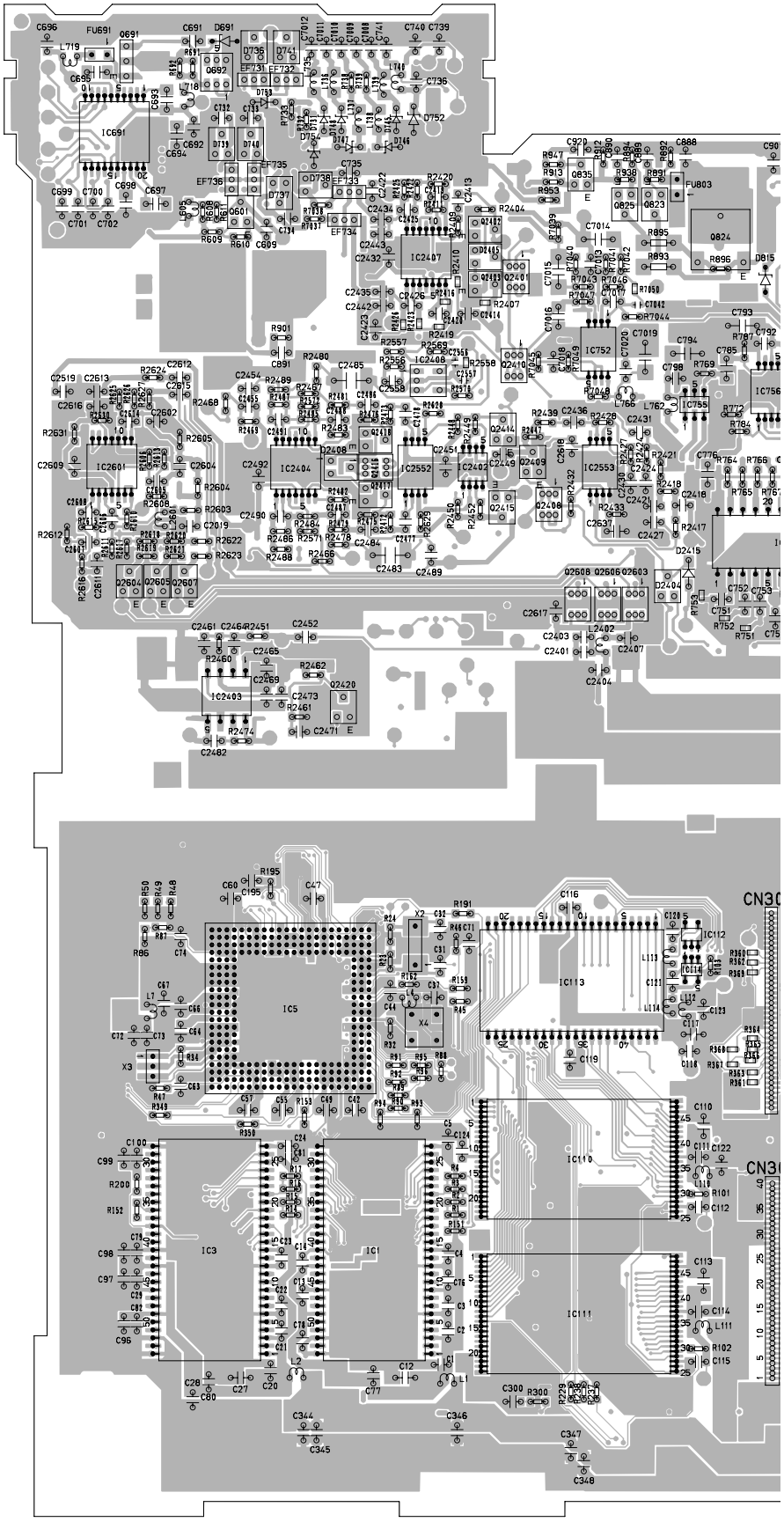

SIDE B

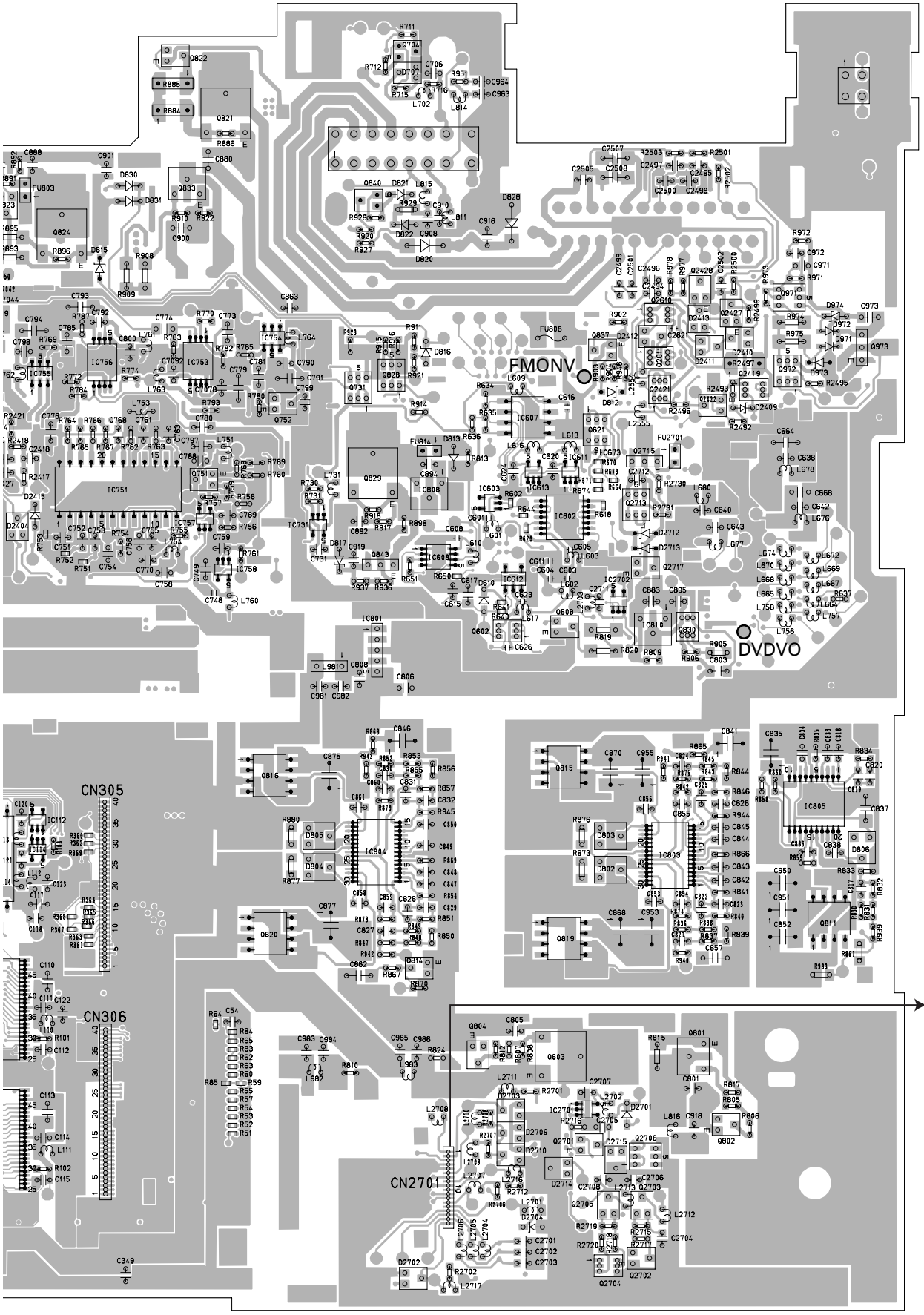

4.2 KEYBOARD PCB

B KEYBOARD PCB

SIDE A

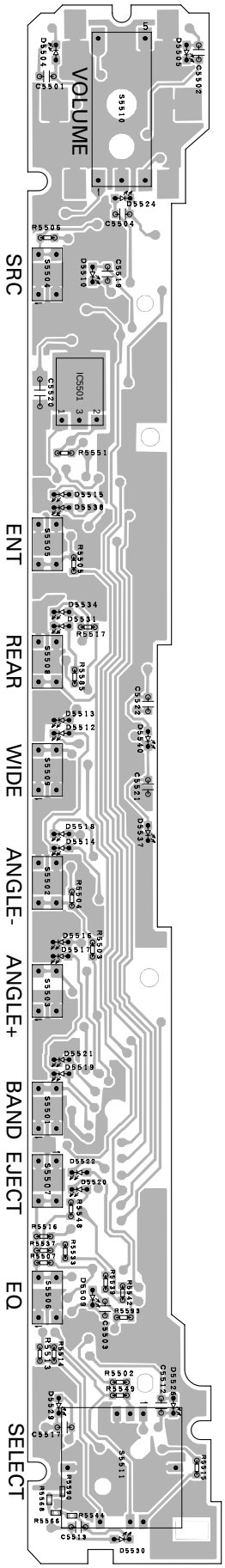

B KEYBOARD PCB

SIDE B

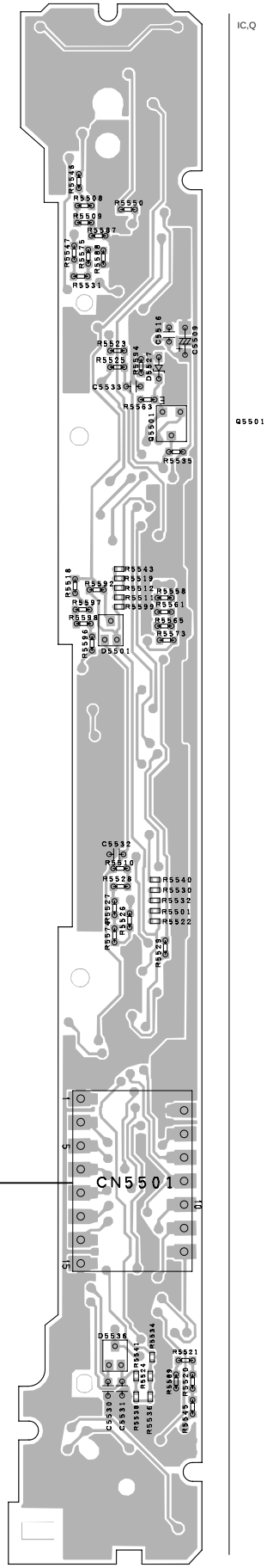

C
CN5902

B

4.3 PANEL PCB

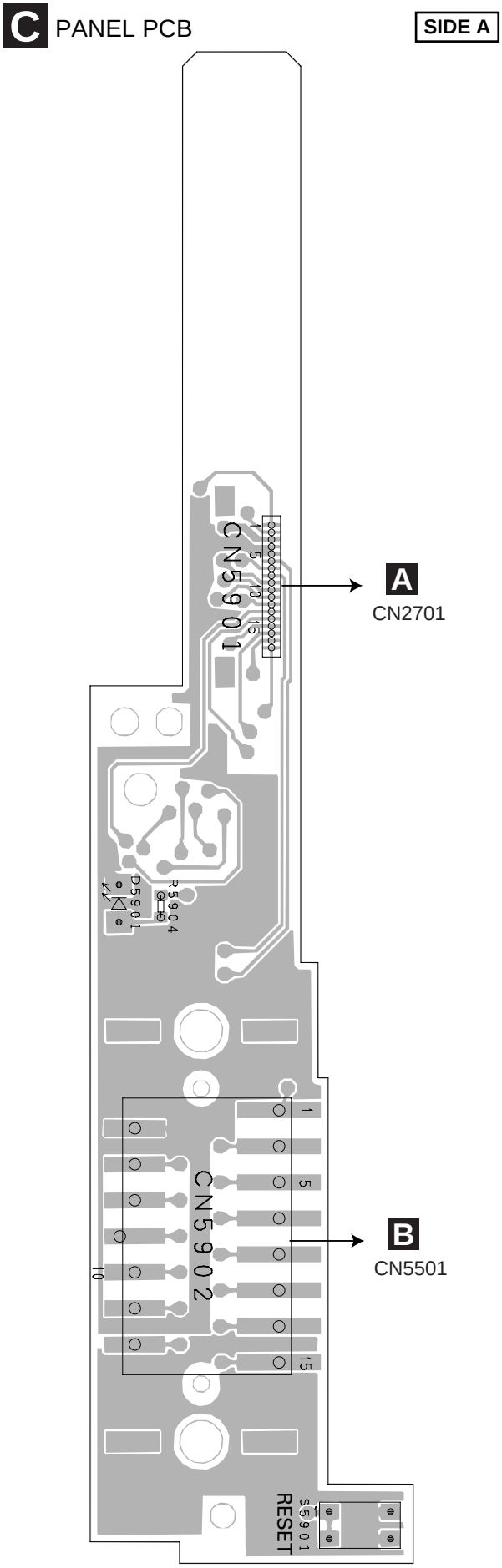
C PANEL PCB
SIDE A
CN5901
A
CN2701
D5901
R5904
CN5902
B
CN5501
S5901
RESET

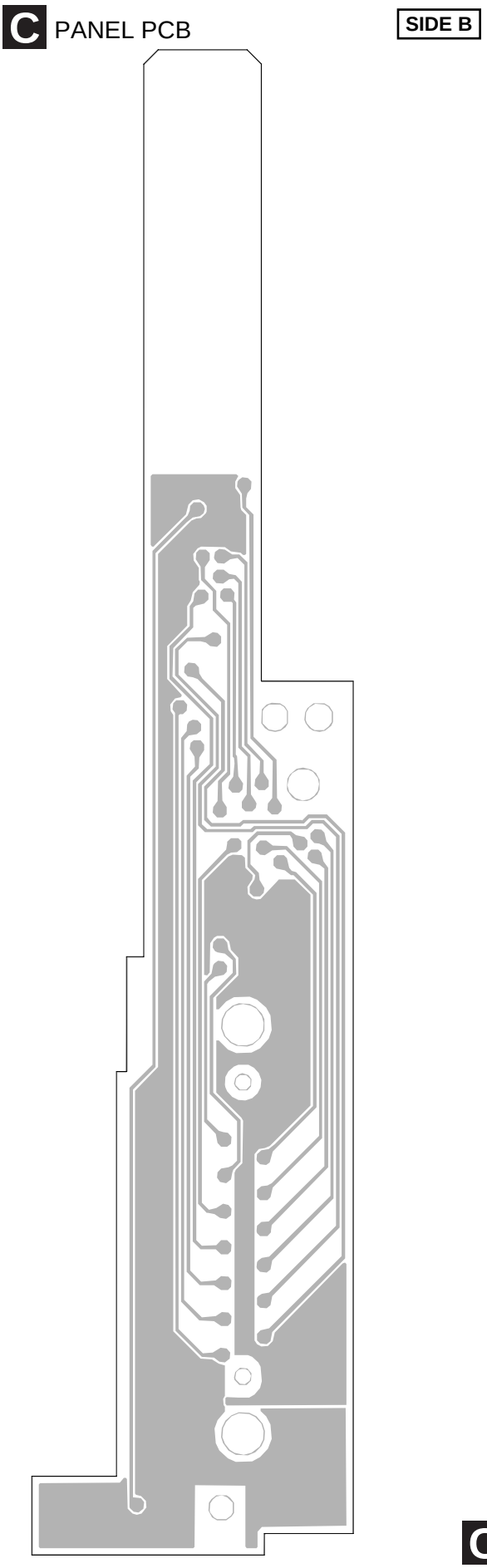
C PANEL PCB
SIDE B

4.4 DVD CORE UNIT(MS3)

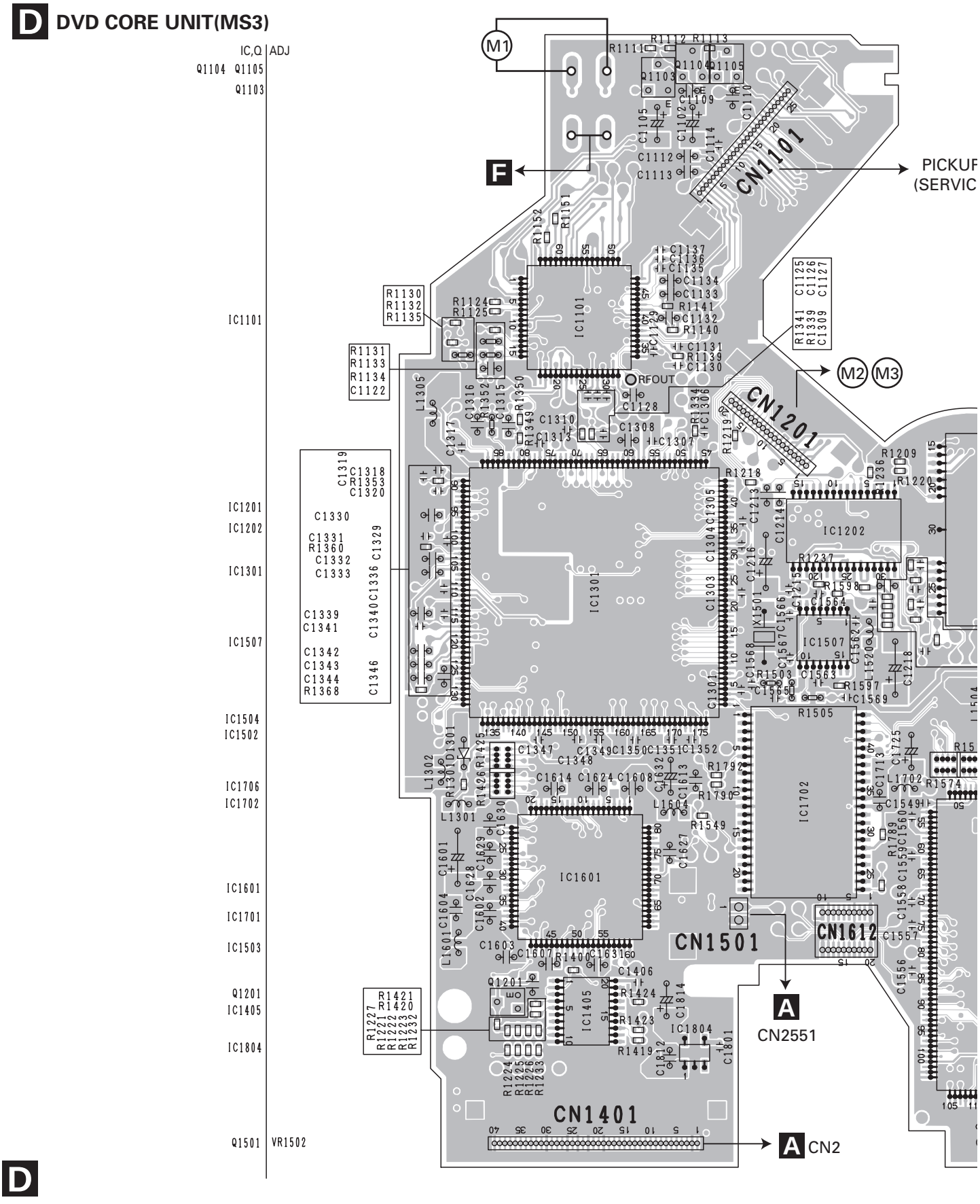

SIDE A

→ PICKUP UNIT
(SERVICE)(DP5)

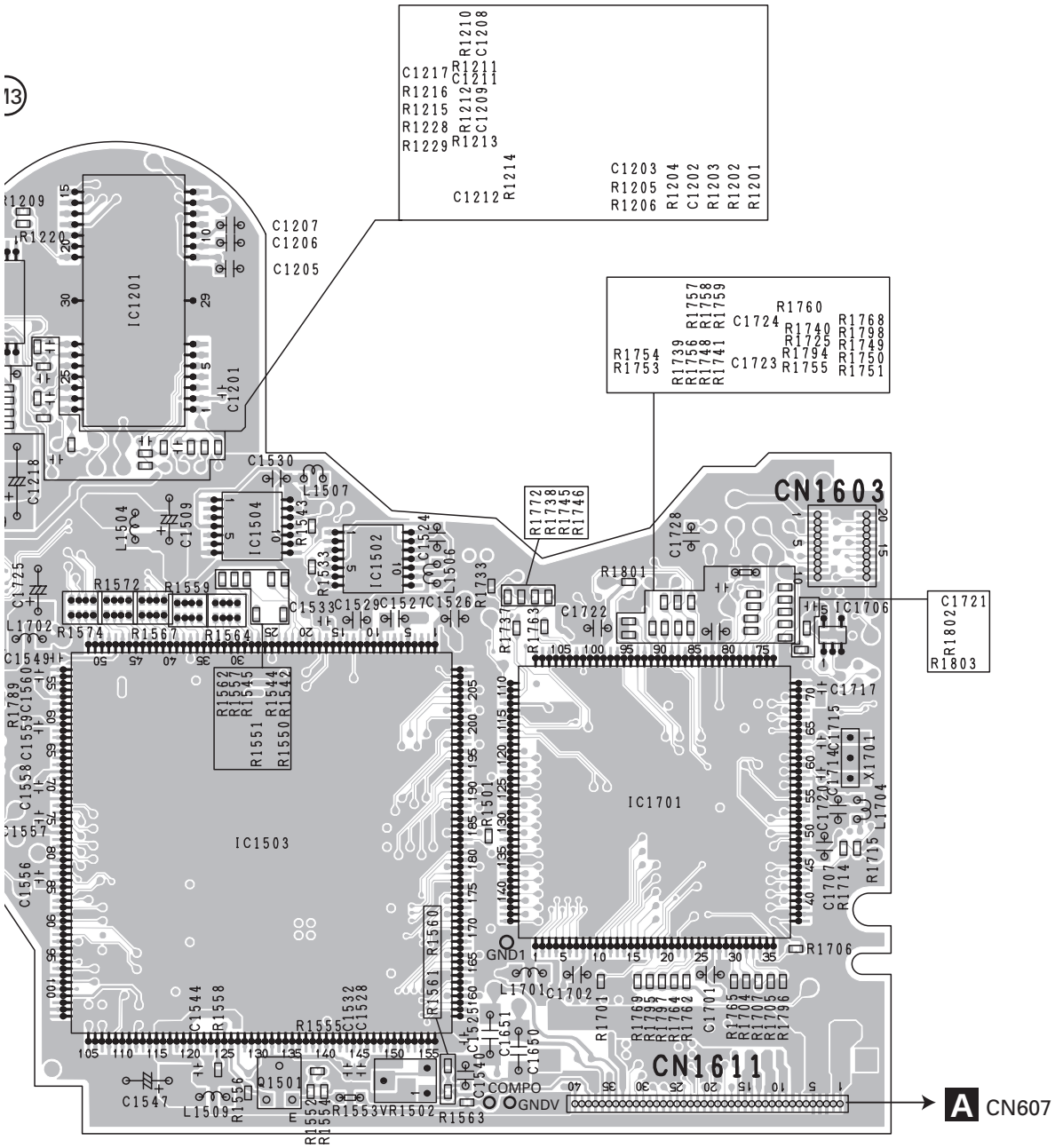

D

D DVD CORE UNIT(MS3)

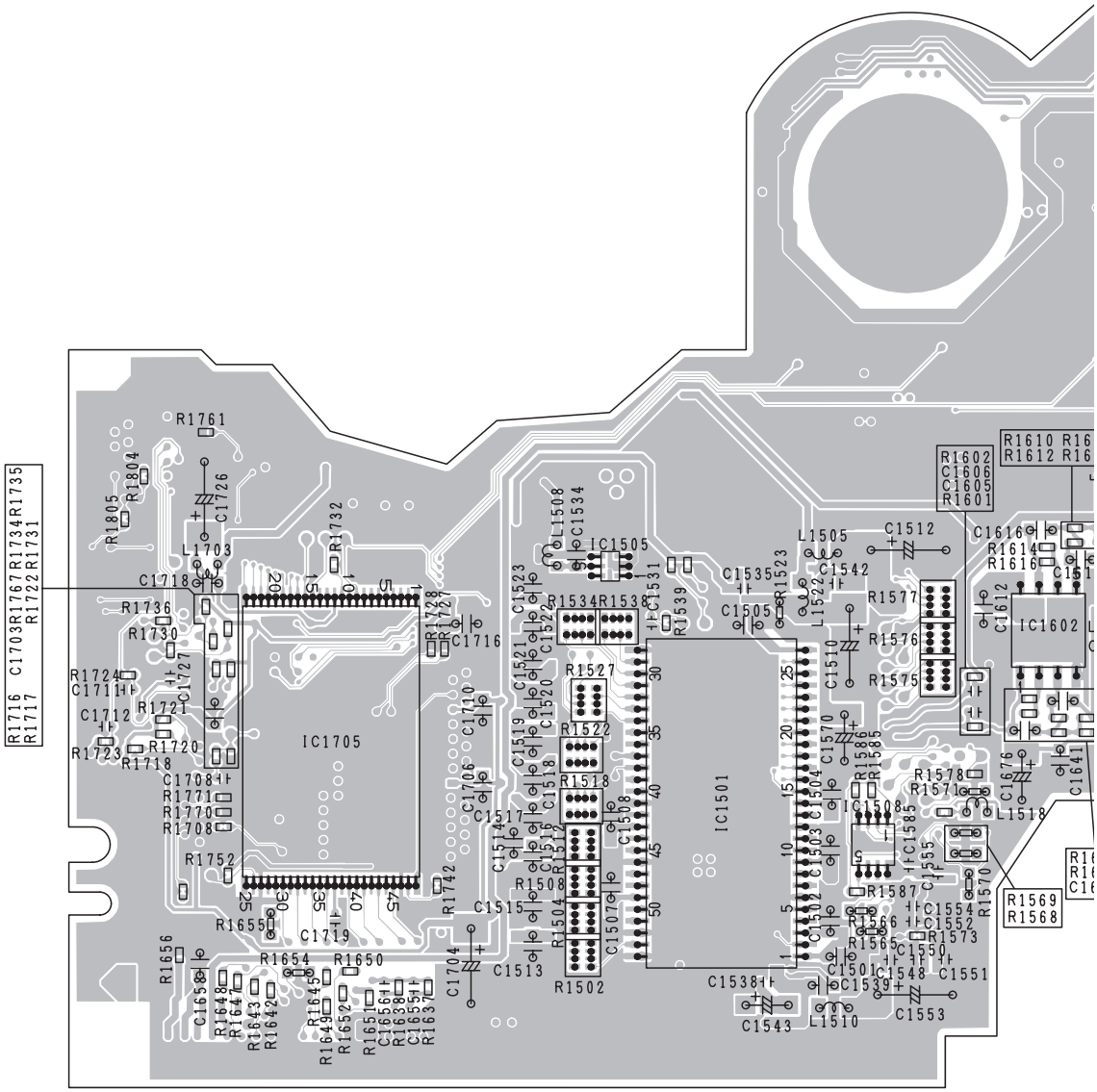

D

SIDE B

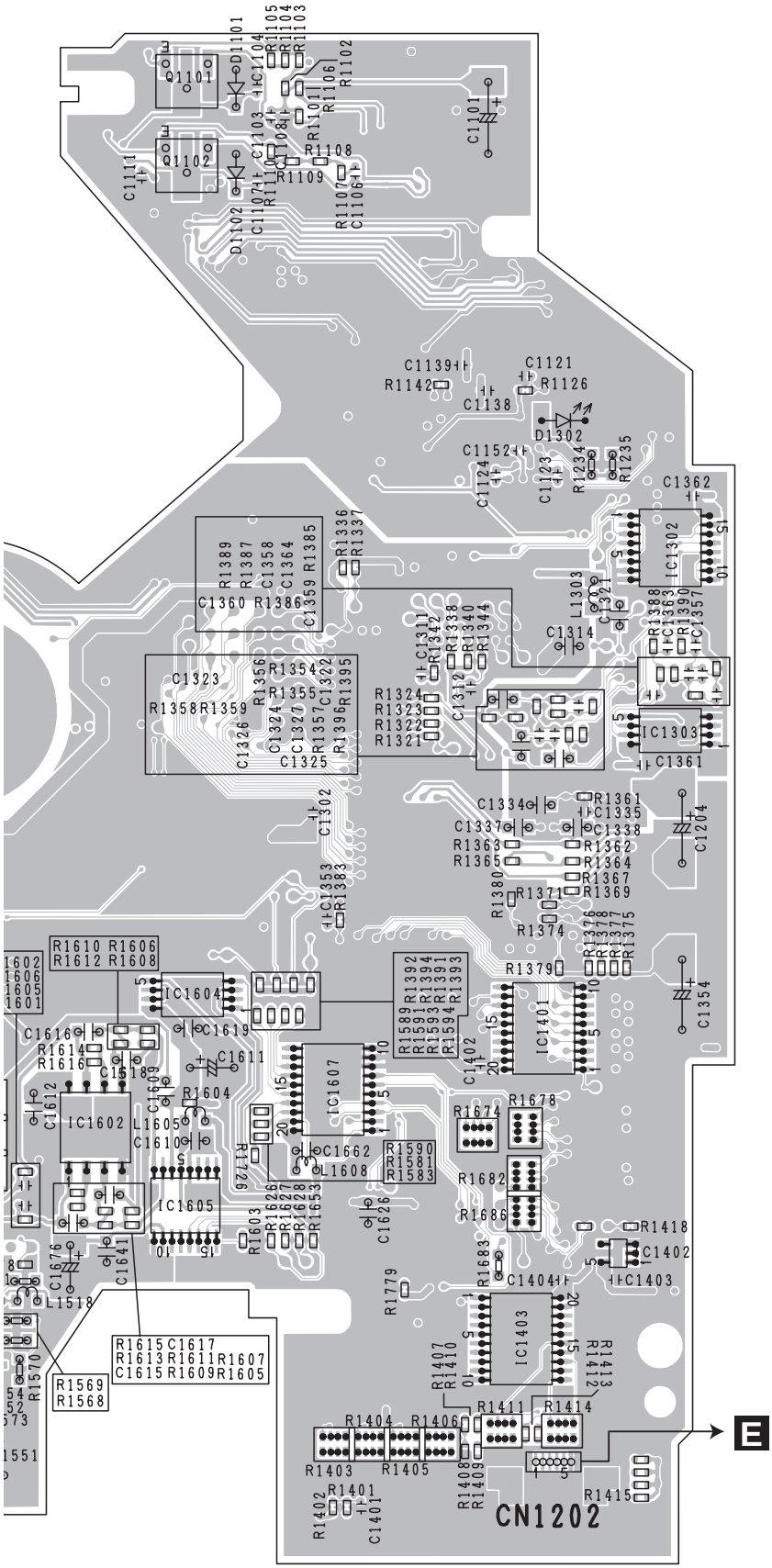

IC,Q

Q1101

Q1102

IC1302

IC1303

IC1604

IC1401

IC1505

IC1607

IC1602

IC1605

IC1705

IC1402

IC1501

IC1508

IC1403

D

4.5 COMPOUND UNIT(A) AND COMPOUND UNIT(B)

E COMPOUND UNIT(A)

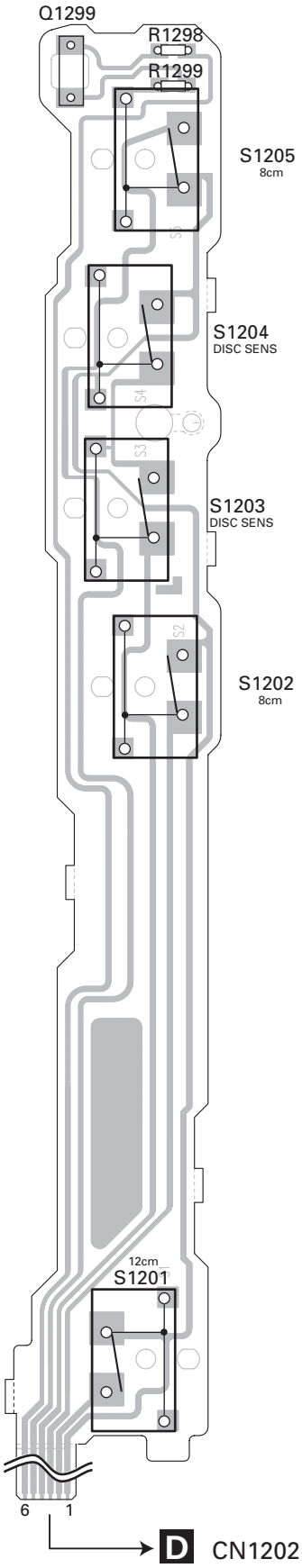

F COMPOUND UNIT(B)

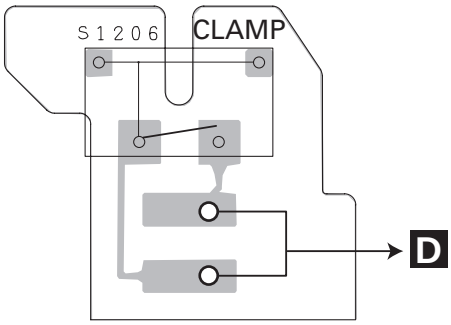

E F

4.6 CONNECTOR PCB

L CONNECTOR PCB SIDE A

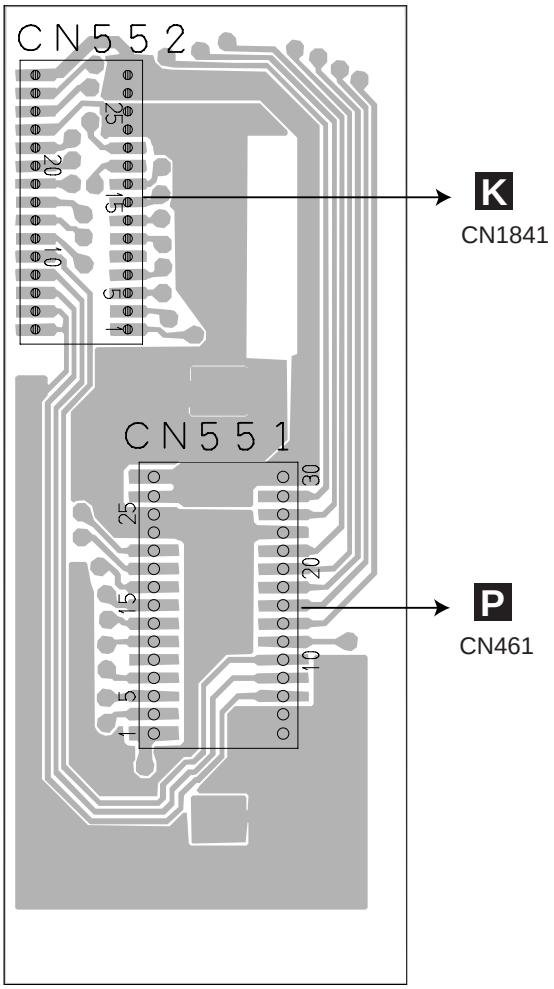

L CONNECTOR PCB SIDE B

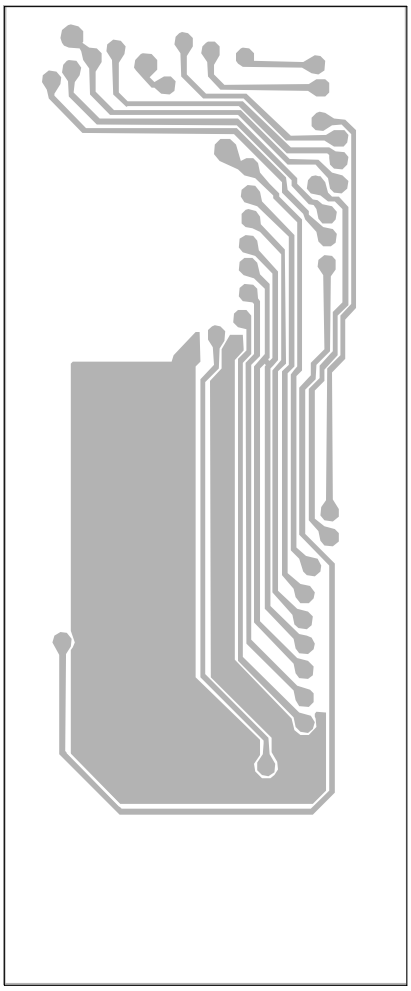

4.7 MONITOR PCB

G MONITOR PCB

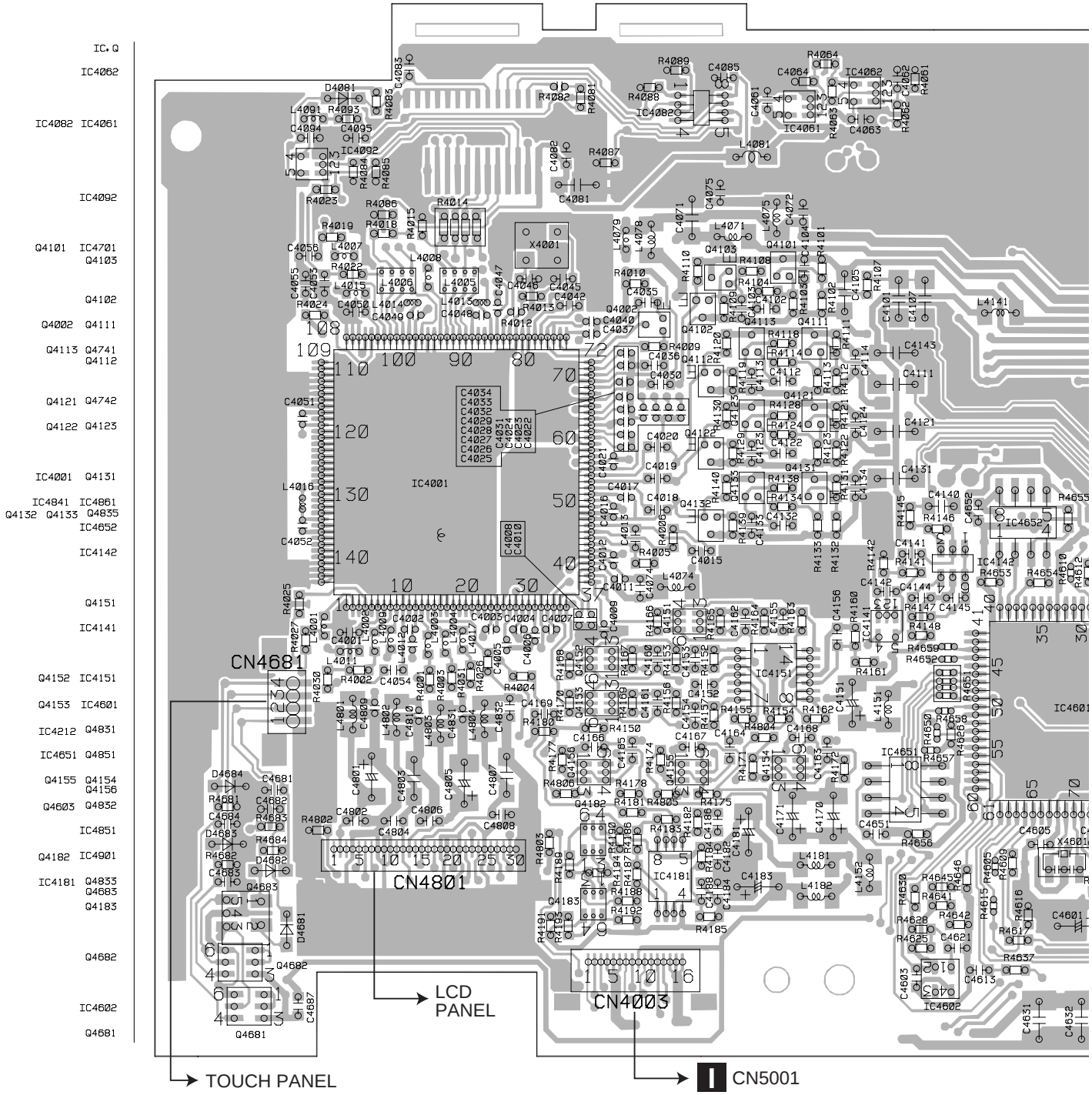

A

B

C

D

E

F

SIDE A

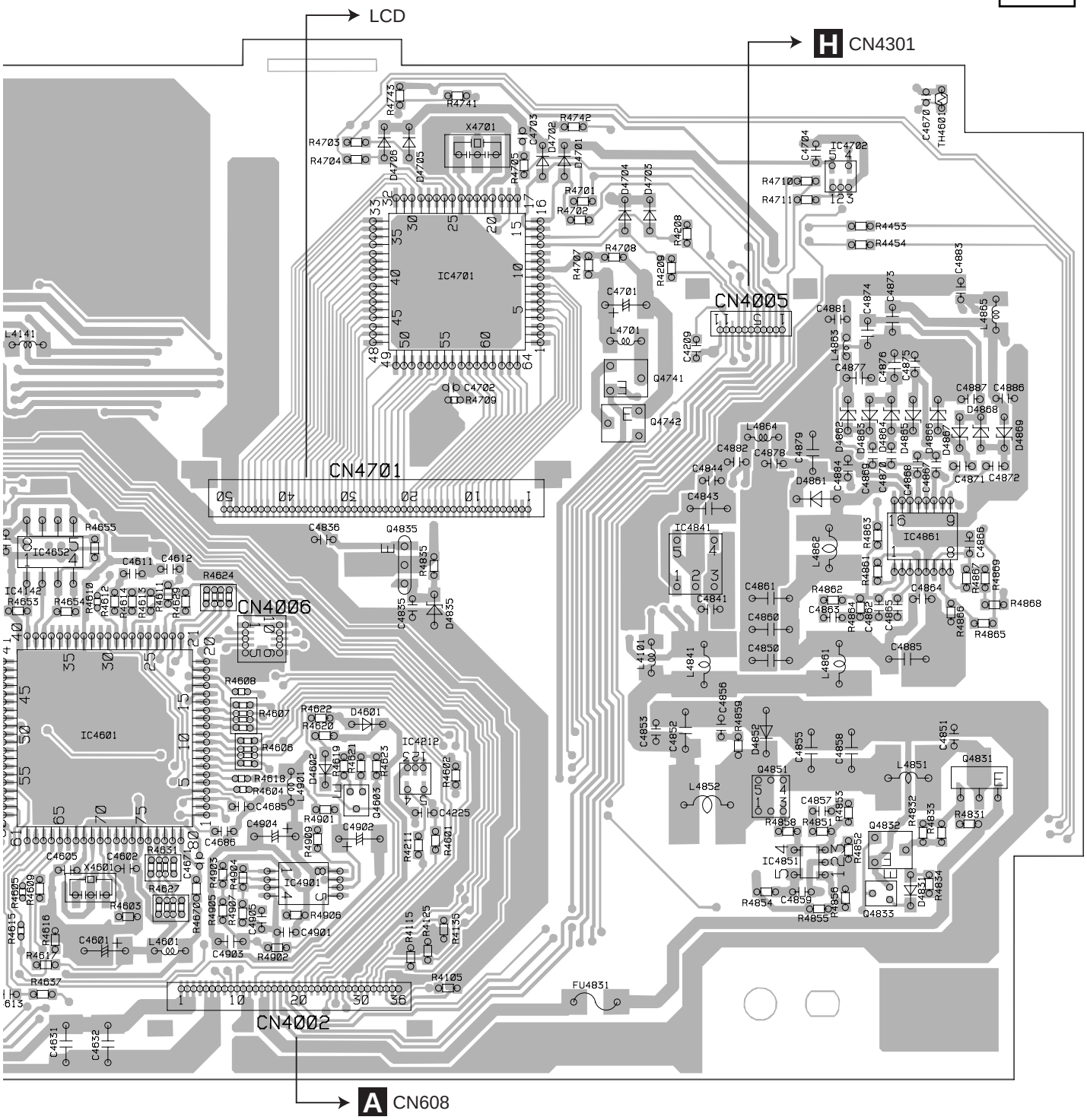

G

G MONITOR PCB

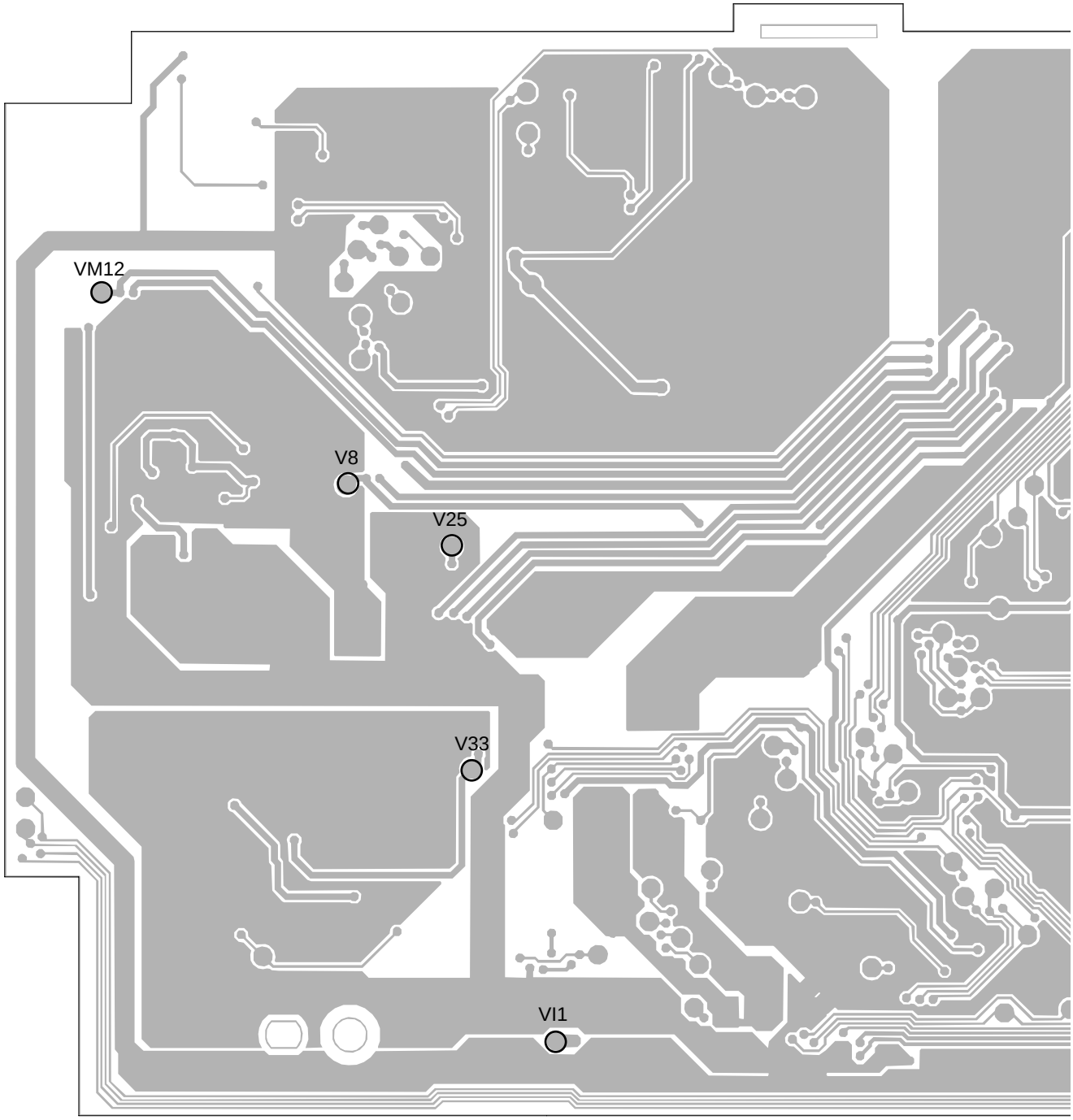

A

SIDE B

B

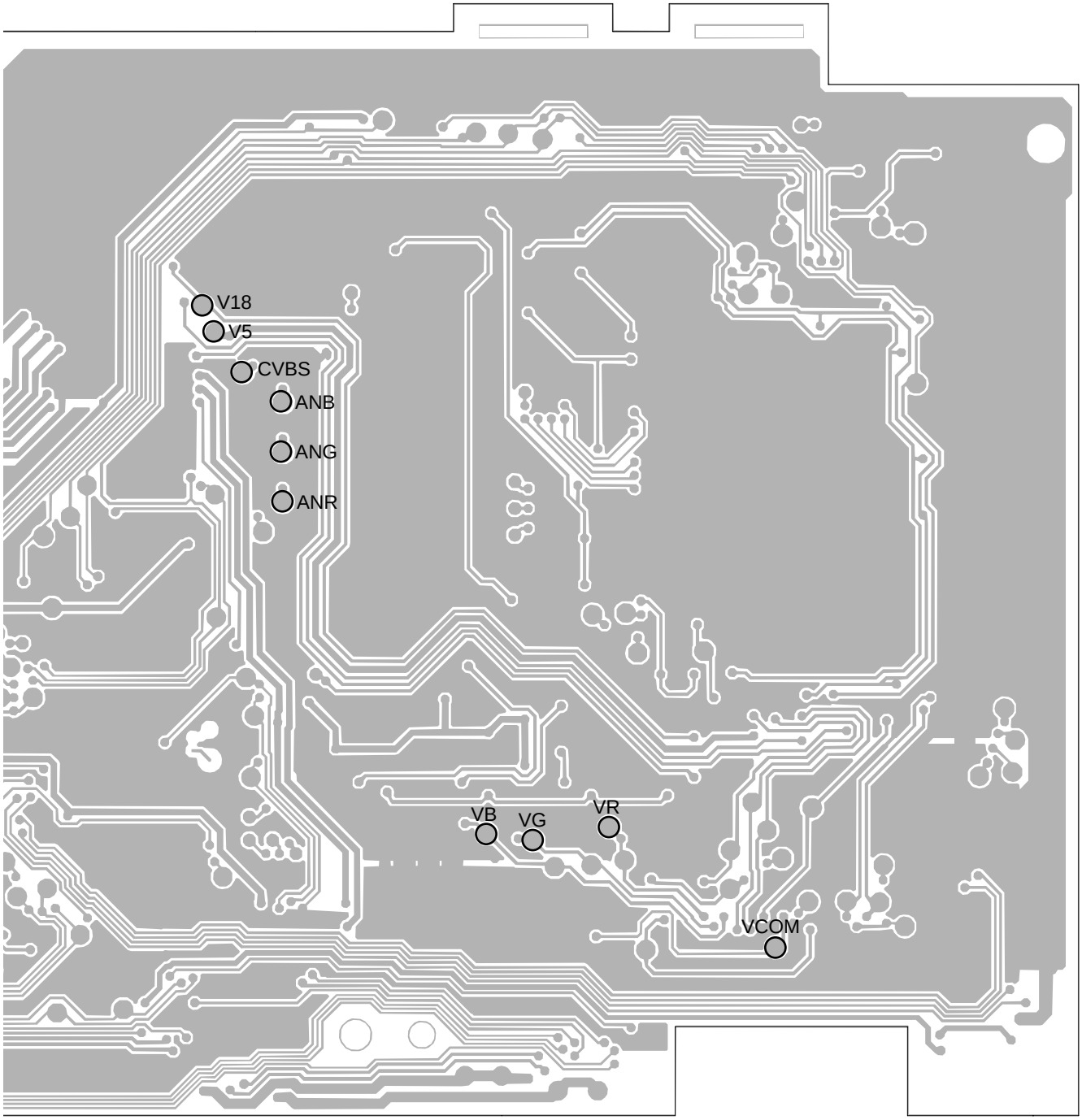

C

D

E

F

G

4.8 UPPER PCB

H UPPER PCB

SIDE A

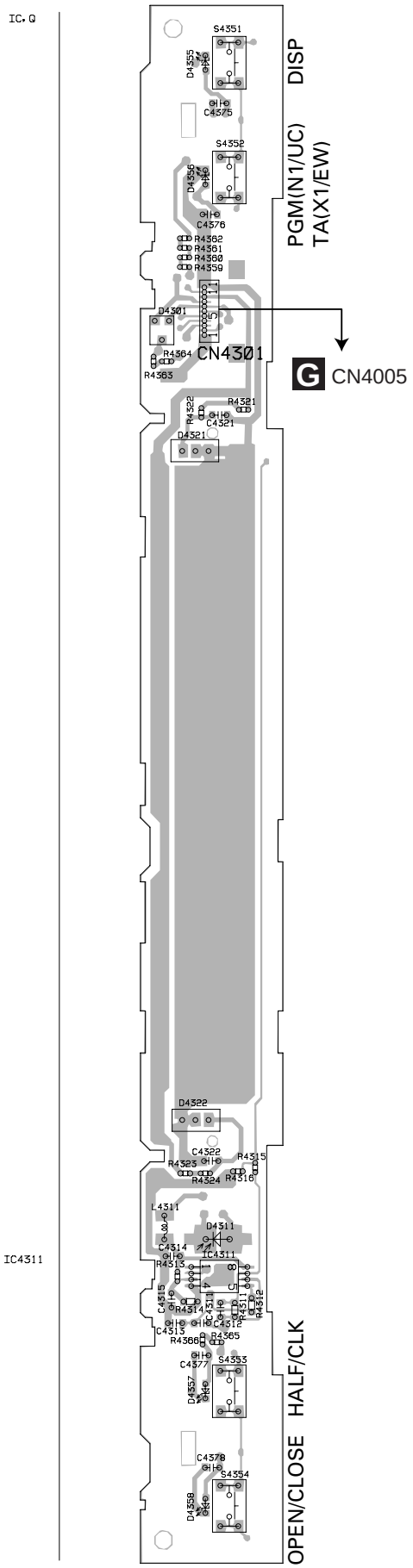

G CN4005

H UPPER PCB

SIDE B

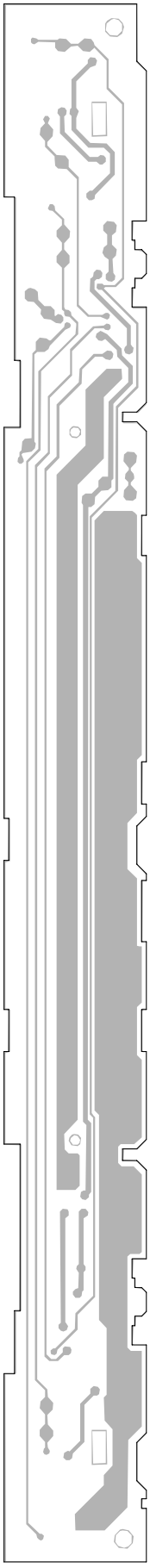

4.9 INVERTER PCB

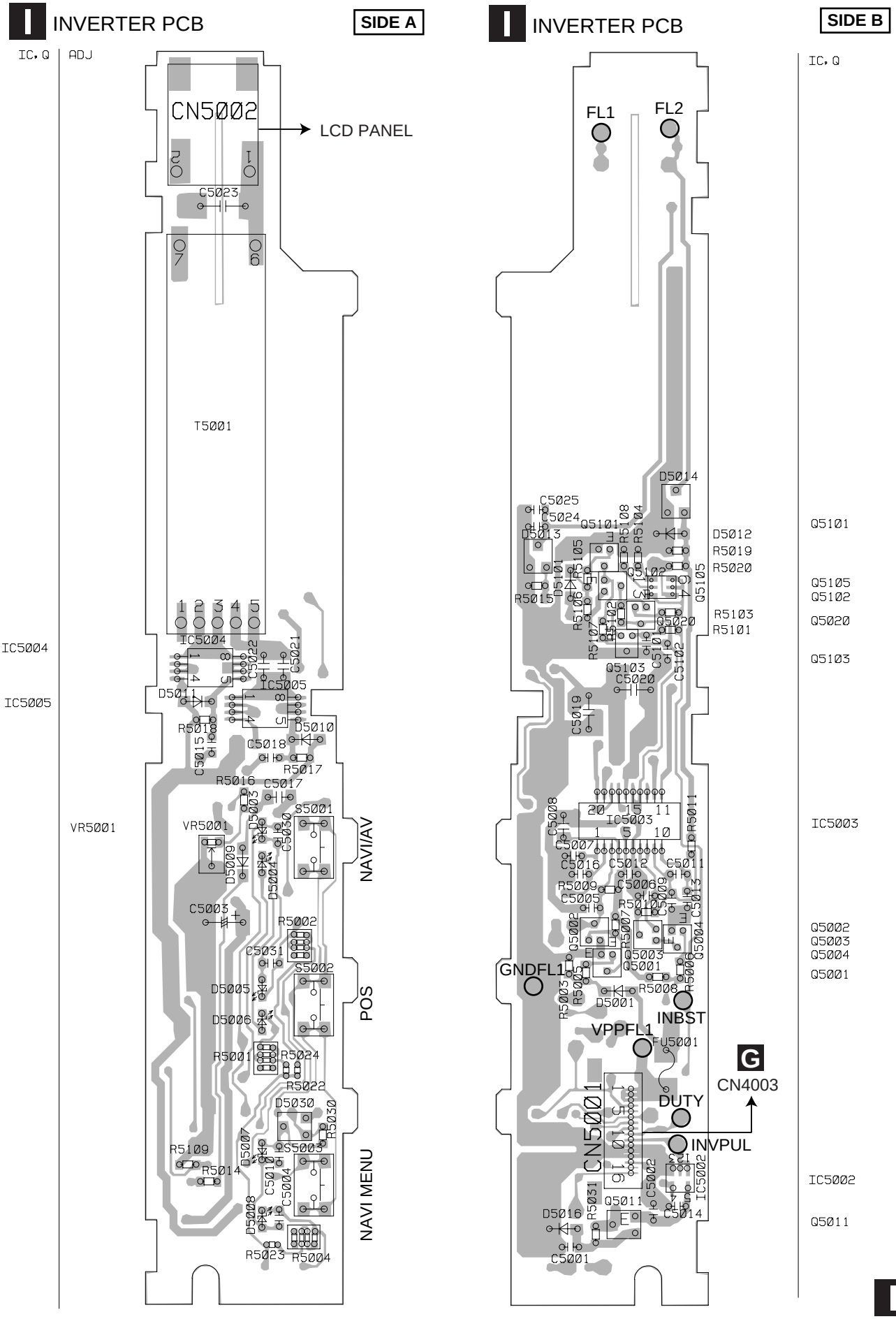

4.10 RELAY PCB

J RELAY PCB

SIDE A

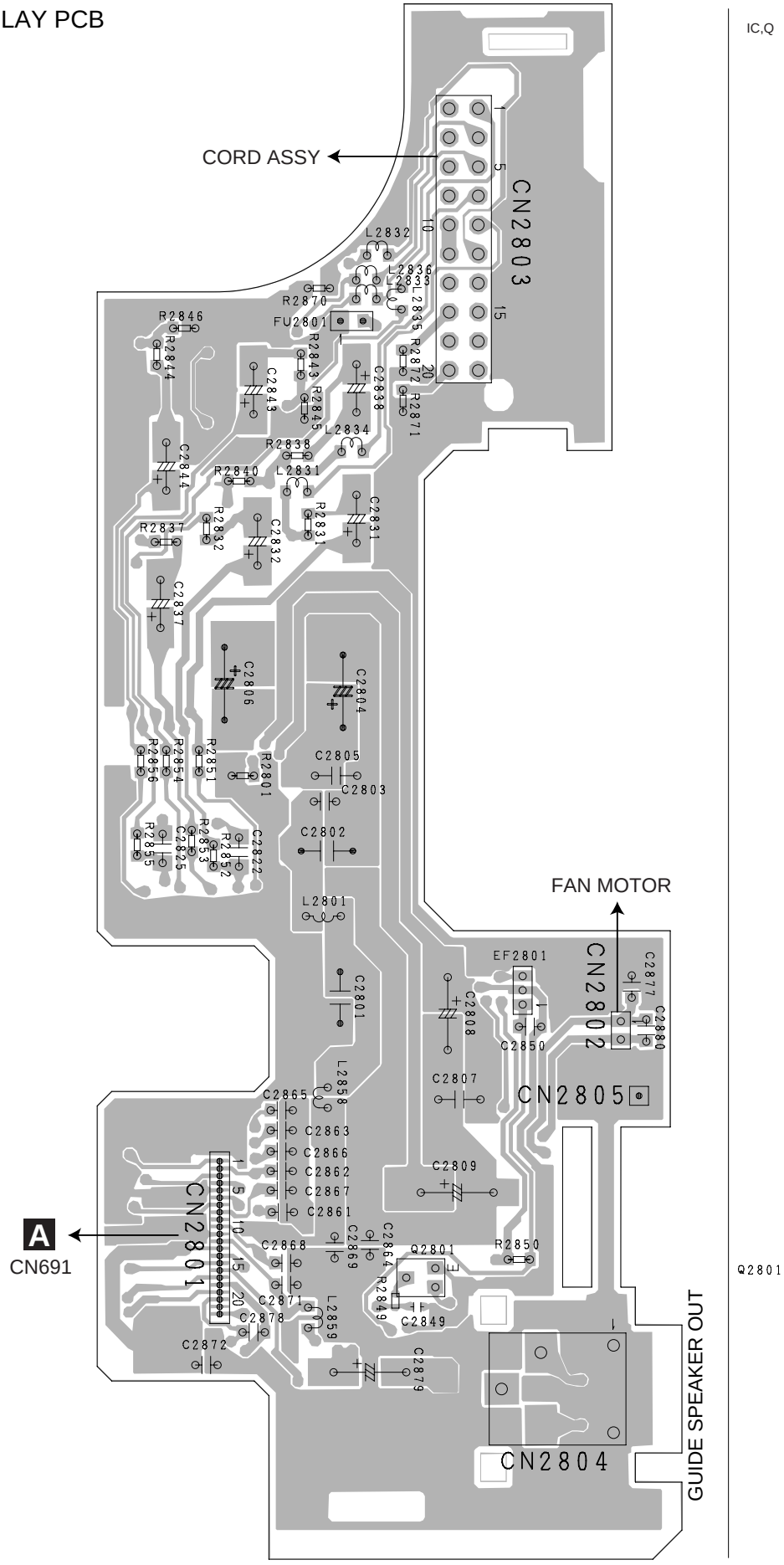

J

J RELAY PCB

SIDE B

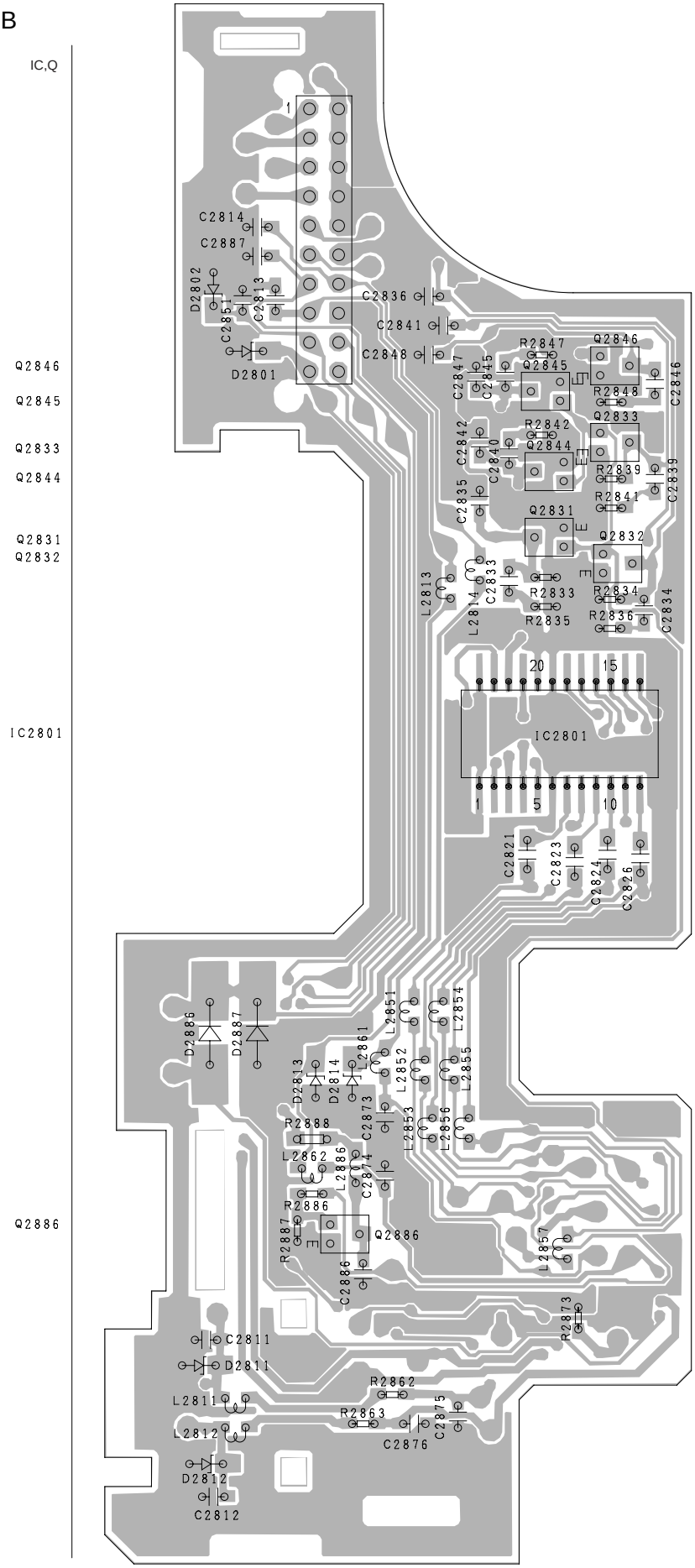

J

4.11 MOTHER PCB

K MOTHER PCB

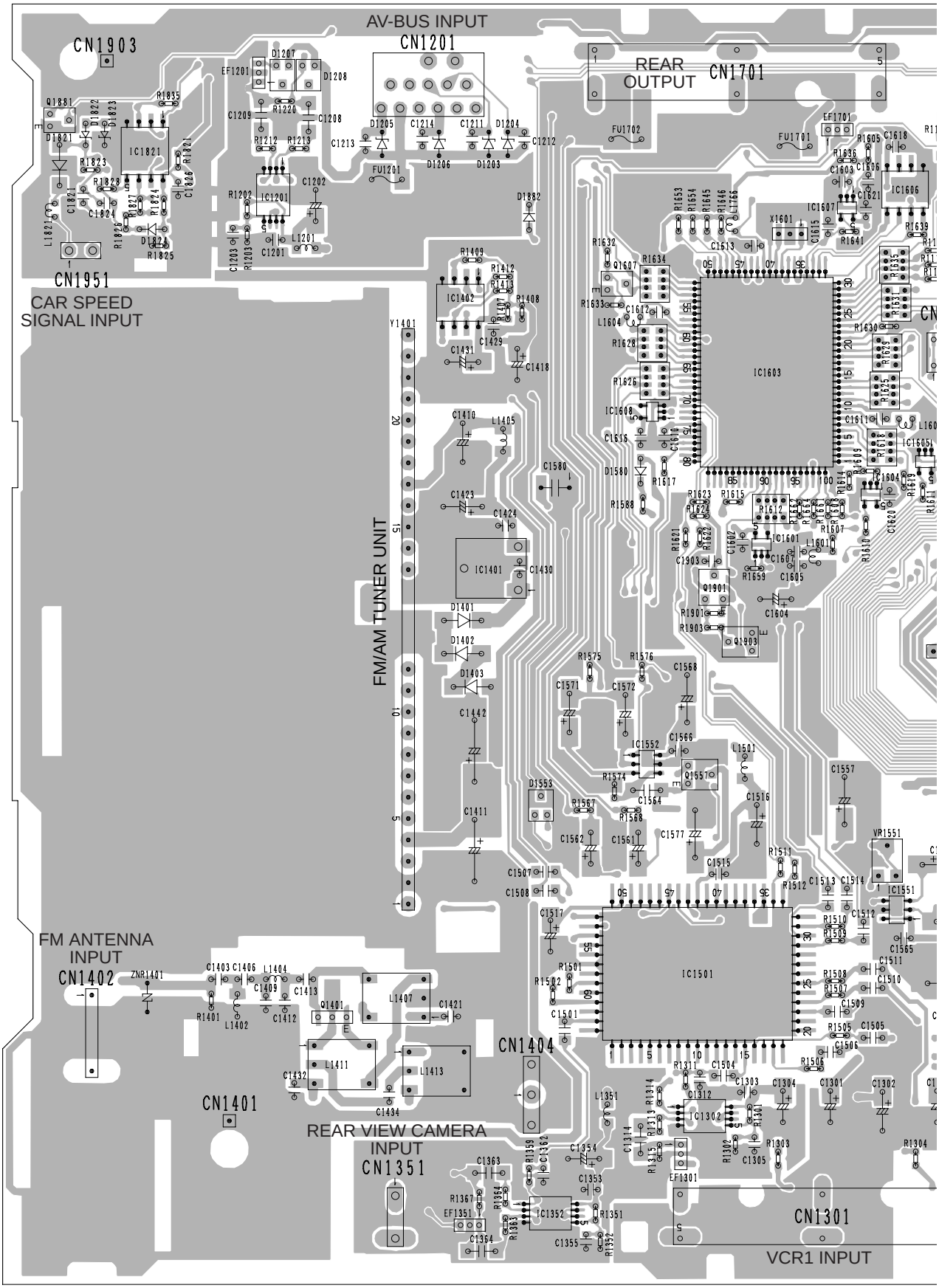

SIDE A

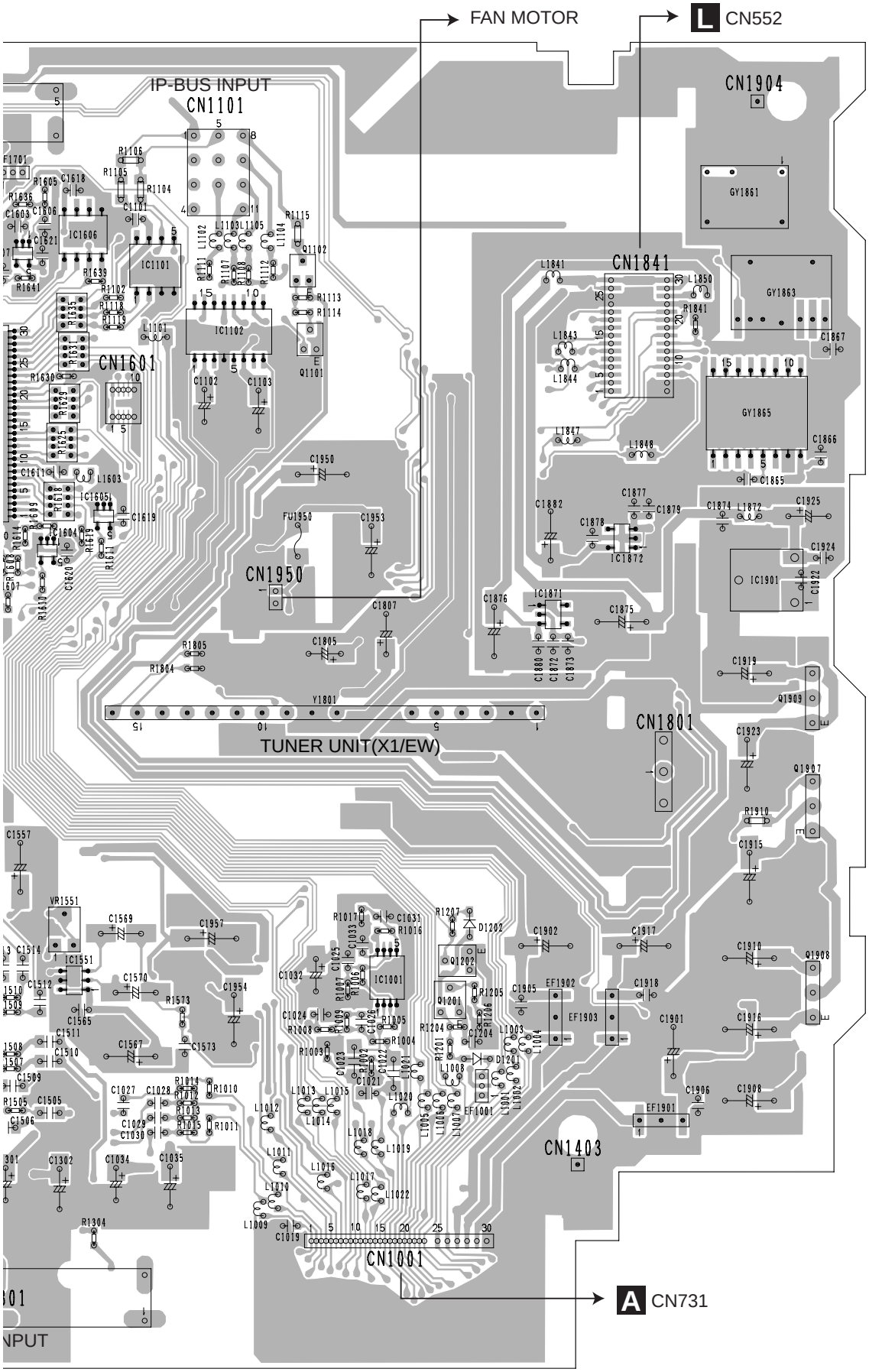

IC,Q

Q1881
IC1821
IC1607
IC1606 IC1201
IC1101 Q1102
IC1102 Q1607
IC1402
Q1101
IC1603
IC1608
IC1605
IC1604
IC1872
IC1601 IC1901
IC1871
IC1401
Q1901
Q1903
Q1909
Q1907
IC1552
Q1557
VR1551
IC1001
Q1908 IC1551 Q1202
Q1201
IC1501
Q1401
IC1302
IC1352

K

K MOTHER PCB

IC,Q

Q1822
IC1602
Q1821
Q1403
Q1404
Q1406
Q1601
Q1582
Q1871 Q1405 Q1951
Q1583
Q1872
Q1581
Q1802 Q1803
Q1801
IC1902
Q1559
Q1558 Q1555
Q1556
Q1902 Q1952 Q1551
Q1402 Q1904
Q1906
Q1552
Q1905
IC1002
IC1301

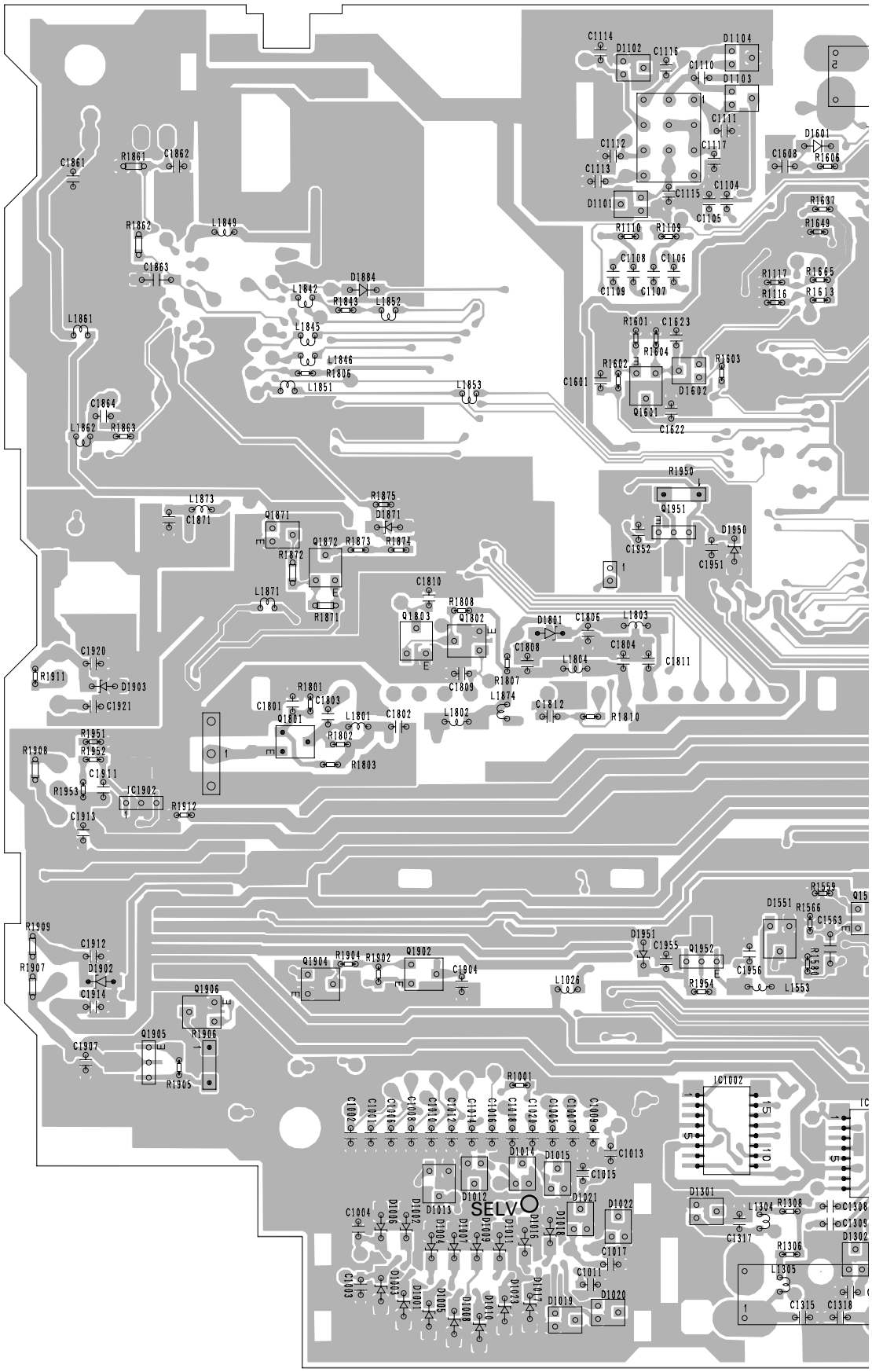

SIDE B

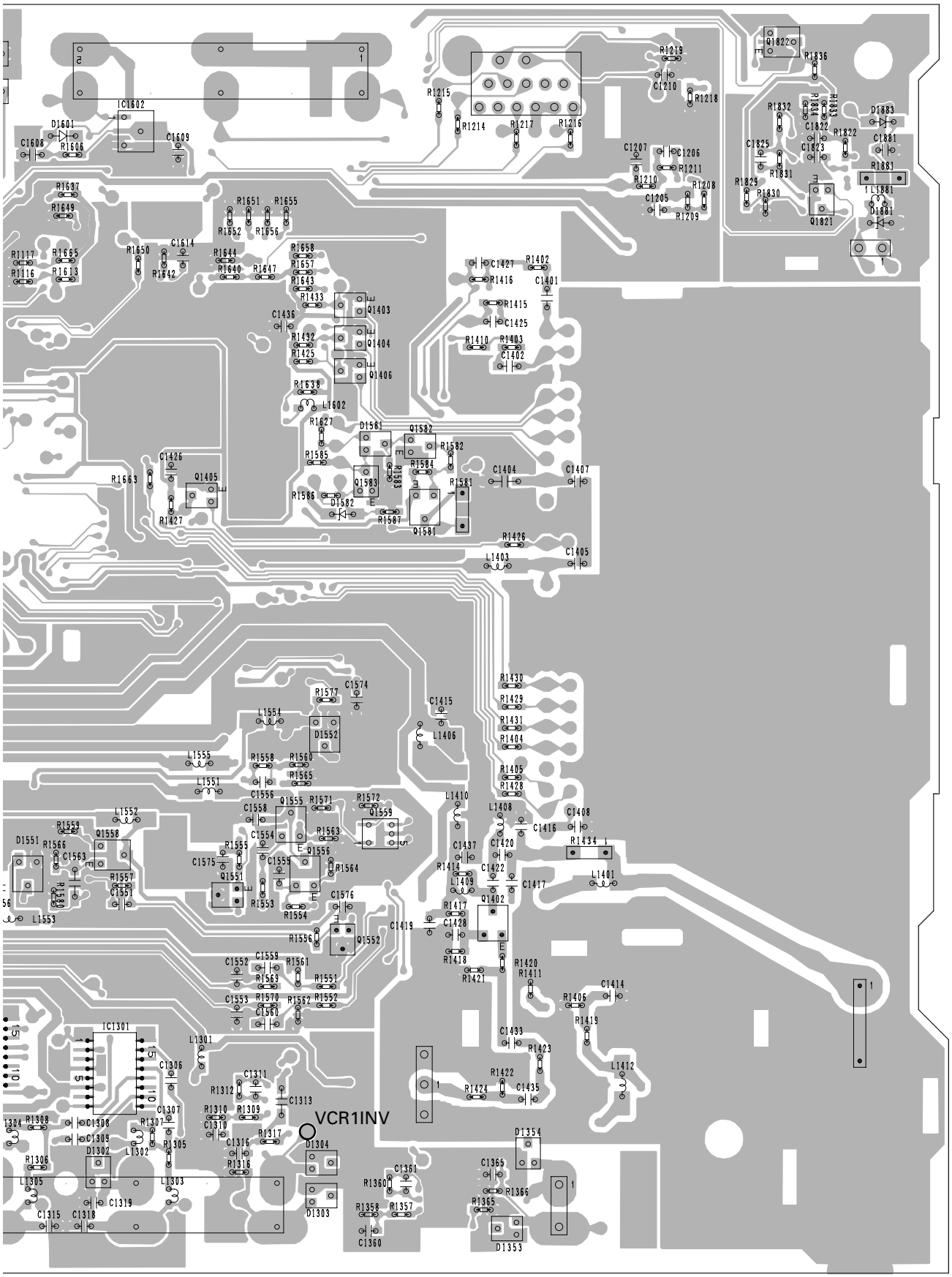
IC1602
D1601
C1608
R1606
C1609
R1637
R1649
R1117
R1116
R1665
R1613
R1650
C1614
R1642
R1644
R1640
R1647
R1651
R1655
R1652
R1656
R1658
R1657
R1643
R1433
Q1403
C1436
R1432
Q1404
R1425
Q1406
R1638
L1602
R1627
D1581
Q1582
R1585
R1582
R1584
R1583
Q1583
R1586
D1582
R1587
Q1581
R1581
C1426
R1663
Q1405
R1427
C1427
R1416
R1402
C1401
R1415
C1425
R1410
R1403
C1402
C1404
C1407
R1426
L1403
C1405
R1215
R1214
R1217
R1216
R1219
C1210
R1218
C1207
C1206
R1211
R1210
R1208
C1205
R1209
Q1822
R1836
R1832
R1834
R1833
C1822
R1822
C1823
C1825
R1831
R1829
R1830
Q1821
D1883
C1881
R1881
L1881
D1881
R1574
C1577
L1554
D1552
C1415
L1406
R1430
R1429
R1431
R1404
R1405
R1428
L1555
R1558
R1560
R1565
L1551
C1556
Q1555
R1571
R1572
Q1559
L1552
R1559
Q1558
D1551
R1566
C1563
R1568
R1557
C1551
L1553
C1558
C1554
R1563
R1555
C1575
Q1551
R1553
R1556
R1564
C1555
R1554
C1576
R1556
Q1552
L1410
L1408
C1408
C1416
R1434
C1437
C1420
R1414
L1409
C1422
C1417
L1401
R1417
C1428
C1419
Q1402
R1418
R1421
R1420
R1411
C1414
R1406
R1419
C1552
C1559
R1561
R1569
R1551
C1553
R1570
R1562
R1552
C1560
IC1301
L1301
C1306
C1433
R1423
L1412
R1422
R1424
C1435
R1312
C1311
C1313
R1310
R1309
C1310
C1307
R1307
R1308
C1308
C1309
R1305
R1306
D1302
L1302
L1305
L1303
C1315
C1318
C1319
R1317
C1316
R1316
D1304
D1303
VCR1INV
C1361
R1360
R1358
R1357
C1360
C1365
R1366
R1365
D1354
D1353

4.12 GPS UNIT

P GPS UNIT

SIDE A

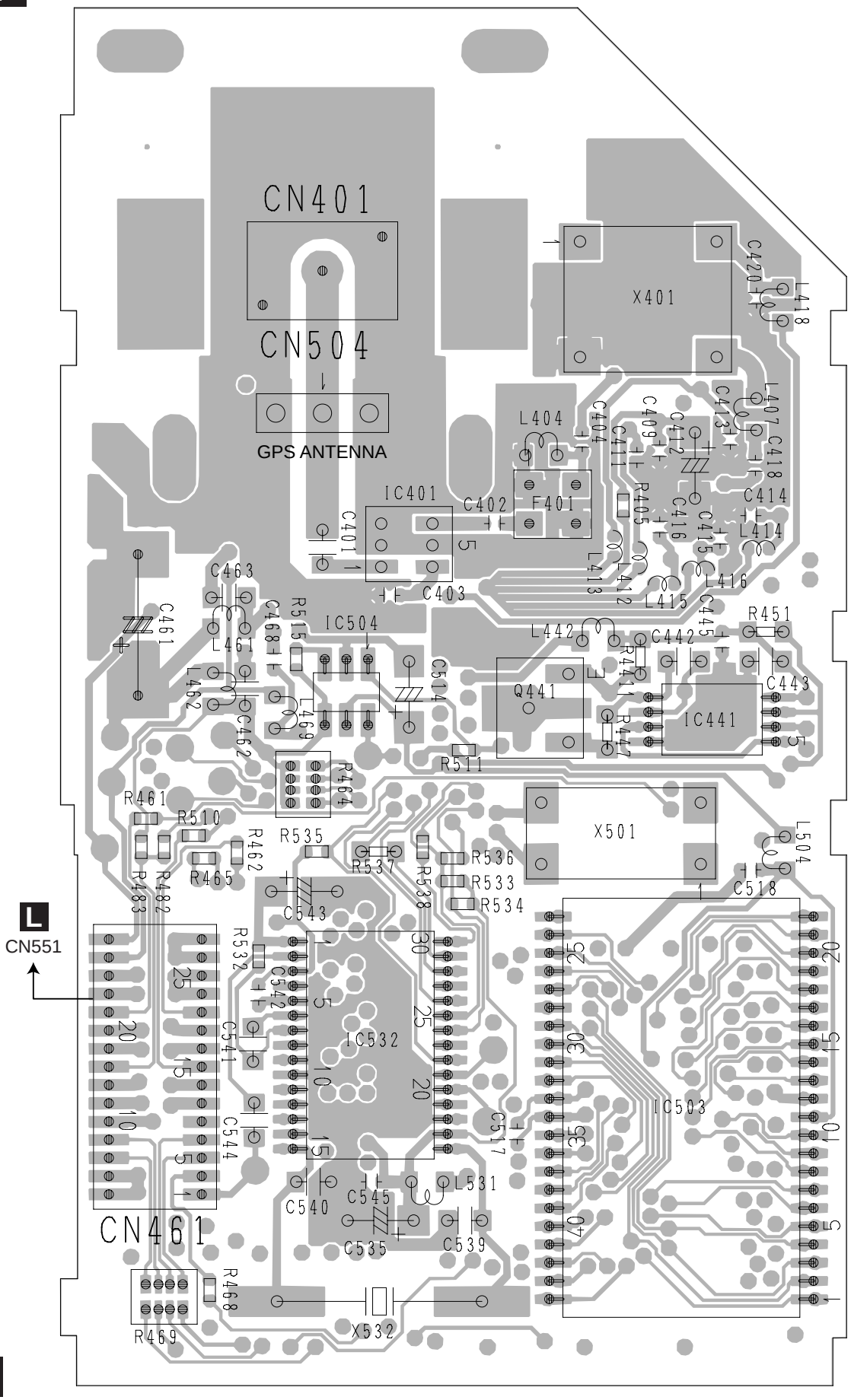

P

P GPS UNIT

SIDE B

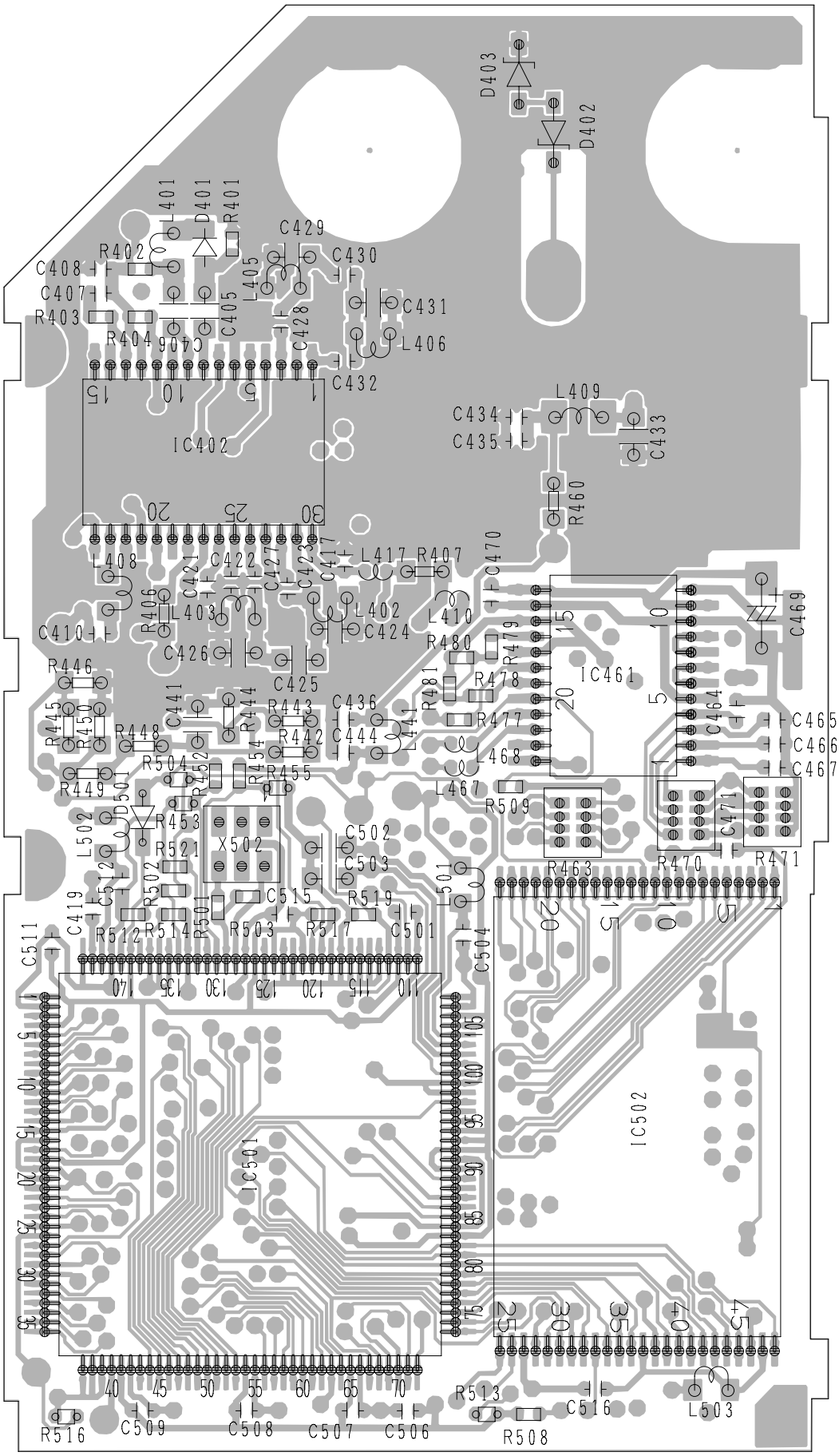

IC,Q

IC402

IC461

IC502

IC501

4.13 MAIN UNIT

M MAIN UNIT

SIDE A

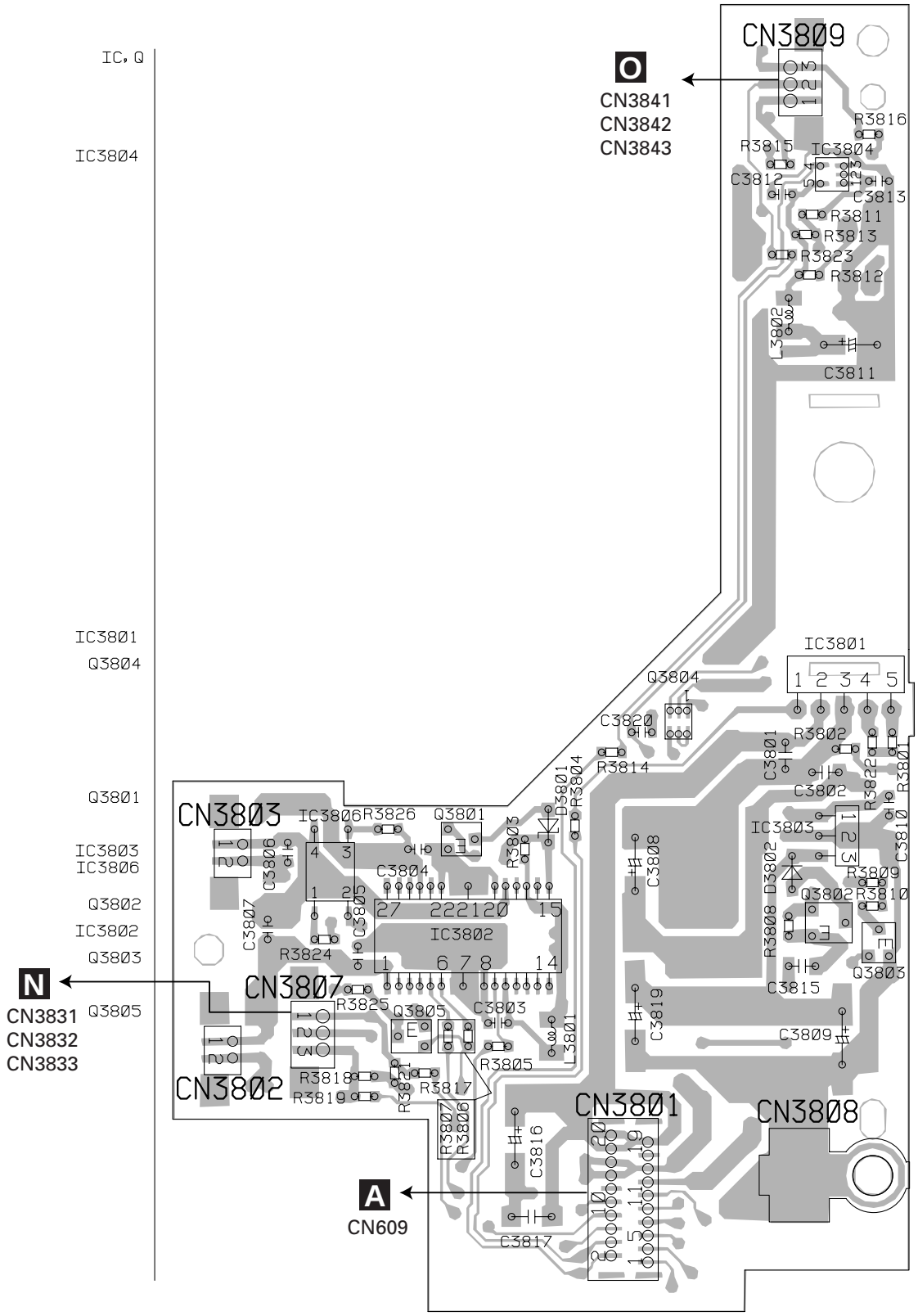

M

M MAIN UNIT

SIDE B

IC, Q

IC3805

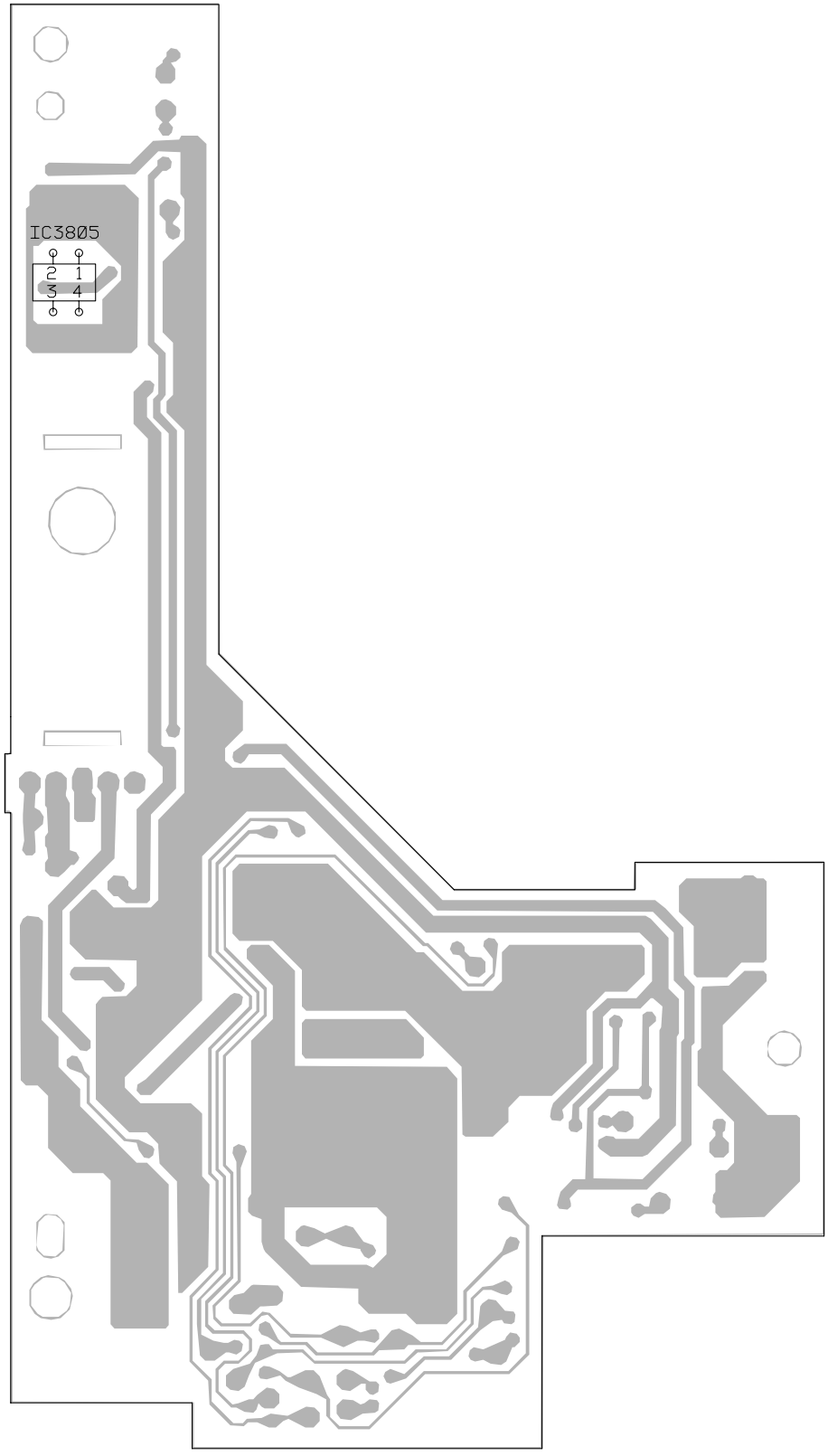

4.14 SW UNIT AND VOLUME UNIT

A

N SW UNIT

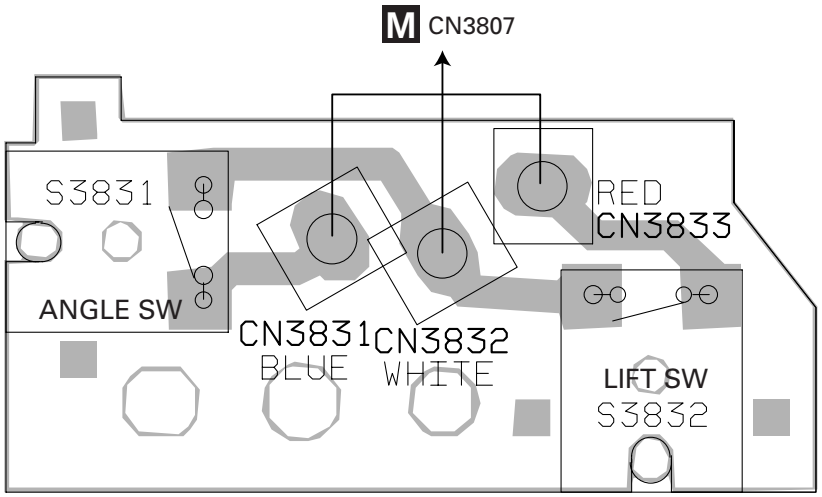

B

C

D

O VOLUME UNIT

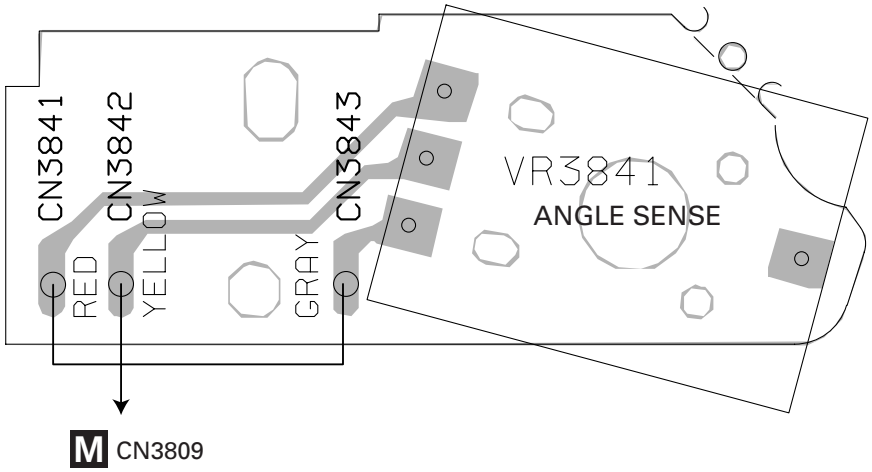

E

F

N O

5. ELECTRICAL PARTS LIST

NOTE:
- *Parts whose parts numbers are omitted are subject to being not supplied.*
- *The part numbers shown below indicate chip components.*

Chip Resistor
RS1/◯S◯◯◯J,RS1/◯◯S◯◯◯J
Chip Capacitor (except for CQS.....)
CKS....., CCS....., CSZS.....

A

Unit Number:CWM9128(AVIC-X1/EW)
Unit Number:CWM9129(AVIC-N1/UC)
Unit Name:CC Unit

MISCELLANEOUS

Circuit Symbol and No.		Part No.
IC 1	IC	K4S561632E-TL75
IC 2	IC	UPD705103GM-180
IC 3	IC	HY57V561620CLT-H
IC 4	IC	TC7SZ08FU
IC 5	IC	PD6336B
IC 101	IC	TC74LCX08FT
IC 102	IC	TC7SH04FU
IC 103	IC	TC74LCX245FT
IC 104	IC	TC74LCX245FT
IC 105	IC	TC74LCX245FT
IC 106	IC	TC74LCX245FT
IC 107	IC	TC74LCX541FT
IC 108	IC	TC74LCX541FT
IC 109	IC	TC74LCX541FT
IC 110	IC(X1/EW)	PD6461A
	IC(N1/UC)	PD6466A
IC 111	IC(X1/EW)	PD6462A
	IC(N1/UC)	PD6467A
IC 112	IC	TC7SH00FU
IC 113	IC	M5M5V216ATP-70HI
IC 114	IC	TC7SH08FU
IC 201	IC	MB86291APFVS-G-DL
IC 301	IC	M51957BFP
IC 302	IC	TC7SH08FU
IC 304	IC	AK4351VT
IC 305	IC	AK5381VT
IC 309	IC	TC7SH08FU
IC 601	IC	PD5937A
IC 602	IC	TC74VHCT08AFT
IC 603	IC	TC7SH08FU
IC 604	IC	TC7SH08FU
IC 605	IC	TC7SH08FU
IC 608	IC	TC7WT125FU
IC 611	IC	TC7S04FU
IC 612	IC	S-80840CNMC-B8Z
IC 613	IC	TC7SH00FU
IC 691	IC	UPD4721GS
IC 751	IC	CXA1645M
IC 752	IC	NJM2137V
IC 753	IC	NJM2235V
IC 754	IC	NJM2561F1
IC 755	IC	NJM2561F1
IC 756	IC	NJM2235V
IC 757	IC	TC7SET08FU
IC 758	IC	TC7SZ08FU
IC 801	IC	PQ018EZ01Z
IC 803	IC	TPS5102IDBT
IC 804	IC	TPS5102IDBT
IC 805	IC	TPS5103IDB
IC 806	IC	S-L2980A33MC-C6S
IC 807	IC	TPD1018F
IC 808	IC	S-812C52AUA-C3G
IC 810	IC	S-812C56AUA-C3K
IC 2401	IC	PML009A
IC 2402	IC	TC7W66FU
IC 2403	IC	TDA7052BT
IC 2404	IC	NJM2058V
IC 2405	IC	PAL007A
IC 2407	IC	NJM3403AV
IC 2408	IC	NJM2107F
IC 2551	IC	TC7WT125FU
IC 2552	IC	NJM2068V
IC 2553	IC	NJM2068V
IC 2601	IC	NJM3403AV
IC 2701	IC	TC7SH08FU
IC 2702	IC	TC7SH14FU
Q 201	Transistor	UMD2N
Q 301	Transistor	DTC114EU
Q 601	Transistor	2SC4081
Q 602	Transistor	UMD2N
Q 621	Transistor	IMD2A
Q 691	Transistor	2SD1767
Q 692	Transistor	IMD3A
Q 704	Transistor	2SA1576
Q 731	Transistor	IMD3A
Q 751	Transistor	2SC4081
Q 752	Transistor	2SC4081
Q 754	Transistor	2SC4081
Q 801	Transistor	2SB1260
Q 802	Transistor	DTC114EU
Q 803	Transistor	2SA1834F5
Q 804	Transistor	DTC114EU
Q 805	FET	RSQ030P03
Q 806	Transistor	DTC144EU
Q 807	Transistor	2SB1260
Q 808	Transistor	DTC114EU
Q 809	Transistor	2SA1797
Q 810	Transistor	DTC114EU

Circuit Symbol and No.		Part No.
Q 811	FET	RK4936
Q 814	Transistor	DTC114EU
Q 815	FET	RK4936
Q 816	FET	RK4936
Q 819	FET	RK4936
Q 820	FET	RK4936
Q 821	Transistor	2SA1834F5
Q 822	Transistor	DTC114EU
Q 823	Transistor	2SC4081
Q 824	Transistor	2SB1184F5
Q 825	Transistor	2SC4081
Q 828	Transistor	IMX1
Q 829	Transistor	2SB1184F5
Q 830	Transistor	UMF23N
Q 832	FET	RSQ030P03
Q 835	Transistor	2SC4081
Q 837	Transistor	2SC4081
Q 838	Transistor	DTC144EU
Q 839	Transistor	UMD2N
Q 840	Transistor	2SA1576
Q 843	Transistor	2SD1767
Q 951	Transistor	DTC124EU
Q 971	Transistor	IMX2
Q 972	Transistor	IMD3A
Q 973	Transistor	2SD1767
Q 2401	Transistor	UMD2N
Q 2402	Transistor	DTC323TU
Q 2403	Transistor	DTC323TU
Q 2408	Transistor	UMD2N
Q 2409	Transistor	DTC323TU
Q 2410	Transistor	UMD2N
Q 2414	Transistor	DTC124EU
Q 2415	Transistor	DTC124EU
Q 2416	Transistor	UMD2N
Q 2417	Transistor	DTC323TU
Q 2418	Transistor	DTC323TU
Q 2419	Transistor	UMD2N
Q 2420	Transistor	DTC114EU
Q 2421	Transistor	UMD2N
Q 2422	Transistor	2SC4081
Q 2427	Transistor	DTC124EU
Q 2428	Transistor	DTC124EU
Q 2603	Transistor	UMD2N
Q 2604	Transistor	DTC323TU
Q 2605	Transistor	DTC323TU
Q 2606	Transistor	UMD2N
Q 2607	Transistor	DTC323TU
Q 2608	Transistor	UMD2N
Q 2610	Transistor	UMD2N
Q 2611	Transistor	UMD2N
Q 2701	Transistor	DTC114TU
Q 2702	Transistor	DTC144EU
Q 2703	Transistor	2SA1577
Q 2704	Transistor	UMH1N
Q 2705	Transistor	2SA1577
Q 2706	Transistor	IMD2A
Q 2707	Transistor	DTC144EU
Q 2708	Transistor	2SA1577
Q 2709	Transistor(X1/EW)	DTC144EU
Q 2710	Transistor(X1/EW)	2SA1577

Circuit Symbol and No.		Part No.
Q 2711	Transistor(X1/EW)	UMH1N
Q 2712	Transistor(X1/EW)	2SA1577
Q 2713	Transistor	IMD2A
Q 2714	Transistor	2SA1576
Q 2715	Transistor	2SD1767
Q 2716	Transistor	DTC124EU
Q 2717	Transistor	DTC114EU
D 610	Diode	1SS355
D 691	Diode	HZU8R2(B1)
D 692	Diode	UDZS20(B)
D 693	Diode	UDZS20(B)
D 694	Diode	UDZS20(B)
D 695	Diode	UDZS20(B)
D 696	Diode	UDZS20(B)
D 697	Diode	UDZS20(B)
D 698	Diode	UDZS20(B)
D 699	Diode	UDZS20(B)
D 707	Diode	DAN202U
D 708	Diode	5KP22A
D 731	Diode	UDZS6R8(B)
D 732	Diode	UDZS6R8(B)
D 733	Diode	UDZS6R8(B)
D 734	Diode	UDZS6R8(B)
D 735	Diode	UDZS6R8(B)
D 736	Diode	UMZ6R8N
D 737	Diode	UMZ6R8N
D 738	Diode	UMZ6R8N
D 739	Diode	UMZ6R8N
D 740	Diode	UMZ6R8N
D 742	Diode	UDZS6R8(B)
D 743	Diode	UDZS6R8(B)
D 744	Diode	UDZS6R8(B)
D 745	Diode	UDZS6R8(B)
D 746	Diode	UDZS6R8(B)
D 747	Diode	UDZS6R8(B)
D 748	Diode	UDZS6R8(B)
D 749	Diode	UDZS6R8(B)
D 750	Diode	UDZS10(B)
D 753	Diode	UDZS6R8(B)
D 754	Diode	UDZS6R8(B)
D 802	Diode	RB400D
D 803	Diode	RB400D
D 804	Diode	RB400D
D 805	Diode	RB400D
D 806	Diode	RB400D
D 807	Diode	RB060L-40
D 808	Diode	RB060L-40
D 809	Diode	RB060L-40
D 810	Diode	RB060L-40
D 812	Diode	HZU6R8(B2)
D 814	Diode	KS926S2
D 815	Diode	HZU7R5(B3)
D 816	Diode	UDZS18(B)
D 817	Diode	UDZS20(B)
D 818	Diode	RB060L-40
D 820	Diode	S1G-6904G2P
D 821	Diode	1SS355
D 822	Diode	1SS355
D 828	Diode	S1G-6904G2P
D 830	Diode	RB500V-40

Circuit Symbol and No.		Part No.
D 831	Diode	RB500V-40
D 832	Diode	S1G-6904G2P
D 833	Diode	1SS400
D 971	Diode	RB751V40
D 972	Diode	RB751V40
D 973	Diode	HZU8R2(B1)
D 974	Diode	UDZ12(B)
D 2404	Diode	DAN202U
D 2405	Diode	DAP202U
D 2406	Diode	1SS355
D 2407	Diode	UDZS4R7(B)
D 2408	Diode	DAP202U
D 2409	Diode	UDZS8R2(B)
D 2410	Diode	DAN202U
D 2411	Diode	DAN202U
D 2412	Diode	DAN202U
D 2413	Diode	DAN202U
D 2551	Diode	UDZS6R8(B)
D 2701	Diode	1SS355
D 2702	Diode Network	DA204U
D 2703	Diode Network	DA204U
D 2704	Diode	UDZS5R6(B)
D 2705	Diode Network	DA204U
D 2706	Diode Network	DA204U
D 2707	Diode Network	DA204U
D 2708	Diode Network	DA204U
D 2709	Diode Network	DA204U
D 2710	Diode Network	DA204U
D 2711	Diode Network	DA204U
D 2712	Diode	HZU8R2(B1)
D 2713	Diode	HZU5R6(B2)
D 2714	Diode	DAP202U
D 2715	Diode	DAP202U
D 2821	Diode	RB500V-40
L 1	Inductor	CTF1558
L 2	Inductor	CTF1558
L 3	Inductor	CTF1410
L 5	Inductor	CTF1556
L 6	Inductor	CTF1295
L 7	Inductor	CTF1558
L 8	Inductor	CTF1556
L 101	Inductor	CTF1557
L 102	Inductor	CTF1557
L 103	Inductor	CTF1557
L 104	Inductor	CTF1557
L 105	Inductor	CTF1557
L 106	Inductor	CTF1557
L 107	Inductor	CTF1557
L 108	Inductor	CTF1557
L 109	Inductor	CTF1557
L 110	Inductor	CTF1556
L 111	Inductor	CTF1556
L 112	Inductor	CTF1556
L 113	Inductor	CTF1557
L 114	Inductor	CTF1557
L 201	Inductor	CTF1556
L 203	Inductor	CTF1556
L 204	Inductor	CTF1488
L 205	Inductor	CTF1556
L 206	Inductor	CTF1556

Circuit Symbol and No.		Part No.
L 207	Inductor	CTF1379
L 301	Inductor	CTF1557
L 302	Inductor	CTF1557
L 305	Inductor	CTF1556
L 306	Inductor	CTF1556
L 307	Inductor	CTF1556
L 308	Inductor	CTF1334
L 312	Inductor	CTF1410
L 601	Inductor	CTF1334
L 602	Inductor	CTF1334
L 603	Inductor	CTF1334
L 604	Inductor	CTF1334
L 605	Inductor	CTF1334
L 606	Inductor	CTF1334
L 607	Inductor	CTF1334
L 610	Inductor	CTF1334
L 613	Inductor	CTF1334
L 616	Inductor	CTF1334
L 617	Inductor	CTF1334
L 619	Inductor	CTF1306
L 620	Inductor	CTF1306
L 621	Inductor	CTF1306
L 622	Inductor	CTF1384
L 623	Inductor	CTF1387
L 624	Inductor	CTF1334
L 625	Inductor	CTF1306
L 626	Inductor	CTF1306
L 627	Inductor	CTF1306
L 628	Inductor	CTF1306
L 629	Inductor	CTF1306
L 630	Inductor	CTF1306
L 631	Inductor	CTF1334
L 632	Inductor	CTF1334
L 633	Inductor	CTF1334
L 634	Inductor	CTF1334
L 635	Inductor	CTF1306
L 636	Inductor	CTF1334
L 637	Inductor	CTF1306
L 638	Inductor	CTF1306
L 639	Inductor	CTF1306
L 640	Inductor	CTF1306
L 641	Inductor	CTF1306
L 644	Inductor	CTF1306
L 645	Inductor	CTF1306
L 646	Inductor	CTF1334
L 647	Inductor	CTF1334
L 648	Inductor	CTF1378
L 649	Inductor	CTF1378
L 650	Inductor	CTF1378
L 651	Inductor	CTF1378
L 652	Inductor	CTF1334
L 653	Inductor	CTF1467
L 654	Inductor	CTF1306
L 660	Inductor	CTF1463
L 661	Inductor	CTF1386
L 662	Inductor	CTF1306
L 663	Inductor	CTF1306
L 665	Inductor	CTF1306
L 667	Inductor	CTF1467
L 668	Inductor	CTF1334

Circuit Symbol and No.		Part No.
L 669	Inductor	CTF1306
L 670	Inductor	CTF1306
L 671	Inductor	CTF1306
L 672	Inductor	CTF1306
L 673	Inductor	CTF1306
L 674	Inductor	CTF1306
L 675	Inductor	CTF1463
L 676	Inductor	CTF1463
L 677	Inductor	CTF1463
L 678	Inductor	CTF1463
L 679	Inductor	CTF1453
L 680	Inductor	CTF1463
L 681	Inductor	CTF1306
L 682	Inductor	CTF1357
L 683	Inductor	CTF1357
L 684	Inductor	CTF1357
L 685	Inductor	CTF1357
L 686	Inductor	CTF1306
L 687	Inductor	CTF1306
L 688	Inductor	CTF1357
L 689	Inductor	CTF1306
L 690	Inductor	CTF1334
L 691	Inductor	CTF1334
L 692	Inductor	CTF1306
L 693	Inductor	CTF1384
L 694	Inductor	CTF1306
L 695	Inductor	CTF1463
L 696	Inductor	CTF1306
L 697	Inductor	CTF1306
L 698	Inductor	CTF1629
L 699	Inductor	CTF1334
L 700	Inductor	CTF1306
L 701	Inductor	CTF1629
L 702	Inductor	LCYC2R2K1608
L 703	Inductor	CTF1306
L 704	Inductor	CTF1306
L 705	Inductor	CTF1306
L 706	Inductor	CTF1306
L 707	Inductor	CTF1306
L 708	Inductor	CTF1306
L 709	Inductor	CTF1306
L 710	Inductor	CTF1306
L 711	Inductor	CTF1306
L 712	Inductor	CTF1629
L 713	Inductor	CTF1306
L 714	Inductor	CTF1306
L 715	Inductor	CTF1306
L 716	Inductor	CTF1306
L 717	Inductor	CTF1306
L 718	Inductor	CTF1410
L 719	Inductor	CTF1334
L 721	Inductor	CTF1306
L 722	Inductor	CTF1306
L 723	Inductor	CTF1306
L 724	Inductor	CTF1306
L 725	Inductor	CTF1306
L 726	Inductor	CTF1306
L 727	Inductor	CTF1306
L 732	Inductor	CTF1295
L 733	Inductor	CTF1295

Circuit Symbol and No.		Part No.
L 734	Inductor	CTF1295
L 735	Inductor	CTF1295
L 736	Inductor	CTF1295
L 737	Inductor	CTF1295
L 738	Inductor	CTF1295
L 739	Inductor	CTF1295
L 740	Inductor	CTF1410
L 741	Inductor	CTF1295
L 742	Inductor	CTF1295
L 744	Inductor	CTF1334
L 745	Inductor	CTF1334
L 746	Inductor	CTF1334
L 748	Inductor	CTF1334
L 749	Inductor	CTF1334
L 751	Inductor	CTF1334
L 753	Inductor	LCTA680J3225
L 754	Inductor	CTF1334
L 755	Inductor	CTF1334
L 756	Inductor	CTF1306
L 757	Inductor	CTF1306
L 758	Inductor	CTF1306
L 759	Inductor	CTF1334
L 760	Inductor	CTF1334
L 761	Inductor	LCYC2R2K1608
L 762	Inductor	LCYC2R2K1608
L 763	Inductor	LCYC2R2K1608
L 764	Inductor	LCYC2R2K1608
L 765	Inductor	LCYC2R2K1608
L 766	Inductor	LCYC2R2K1608
L 767	Inductor	CTF1334
L 768	Inductor	CTF1334
L 771	Inductor	CTF1453
L 772	Inductor	CTF1453
L 793	Inductor	CTF1334
L 794	Inductor	CTF1306
L 795	Inductor	CTF1306
L 796	Inductor	CTF1306
L 801	Inductor	CTH1254
L 802	Inductor	CTH1257
L 803	Inductor	CTH1254
L 804	Inductor	CTH1255
L 805	Inductor	CTH1257
L 806	Inductor	CTH1257
L 807	Inductor	CTH1262
L 808	Inductor	CTH1253
L 809	Inductor	CTH1253
L 810	Choke Coil 100µH	CTH1315
L 811	Inductor	CTF1556
L 812	Inductor	CTF1453
L 815	Inductor	CTF1556
L 816	Inductor	CTF1306
L 817	Inductor	LCKBW1R0M2520
L 818	Inductor	LCKAW220J2520
L 981	Inductor	CTF1453
L 982	Inductor	CTF1463
L 983	Inductor	CTF1463
L 984	Inductor	CTF1463
L 985	Inductor	CTF1463
L 2402	Inductor	CTF1306
L 2404	Inductor	LCTA2R2J2520

Circuit Symbol and No.		Part No.
L 2551	Inductor	CTF1379
L 2554	Inductor	CTF1334
L 2555	Inductor	CTF1334
L 2601	Inductor	CTF1334
L 2701	Inductor	CTF1399
L 2702	Inductor	CTF1334
L 2703	Inductor	CTF1334
L 2704	Inductor	CTF1306
L 2705	Inductor	CTF1306
L 2706	Inductor	CTF1306
L 2707	Inductor	CTF1306
L 2708	Inductor	CTF1306
L 2709	Inductor	CTF1306
L 2710	Inductor	CTF1306
L 2711	Inductor	CTF1306
L 2712	Inductor	CTF1334
L 2713	Inductor	CTF1334
L 2714	Inductor	CTF1334
L 2715	Inductor(X1/EW)	CTF1334
L 2716	Inductor	CTF1334
L 2717	Inductor	CTF1306
L 2800	Inductor	CTF1305
TH601	Thermistor	CCX1056
X 1	Radiator 30.000MHz	CSS1633
X 2	Radiator 33.000MHz	CSS1634
X 3	Radiator 33.8688MHz	CSS1551
X 202	Radiator 14.31818MHz	CSS1632
X 601	Radiator 10.0MHz	CSS1577
VR751	Semi-fixed 1kΩ(OB)	CCP1390
FU691	Fuse 2.5A	CEK1285
FU801	Fuse 1.25A	CEK1255
FU802	Fuse 4A	CEK1288
FU803	Fuse 375mA	CEK1277
FU804	Fuse 2.5A	CEK1285
FU805	Fuse 2.5A	CEK1285
FU806	Fuse 1A	CEK1254
FU807	Fuse 1A	CEK1280
FU808	Fuse 4A	CEK1260
FU809	Fuse 2A	CEK1284
FU810	Fuse 500mA	CEK1278
FU811	Fuse 2A	CEK1284
FU812	Fuse 250mA	CEK1276
FU813	Fuse 2.5A	CEK1285
FU814	Fuse 250mA	CEK1276
FU815	Fuse 1A	CEK1280
FU971	Fuse 375mA	CEK1277
FU2701	Fuse 250mA	CEK1276
EF731	EMI Filter	CCG1082
EF732	EMI Filter	CCG1082
EF733	EMI Filter	CCG1067
EF734	EMI Filter	CCG1067
EF735	EMI Filter	CCG1067
EF736	EMI Filter	CCG1067
EF801	EMI Filter	CCG1172
EF802	EMI Filter	CCG1172
EF803	EMI Filter	CCG1172

RESISTORS

Circuit Symbol and No.	Part No.
R 1	RS1/16S0R0J
R 3	RS1/16S0R0J
R 5	RS1/16S473J
R 6	RS1/16S473J
R 7	RS1/16S220J
R 8	RS1/16S473J
R 10	RS1/16S104J
R 11	RAB4C473J
R 12	RS1/16S105J
R 13	RS1/16S151J
R 14	RS1/16S0R0J
R 16	RS1/16S0R0J
R 19	RS1/16S473J
R 20	RS1/16S101J
R 21	RS1/16S101J
R 22	RS1/16S101J
R 23	RS1/16S105J
R 24	RS1/16S151J
R 25	RS1/16S101J
R 26	RS1/16S101J
R 27	RS1/16S101J
R 28	RS1/16S101J
R 29	RS1/16S101J
R 30	RS1/16S101J
R 31	RS1/16S101J
R 32	RS1/16S473J
R 33	RS1/16S473J
R 34	RS1/16S105J
R 35	RS1/16S104J
R 36	RS1/16S101J
R 37	RS1/16S101J
R 38	RS1/16S101J
R 39	RS1/16S101J
R 40	RS1/16S470J
R 45	RS1/16S104J
R 46	RS1/16S104J
R 47	RS1/16S104J
R 48	RS1/16S104J
R 49	RS1/16S104J
R 50	RS1/16S104J
R 51	RS1/16SS101J
R 52	RS1/16SS101J
R 53	RS1/16SS101J
R 54	RS1/16SS101J
R 55	RS1/16SS101J
R 57	RS1/16SS101J
R 59	RS1/16SS101J
R 60	RS1/16SS101J
R 61	RS1/16SS0R0J
R 62	RS1/16SS101J
R 63	RS1/16SS101J
R 64	RS1/16SS101J
R 65	RS1/16SS101J
R 66	RS1/16SS101J
R 67	RS1/16SS101J
R 68	RS1/16SS101J
R 69	RS1/16SS101J
R 70	RS1/16SS101J
R 71	RS1/16SS101J
R 72	RS1/16SS101J
R 73	RS1/16SS101J

Circuit Symbol and No.	Part No.
R 74	RS1/16SS101J
R 75	RS1/16SS101J
R 76	RS1/16SS101J
R 77	RS1/16SS101J
R 78	RS1/16SS101J
R 79	RS1/16SS101J
R 80	RS1/16SS101J
R 81	RS1/16SS101J
R 82	RS1/16SS101J
R 84	RS1/16SS562J
R 85	RS1/16SS103J
R 87	RS1/16S104J
R 88	RS1/16S104J
R 89	RS1/16S0R0J
R 90	RS1/16S0R0J
R 93	RS1/16S153J
R 94	RS1/16S153J
R 95	RS1/16S153J
R 96	RS1/16S153J
R 97	RS1/16S473J
R 98	RS1/16S473J
R 101	RS1/16S473J
R 102	RS1/16S473J
R 103	RS1/16S473J
R 104	RS1/16S220J
R 151	RS1/16S0R0J
R 152	RS1/16S0R0J
R 153	RS1/16S471J
R 154	RS1/16S473J
R 155	RS1/16S473J
R 156	RS1/16S473J
R 157	RS1/16S473J
R 158	RS1/16S473J
R 159	RS1/16S473J
R 160	RS1/16S473J
R 161	RS1/16S103J
R 162	RS1/16S473J
R 163	RS1/16S560J
R 164	RS1/16S473J
R 165	RS1/16S473J
R 166	RS1/16S473J
R 167	RS1/16S473J
R 169	RS1/16S473J
R 170	RS1/16S473J
R 171	RS1/16S473J
R 172	RS1/16S473J
R 174	RS1/16S473J
R 175	RS1/16S473J
R 176	RS1/16S0R0J
R 177	RS1/16S473J
R 178	RS1/16S473J
R 179	RS1/16S473J
R 180	RS1/16S101J
R 181	RS1/16S473J
R 182	RS1/16S473J
R 183	RS1/16S473J
R 184	RS1/16S473J
R 185	RS1/16S473J
R 186	RS1/16S473J
R 187	RS1/16S473J

Circuit Symbol and No.	Part No.
R 188	RS1/16S473J
R 189	RS1/16S473J
R 190	RS1/16S473J
R 191	RS1/16S473J
R 192	RS1/16S473J
R 193	RS1/16S473J
R 194	RS1/16S390J
R 196	RS1/16S473J
R 201	RN1/16SE1502D
R 202	RN1/16SE1202D
R 210	RS1/16S104J
R 211	RS1/16S104J
R 212	RS1/16S104J
R 213	RS1/16S104J
R 217	RS1/16S272J
R 220	RS1/16S223J
R 221	RS1/16S105J
R 222	RS1/16S151J
R 224	RS1/16S0R0J
R 225	RS1/16S104J
R 226	RS1/16S104J
R 227	RS1/16S104J
R 228	RS1/16S104J
R 229	RS1/16S560J
R 230	RS1/16S104J
R 232	RS1/16S104J
R 237	RS1/16S104J
R 238	RS1/16S330J
R 240	RS1/16S104J
R 301	RS1/16S123J
R 302	RS1/16S103J
R 303	RS1/16S473J
R 320	RS1/16S103J
R 329	RS1/16SS821J
R 330	RS1/16SS221J
R 331	RS1/16SS221J
R 332	RS1/16SS472J
R 333	RS1/16SS222J
R 334	RS1/16SS222J
R 335	RS1/16SS221J
R 336	RS1/16SS221J
R 349	RS1/16S473J
R 350	RS1/16S473J
R 356	RS1/16S0R0J
R 360	RS1/16SS473J
R 361	RS1/16SS473J
R 362	RS1/16SS473J
R 363	RS1/16SS473J
R 364	RS1/16SS473J
R 365	RS1/16SS473J
R 366	RS1/16SS473J
R 367	RS1/16SS473J
R 368	RS1/16SS473J
R 369	RS1/16SS473J
R 370	RS1/8S0R0J
R 601	RS1/16S1803D
R 602	RS1/16SS473J
R 603	RS1/16SS473J
R 604	RS1/16SS0R0J
R 606	RAB4C681J

Circuit Symbol and No.		Part No.
R 607		RS1/16SS473J
R 608		RS1/16S563J
R 609		RS1/16S104J
R 610		RS1/16S473J
R 611		RS1/16S472J
R 614	(N1/UC)	RS1/16SS473J
R 615	(X1/EW)	RS1/16SS473J
R 616		RS1/16SS681J
R 617		RS1/16S0R0J
R 618		RS1/16SS473J
R 620		RS1/16SS473J
R 622		RS1/16SS473J
R 623		RAB4C681J
R 625		RS1/16S473J
R 626		RAB4C681J
R 627		RS1/16SS473J
R 628		RS1/16SS473J
R 629		RS1/16SS473J
R 631		RS1/16S681J
R 632		RS1/16SS473J
R 633		RS1/16SS473J
R 634		RS1/16S473J
R 636		RS1/16S473J
R 637		RS1/16S473J
R 640		RS1/16SS101J
R 641		RS1/16SS473J
R 642		RS1/16SS681J
R 643		RS1/16SS681J
R 644		RS1/16SS681J
R 645		RS1/16SS681J
R 646		RAB4C681J
R 648		RS1/16SS681J
R 649		RS1/16SS681J
R 650		RS1/16SS104J
R 651		RS1/16S681J
R 653		RS1/16S2003F
R 654		RS1/16SS473J
R 655		RS1/16SS681J
R 657		RS1/16S104J
R 658		RS1/16SS101J
R 659		RAB4C681J
R 660		RS1/16SS104J
R 661		RS1/16SS681J
R 662		RS1/16SS681J
R 663		RS1/16SS681J
R 664		RS1/16SS681J
R 665		RAB4C681J
R 666		RAB4C681J
R 667		RS1/16SS681J
R 668		RS1/16S104J
R 670		RS1/16SS103J
R 671		RS1/16SS103J
R 672		RS1/16SS681J
R 673		RS1/16SS102J
R 674		RS1/16SS102J
R 675		RS1/16SS681J
R 676		RS1/16SS681J
R 687		RS1/16S470J
R 691		RS1/16S471J
R 692		RS1/16S471J

Circuit Symbol and No.	Part No.
R 693	RS1/16S681J
R 694	RS1/16S681J
R 695	RS1/16S681J
R 696	RS1/16S681J
R 697	RS1/16S681J
R 711	RS1/16S102J
R 712	RS1/16S472J
R 715	RS1/16S472J
R 716	RS1/16S153J
R 730	RS1/16S0R0J
R 732	RS1/16S102J
R 733	RS1/16S102J
R 734	RS1/16S102J
R 735	RS1/16S102J
R 736	RS1/16S0R0J
R 737	RS1/16S102J
R 738	RS1/16S681J
R 739	RS1/16S681J
R 751	RS1/16SS101J
R 752	RS1/16SS101J
R 753	RS1/16SS101J
R 754	RS1/16S222J
R 755	RS1/16S222J
R 756	RS1/16S103J
R 757	RS1/16S272J
R 758	RS1/16S272J
R 759	RS1/16S0R0J
R 760	RS1/16S301J
R 761	RS1/16S1000D
R 762	RN1/16SE2002D
R 763	RS1/16S473J
R 764	RS1/16S75R0D
R 765	RS1/16S75R0D
R 766	RS1/16S75R0D
R 767	RS1/16S750J
R 768	RS1/16S62R0D
R 769	RS1/16S105J
R 770	RS1/16S101J
R 772	RS1/16S105J
R 773	RS1/16S750J
R 774	RS1/16S101J
R 776	RS1/16S750J
R 777	RS1/16S750J
R 778	RS1/16S681J
R 779	RS1/16S302J
R 780	RS1/16S102J
R 781	RS1/16S0R0J
R 782	RS1/16S105J
R 783	RS1/16S105J
R 784	RS1/16S105J
R 785	RS1/16S105J
R 794	RS1/16S563J
R 795	RS1/16SS102J
R 796	RS1/16S563J
R 805	RS1/16S151J
R 806	RS1/16S151J
R 807	RS1/16S470J
R 808	RS1/16S103J
R 810	RS1/16S0R0J
R 812	RS1/16S470J

Circuit Symbol and No.	Part No.
R 813	RS1/16S0R0J
R 814	RS1/16S0R0J
R 817	RS1/16S103J
R 819	RS1/8S181J
R 820	RS1/8S181J
R 821	RS1/16S103J
R 824	RS1/16S0R0J
R 825	RS1/10S360J
R 826	RS1/10S360J
R 827	RS1/16S103J
R 829	RS1/16S475J
R 830	RS1/16S101J
R 831	RS1/16S1600D
R 832	RS1/16S5601D
R 833	RS1/16S1001D
R 834	RS1/16S331J
R 835	RS1/16S154J
R 836	RS1/16S3300D
R 837	RS1/16S101J
R 838	RS1/16S3001D
R 839	RS1/16S1001D
R 840	RS1/16S102J
R 841	RS1/16S104J
R 842	RS1/16S6800D
R 843	RS1/16S5601D
R 844	RS1/16S1001D
R 845	RS1/16S101J
R 846	RS1/16S102J
R 847	RS1/16S5600D
R 848	RS1/16S2401D
R 849	RS1/16S101J
R 850	RS1/16S1601D
R 851	RS1/16S152J
R 852	RS1/16S1200D
R 853	RS1/16S1001D
R 854	RS1/16S104J
R 855	RS1/16S101J
R 856	RS1/16S1001D
R 857	RS1/16S152J
R 858	RS1/16S100J
R 859	RS1/16S184J
R 861	RS1/10S100J
R 865	RS1/16S100J
R 866	RS1/16S104J
R 867	RS1/16S473J
R 868	RS1/16S100J
R 869	RS1/16S104J
R 870	RS1/16S473J
R 873	RS1/10S150J
R 874	RS1/16S224J
R 875	RS1/16S224J
R 876	RS1/10S150J
R 877	RS1/10S150J
R 878	RS1/16S224J
R 879	RS1/16S224J
R 880	RS1/10S150J
R 884	RS1/4S561J
R 885	RS1/4S561J
R 886	RS1/16S103J
R 891	RS1/16S1101D

Circuit Symbol and No.	Part No.
R 892	RS1/16S6800D
R 893	RS1/8S102J
R 894	RS1/16S471J
R 895	RS1/8S102J
R 896	RS1/16S103J
R 901	RS1/16S224J
R 902	RS1/16S473J
R 903	RS1/16S223J
R 904	RS1/16S223J
R 905	RS1/10S472J
R 906	RS1/16S223J
R 911	RS1/16S474J
R 912	RS1/16S472J
R 913	RS1/16S102J
R 914	RS1/16S473J
R 915	RS1/16S473J
R 916	RS1/16S473J
R 917	RS1/16S0R0J
R 918	RS1/16S471J
R 919	RS1/16S475J
R 920	RS1/16S101J
R 921	RS1/16S103J
R 922	RS1/16S0R0J
R 925	RS1/16S102J
R 926	RS1/16S103J
R 927	RS1/16S471J
R 928	RS1/16S103J
R 929	RS1/10S103J
R 936	RS1/16S820J
R 937	RS1/16S820J
R 938	RS1/16S561J
R 939	RS1/16S0R0J
R 940	RS1/16S0R0J
R 941	RS1/16S0R0J
R 942	RS1/16S0R0J
R 943	RS1/16S0R0J
R 944	RS1/16S104J
R 945	RS1/16S104J
R 946	RS1/16S4701D
R 952	RS1/16S473J
R 954	RS1/16S103J
R 962	RS1/16S103J
R 971	RS1/16S824J
R 972	RS1/16S102J
R 973	RS1/16S472J
R 974	RS1/8S271J
R 975	RS1/8S751J
R 977	RS1/16S103J
R 978	RS1/16S103J
R 979	RS1/10S0R0J
R 981	RS1/10S0R0J
R 982	RS1/10S0R0J
R 983	RS1/10S102J
R 2403	RS1/16S102J
R 2404	RS1/16S473J
R 2407	RS1/16SS473J
R 2409	RS1/16S473J
R 2410	RS1/16SS473J
R 2411	RS1/16S473J
R 2416	RS1/16SS473J

Circuit Symbol and No.	Part No.
R 2417	RS1/16S104J
R 2418	RS1/16S102J
R 2419	RS1/16SS473J
R 2420	RS1/16S473J
R 2421	RS1/16S473J
R 2422	RS1/16S473J
R 2423	RS1/16SS473J
R 2424	RS1/16S473J
R 2425	RS1/16S473J
R 2426	RS1/16SS473J
R 2428	RS1/16S0R0J
R 2432	RS1/16S473J
R 2433	RS1/16S473J
R 2438	RS1/16S181J
R 2439	RS1/16S331J
R 2440	RS1/16S181J
R 2441	RS1/16S223J
R 2444	RS1/16S223J
R 2445	RS1/16S102J
R 2446	RS1/16S102J
R 2447	RS1/16S104J
R 2448	RS1/16S473J
R 2449	RS1/16S101J
R 2450	RS1/16S473J
R 2451	RS1/16S152J
R 2452	RS1/16S101J
R 2459	RS1/16S0R0J
R 2460	RS1/16S104J
R 2461	RS1/16S1202D
R 2462	RS1/16S1003D
R 2463	RS1/16S0R0J
R 2464	RS1/16S0R0J
R 2465	RS1/16SS0R0J
R 2470	RS1/16S0R0J
R 2471	RS1/16S0R0J
R 2472	RS1/16S331J
R 2473	RS1/16S331J
R 2474	RS1/16S101J
R 2475	RS1/16S104J
R 2476	RS1/16S104J
R 2478	RS1/16S472J
R 2479	RS1/16S472J
R 2480	RS1/16S472J
R 2481	RS1/16S472J
R 2482	RS1/16S472J
R 2483	RS1/16S472J
R 2484	RS1/16S472J
R 2485	RS1/16S472J
R 2486	RS1/16S472J
R 2487	RS1/16S472J
R 2488	RS1/16S471J
R 2489	RS1/16S471J
R 2492	RS1/16S223J
R 2493	RS1/16S473J
R 2496	RS1/16S103J
R 2497	RS1/4S102J
R 2499	RS1/16S103J
R 2500	RS1/16S103J
R 2501	RS1/16S221J
R 2502	RS1/16S102J

Circuit Symbol and No.		Part No.
R 2503		RS1/16S101J
R 2551		RS1/16SS101J
R 2552		RS1/16SS621J
R 2553		RS1/16SS473J
R 2555		RS1/16SS361J
R 2556		RS1/16S473J
R 2557		RS1/16S473J
R 2558		RS1/16SS473J
R 2566		RS1/16SS101J
R 2567		RS1/16SS101J
R 2568		RS1/16SS101J
R 2569		RS1/16S102J
R 2570		RS1/16S0R0J
R 2571		RS1/16S224J
R 2572		RS1/16S224J
R 2602		RS1/8S0R0J
R 2603		RS1/16S102J
R 2604		RS1/16S102J
R 2606		RS1/16S683J
R 2608		RS1/16S153J
R 2610		RS1/16S0R0J
R 2612		RS1/16S752J
R 2613		RS1/16S683J
R 2615		RS1/16S394J
R 2616		RS1/16S101J
R 2617		RS1/16S105J
R 2618		RS1/16S102J
R 2619		RS1/16S472J
R 2620		RS1/16S152J
R 2621		RS1/16S472J
R 2622		RS1/16S472J
R 2623		RS1/16S472J
R 2624		RS1/16S333J
R 2625		RS1/16S683J
R 2626		RS1/16S154J
R 2627		RS1/16S101J
R 2628		RS1/16S103J
R 2629		RS1/16S103J
R 2630		RS1/16S473J
R 2631		RS1/16S473J
R 2701		RS1/16S222J
R 2702		RS1/16S222J
R 2706		RS1/16S222J
R 2707		RS1/16S102J
R 2708		RS1/16S102J
R 2710		RS1/16S102J
R 2711		RS1/16S102J
R 2712		RS1/16S103J
R 2715		RS1/16S223J
R 2716		RS1/16S223J
R 2717		RS1/16S472J
R 2718		RS1/16S103J
R 2719		RS1/16S223J
R 2720		RS1/16S472J
R 2721		RS1/16S223J
R 2722		RS1/16S472J
R 2723	(X1/EW)	RS1/16S223J
R 2724	(X1/EW)	RS1/16S472J
R 2725	(X1/EW)	RS1/16S103J
R 2726	(X1/EW)	RS1/16S223J

Circuit Symbol and No.		Part No.
R 2727	(N1/UC)	RS1/16S0R0J
R 2729	(X1/EW)	RS1/16S472J
R 2730		RS1/16S471J
R 2731		RS1/16S471J
R 2732		RS1/16S332J
R 2733		RS1/16S332J
R 7021		RS1/16S820J
R 7037		RS1/16S101J
R 7038		RS1/16S101J
R 7039		RS1/16S750J
R 7042		RS1/16S4701D
R 7043		RS1/16S4701D
R 7044		RS1/16S101J
R 7045		RS1/16S102J
R 7046		RS1/16S4701D
R 7047		RS1/16S4701D
R 7048		RS1/16S563J
R 7049		RS1/16S473J

CAPACITORS

Circuit Symbol and No.		Part No.
C 1		CKSRYB104K16
C 2		CKSRYB104K16
C 3		CKSRYB104K16
C 4		CKSRYB104K16
C 5		CKSRYB104K16
C 6		CKSRYB104K16
C 7		CKSRYB104K16
C 8		CKSRYB104K16
C 9		CKSRYB104K16
C 10		CKSRYB104K16
C 11		CKSRYB104K16
C 12	10µF	CCG1171
C 13		CKSRYB104K16
C 14		CKSRYB104K16
C 15		CKSRYB104K16
C 16		CKSRYB104K16
C 17		CKSRYB104K16
C 18		CCSRCH100D50
C 19		CCSRCH100D50
C 20		CKSRYB104K16
C 21		CKSRYB104K16
C 22		CKSRYB104K16
C 23		CKSRYB104K16
C 24		CKSRYB104K16
C 25		CKSRYB104K16
C 26		CKSRYB104K16
C 27	10µF	CCG1171
C 28		CKSRYB104K16
C 29		CKSRYB104K16
C 30		CKSRYF104Z25
C 31		CCSRCH9R0D50
C 32		CCSRCH9R0D50
C 33		CKSRYB104K16
C 35		CKSRYB104K16
C 36		CKSRYB104K16
C 38	10µF	CCG1171
C 39		CKSRYB104K16
C 40		CKSRYB104K16
C 41		CKSRYB104K16
C 42		CKSRYB104K16

Circuit Symbol and No.		Part No.
C 44		CKSRYB104K16
C 47		CKSRYB104K16
C 49		CKSRYB104K16
C 51		CKSRYB224K10
C 54		CCSRCH121J50
C 55		CKSRYB104K16
C 57		CKSRYB104K16
C 60		CKSRYB104K16
C 63		CKSRYB104K16
C 64		CKSRYB104K16
C 66		CKSRYB104K16
C 67	10µF	CCG1171
C 68	22µF	CCG1178
C 69	22µF	CCG1178
C 70	22µF	CCG1178
C 71		CKSRYF103Z50
C 72		CKSRYF103Z50
C 73		CKSRYF104Z25
C 74		CKSRYF104Z25
C 75		CKSRYF104Z25
C 76		CKSRYB103K50
C 77		CKSRYB103K50
C 78		CKSRYB103K50
C 79		CKSRYB103K50
C 80		CKSRYB103K50
C 81		CKSRYB224K10
C 82		CKSRYB103K50
C 96		CKSRYB224K10
C 97		CKSRYB224K10
C 98		CKSRYB224K10
C 101		CKSRYB104K16
C 102		CKSRYB104K16
C 103		CKSRYB104K16
C 104		CKSRYB104K16
C 105		CKSRYB104K16
C 106		CKSRYB104K16
C 107		CKSRYB104K16
C 108		CKSRYB104K16
C 109		CKSRYB104K16
C 110	10µF	CCG1171
C 111		CKSRYB104K16
C 112		CKSRYF224Z16
C 113	10µF	CCG1171
C 114		CKSRYB104K16
C 115		CKSRYF224Z16
C 116		CKSRYF104Z25
C 117	10µF	CCG1171
C 118		CKSRYB104K16
C 119		CKSRYF104Z25
C 120		CKSRYF104Z25
C 121		CKSRYF104Z25
C 122		CKSRYF104Z25
C 123		CKSRYF103Z50
C 124		CCSRCH101J50
C 125		CKSRYF104Z25
C 126		CKSRYF104Z25
C 201		CKSRYB104K16
C 202		CKSRYB104K16
C 203		CKSRYB104K16
C 204		CKSRYB104K16

Circuit Symbol and No.		Part No.
C 205		CKSRYB104K16
C 206		CKSRYB104K16
C 207		CKSRYB104K16
C 208		CKSRYB104K16
C 209		CKSRYB104K16
C 211		CKSRYB104K16
C 213		CKSRYB104K16
C 214		CKSRYB104K16
C 215		CKSRYB104K16
C 216		CKSRYB104K16
C 217		CKSRYB104K16
C 220	10µF	CCG1171
C 221		CKSRYB104K16
C 222		CKSRYB104K16
C 223		CKSRYB224K10
C 224		CKSRYB104K16
C 225		CKSRYB104K16
C 227		CKSRYB104K16
C 228		CKSRYB104K16
C 230		CCSRCH150J50
C 231		CCSRCH120J50
C 232		CKSRYB104K16
C 233		CKSRYB104K16
C 234		CKSRYB104K16
C 235		CKSRYB104K16
C 237		CKSRYB104K16
C 238		CKSRYB104K16
C 239		CKSRYB104K16
C 240		CKSRYB104K16
C 241		CKSRYB104K16
C 242		CKSRYB104K16
C 243		CKSRYB104K16
C 244		CKSRYB104K16
C 245		CKSRYB104K16
C 246		CKSRYB104K16
C 247		CKSRYB104K16
C 248		CKSRYB104K16
C 249	10µF	CCG1171
C 250	10µF	CCG1171
C 251	10µF	CCG1171
C 252	10µF	CCG1171
C 253		CKSRYF104Z25
C 255		CKSRYB103K50
C 256		CKSRYB103K50
C 257		CKSRYB103K50
C 258		CKSRYB103K50
C 259		CKSRYB103K50
C 260		CKSRYB103K50
C 261		CKSRYB103K50
C 262		CKSRYB103K50
C 301		CKSRYF104Z25
C 302		CKSRYB334K10
C 303		CKSRYF104Z25
C 306		CKSRYF104Z25
C 323	10µF	CCG1171
C 324		CKSRYB104K16
C 327	10µF	CCG1171
C 328		CKSRYB104K16
C 329	10µF	CCG1171
C 330	10µF	CCG1171

Circuit Symbol and No.		Part No.
C 331		CKSRYB104K16
C 332		CKSRYB104K16
C 339	10µF	CCG1171
C 341		CCSRCH101J50
C 342		CKSRYF104Z25
C 344		CKSRYF103Z50
C 345		CKSRYF104Z25
C 346		CKSRYF103Z50
C 347		CKSRYF103Z50
C 348		CKSRYF104Z25
C 349		CKSRYF103Z50
C 350		CKSRYB104K16
C 601		CKSSYB104K10
C 602		CKSSYB104K10
C 603		CKSSYB104K10
C 604		CKSSYB104K10
C 605		CKSSYB104K10
C 606		CKSRYB104K16
C 607		CKSSYB104K10
C 608		CKSSYB104K10
C 609		CKSRYB104K16
C 610		CKSSYB104K10
C 611		CKSSYB104K10
C 612		CKSSYB104K10
C 617		CKSQYB225K10
C 620		CKSRYF104Z25
C 623		CKSSYB104K10
C 624		CKSRYF104Z25
C 626		CKSSYB103K16
C 630		CCSRCH101J50
C 636		CKSRYF104Z25
C 637		CKSRYF104Z25
C 638		CKSRYF104Z25
C 639		CKSRYF104Z25
C 640		CKSRYF104Z25
C 642		CKSRYF104Z25
C 643		CKSRYF104Z25
C 644		CKSRYF104Z25
C 645	10µF	CCG1173
C 647	10µF	CCG1173
C 648		CKSRYF104Z25
C 670		CKSSYB104K10
C 671		CKSSYB104K10
C 672		CKSSYB104K10
C 673		CKSSYB104K10
C 675		CKSSYB104K10
C 691		CKSRYB102K50
C 692		CKSRYB104K16
C 693		CKSQYB105K16
C 694		CKSQYB105K16
C 695		CKSQYB105K16
C 696		CKSRYB102K50
C 697		CKSQYB105K16
C 698		CKSQYB105K16
C 699		CKSRYB102K50
C 700		CKSRYB102K50
C 701		CKSRYB102K50
C 702		CKSRYB102K50
C 706		CKSRYB104K25
C 732		CKSRYB102K50

Circuit Symbol and No.		Part No.
C 733		CKSRYB102K50
C 734		CKSRYB102K50
C 735		CKSRYB102K50
C 736		CKSRYF104Z25
C 737		CKSRYF104Z25
C 738		CKSRYF104Z25
C 739		CKSRYF104Z25
C 740		CKSRYF104Z25
C 741		CKSRYF104Z25
C 748		CKSSYB103K16
C 749		CKSQYB225K10
C 751		CKSRYB104K16
C 752		CKSRYB104K16
C 753		CKSRYB104K16
C 754		CCSRCH5R0C50
C 755		CCSRCH470J50
C 756		CKSRYF104Z25
C 757		CEVQ470M16
C 758		CKSRYB105K6R3
C 761		CCSRCH220J50
C 762		CEVW100M16
C 763		CKSRYF104Z25
C 764		CEVW221M4
C 765		CEVW221M4
C 766		CEVW221M4
C 767	330µF/6.3V	CCH1410
C 768		CKSRYB105K6R3
C 769		CEVQ470M16
C 770		CKSRYB104K16
C 771		CKSRYB104K16
C 772		CEVW101M16
C 773		CKSQYB225K10
C 774		CKSQYB225K10
C 775		CKSRYB103K50
C 776		CKSQYB225K10
C 777		CEVW101M16
C 778		CEVW220M6R3
C 779		CKSYF106Z10
C 780		CKSQYB225K10
C 781		CKSQYB225K10
C 782		CKSRYB104K16
C 783		CEVW101M16
C 784		CKSRYB103K50
C 785		CKSQYB225K10
C 786		CEVW101M16
C 787		CEVW220M6R3
C 788		CKSRYB104K16
C 790		CKSRYB104K16
C 791		CKSYF106Z10
C 792		CKSRYB104K16
C 793		CKSYF106Z10
C 794		CKSYF106Z10
C 795		CKSQYB225K10
C 796		CKSQYB225K10
C 797	10µF	CCG1171
C 798		CKSRYB104K16
C 799		CKSRYB104K16
C 800		CKSRYB104K16
C 801		CKSRYB103K50
C 802		CEVW101M16

Circuit Symbol and No.		Part No.
C 803		CKSQYB225K10
C 804		CEVW101M16
C 805		CKSRYB103K50
C 806		CKSRYB103K50
C 807		CEVW470M16
C 808		CKSRYF334Z16
C 809		CKSRYB103K50
C 810		CEVW101M16
C 811		CKSRYF104Z25
C 812		CKSRYB103K50
C 813		CEVW101M16
C 814		CEVW101M16
C 815		CKSRYB103K50
C 816		CEVW101M16
C 817		CKSRYB473K50
C 818		CKSRYB103K50
C 819		CCSRCH101J50
C 820		CKSRYB224K16
C 821		CKSRYB473K50
C 822		CCSRCH101J50
C 823		CKSRYB104K16
C 824		CKSRYB223K50
C 825		CCSRCH101J50
C 826		CKSRYB104K16
C 827		CKSRYB153K50
C 828		CCSRCH101J50
C 829		CKSRYB104K16
C 830		CKSRYB153K50
C 831		CCSRCH101J50
C 832		CKSRYB104K25
C 833		CCSRCH330J50
C 834		CKSRYB105K10
C 835	4.7µF	CCG1111
C 836		CKSRYF104Z25
C 837		CKSYB475K16
C 838		CKSRYF474Z16
C 839	220µF/10V	CCH1409
C 840	10µF	CCG1173
C 841	4.7µF	CCG1111
C 842		CKSRYB103K50
C 843		CCSRCH470J50
C 844		CKSRYB105K10
C 845		CKSRYB103K50
C 846	4.7µF	CCG1111
C 847		CKSRYB103K50
C 848		CCSRCH470J50
C 849		CKSRYB105K10
C 850		CKSRYB103K50
C 851	10µF	CCG1173
C 852	4.7µF	CCG1111
C 853		CKSRYF474Z16
C 854		CKSRYF104Z25
C 855		CKSRYF104Z25
C 856		CKSRYF474Z16
C 857		CKSYB475K16
C 858		CKSRYF474Z16
C 859		CKSRYF104Z25
C 860		CKSRYF104Z25
C 861		CKSRYF474Z16
C 862		CKSYB475K16

Circuit Symbol and No.		Part No.
C 863		CKSRYF104Z25
C 865	10µF	CCG1173
C 868	4.7µF	CCG1111
C 869	330µF/6.3V	CCH1366
C 870	4.7µF	CCG1111
C 871	220µF/10V	CCH1409
C 872	10µF	CCG1173
C 873	10µF	CCG1173
C 875	4.7µF	CCG1111
C 876	330µF/6.3V	CCH1366
C 877	4.7µF	CCG1111
C 878	330µF/6.3V	CCH1366
C 879	220µF/25V	CCH1356
C 880		CKSQYB104K16
C 881	2200µF/16V	CCH1405
C 882		CEVW101M16
C 883		CKSRYB103K50
C 884		CEVW101M16
C 885		CKSRYF104Z25
C 887		CKSRYF104Z25
C 888		CKSRYB103K50
C 889		CKSRYB103K50
C 890		CKSRYF104Z25
C 891		CKSRYF104Z25
C 892		CKSRYB103K50
C 893		CEVW101M16
C 894		CKSRYB103K50
C 895		CKSRYB104K16
C 896		CKSRYB103K50
C 897		CEVW101M16
C 898		CKSQYB104K16
C 899	220µF/25V	CCH1356
C 900		CKSQYB104K16
C 901		CKSRYB103K50
C 902		CEVW101M16
C 903	10000µF/16V	CCH1412
C 905		CEVW101M16
C 906		CKSRYB104K16
C 907		CKSRYB473K50
C 908		CKSRYF103Z50
C 909		CKSRYF104Z25
C 910		CKSRYB104K25
C 914		CKSRYF104Z25
C 916		CKSQYB104K25
C 918		CKSRYB103K50
C 919		CKSRYB104K25
C 920		CKSRYF104Z25
C 950	4.7µF	CCG1111
C 951	4.7µF	CCG1111
C 953	4.7µF	CCG1111
C 954	10µF	CCG1173
C 955	4.7µF	CCG1111
C 956	10µF	CCG1173
C 957	10µF	CCG1173
C 958	4.7µF	CCG1111
C 959	10µF	CCG1173
C 960	4.7µF	CCG1111
C 961		CKSRYF104Z25
C 962		CKSRYB103K50
C 963		CKSRYB104K25

Circuit Symbol and No.		Part No.
C 964		CKSRYB105K10
C 971		CKSRYB222K50
C 972		CKSRYB474K10
C 973		CKSQYB105K16
C 974		CKSQYB103K50
C 975		CEVQ470M16
C 981		CKSRYB103K50
C 982		CKSRYF104Z25
C 983		CKSRYB103K50
C 984		CKSRYF104Z25
C 985		CKSRYB103K50
C 986		CKSRYF104Z25
C 987		CKSRYB103K50
C 988		CKSRYF104Z25
C 989		CKSRYB103K50
C 990		CKSRYF104Z25
C 2019		CKSRYB104K16
C 2404		CKSRYB104K16
C 2407		CKSRYB104K16
C 2412		CEVW101M16
C 2413		CKSRYB105K10
C 2414		CKSRYB105K10
C 2418		CKSRYB105K6R3
C 2419		CCSRCH330J50
C 2420		CCSRCH330J50
C 2421		CKSRYB103K50
C 2422		CCSRCH151J50
C 2423		CCSRCH151J50
C 2424		CCSRCH221J50
C 2425		CCSRCH330J50
C 2426		CCSRCH330J50
C 2431		CCSRCH471J50
C 2432		CKSRYF104Z25
C 2433		CEVQ220M16
C 2434		CKSRYB105K6R3
C 2435		CKSRYB105K6R3
C 2436		CKSRYB105K6R3
C 2437		CKSRYB102K50
C 2441		CKSRYB105K6R3
C 2442		CKSRYB105K6R3
C 2443		CKSRYB105K6R3
C 2444		CKSRYB105K6R3
C 2445	47µF/16V	CCH1413
C 2446		CKSRYB105K6R3
C 2447		CKSRYB104K16
C 2448		CKSRYB105K6R3
C 2449		CKSRYB105K6R3
C 2450		CEVQ220M16
C 2451		CKSRYF104Z25
C 2452		CKSRYB105K6R3
C 2453		CKSYB475K16
C 2456		CKSYB475K16
C 2457		CKSYB475K16
C 2458		CKSYB475K16
C 2459		CKSYB475K16
C 2460		CKSYB475K16
C 2461		CKSRYB332K50
C 2462		CKSYB475K16
C 2463		CKSYB475K16
C 2464		CKSRYB474K10

Circuit Symbol and No.		Part No.
C 2465		CKSRYB104K16
C 2466		CKSRYB104K16
C 2467		CKSRYB104K16
C 2468		CCSRCH100D50
C 2469		CKSRYB104K16
C 2470		CCSRCH100D50
C 2471		CKSRYB104K16
C 2472		CCSRCH100D50
C 2473		CKSRYB104K16
C 2474		CCSRCH100D50
C 2475		CCSRCH100D50
C 2476		CCSRCH100D50
C 2477		CKSRYB105K6R3
C 2478		CKSRYB105K6R3
C 2479		CEVW101M16
C 2480	10µF/16V	CCH1442
C 2481		CEVW101M16
C 2482		CKSRYB222K50
C 2483	10µF	CCG1138
C 2484		CKSRYB105K6R3
C 2485	10µF	CCG1138
C 2486		CKSRYB105K6R3
C 2487		CCSRCH101J50
C 2488		CCSRCH101J50
C 2489		CKSRYB104K16
C 2490		CCSRCH101J50
C 2491		CCSRCH101J50
C 2492		CKSRYB104K16
C 2493	10µF/16V	CCH1442
C 2494		CKSRYB105K10
C 2495		CKSRYB105K10
C 2496		CKSRYB105K10
C 2497		CKSRYB105K10
C 2498		CKSRYB105K10
C 2499		CKSRYB105K10
C 2500		CKSRYB105K10
C 2501		CKSRYB105K10
C 2503	2200µF/16V	CCH1405
C 2504	10µF	CCG1138
C 2505		CKSRYB104K25
C 2506	10µF/16V	CCH1442
C 2507		CKSYB475K16
C 2508		CKSYB475K16
C 2509	33µF/25V	CCH1444
C 2510		CKSRYB473K50
C 2519		CKSRYF104Z25
C 2552		CCSRCH150J50
C 2553		CKSRYB104K16
C 2554		CKSQYB225K10
C 2555		CKSSYB104K10
C 2556		CKSSYB104K10
C 2557		CKSSYB103K16
C 2558		CKSRYB103K50
C 2603		CEVQ220M16
C 2604		CKSRYB473K50
C 2605		CKSRYB473K50
C 2606		CKSRYB333K50
C 2607		CKSRYB105K6R3
C 2608		CCSRCH471J50
C 2609		CKSRYF104Z25

Circuit Symbol and No.		Part No.
C 2610		CEVQ220M16
C 2611		CKSRYB105K6R3
C 2612		CKSRYB474K10
C 2613		CCSRCH471J50
C 2614		CCSRCH680J50
C 2615		CKSRYB105K6R3
C 2616		CKSRYB105K6R3
C 2617		CKSRYB104K16
C 2618		CKSRYF104Z25
C 2621		CKSSYF104Z16
C 2637		CKSQYB105K10
C 2704		CKSRYB104K16
C 2705		CKSRYB103K50
C 2706		CKSRYB104K16
C 2707		CKSRYF104Z25
C 2708		CKSRYB104K16
C 2709		CKSRYB104K16
C 2710	(X1/EW)	CKSRYB104K16
C 2711		CKSRYF104Z25
C 2712		CKSRYB102K50
C 2713	(X1/EW)	CKSRYB104K16
C 7007		CKSRYF104Z25
C 7014		CKSYB106K6R3
C 7015		CKSYB106K6R3
C 7017		CCSRCK1R0C50
C 7018		CKSRYB105K10
C 7019		CKSYF106Z10
C 7020		CKSRYB104K16
C 7021		CCSRCH102J50
C 7078		CKSRYB104K16
C 7092		CKSRYB104K16

P

Unit Number:CWX2929(AVIC-X1/EW)
Unit Number:CWX2960(AVIC-N1/UC)
Unit Name:GPS Unit

MISCELLANEOUS

IC 401	IC	UPC2749T
IC 402	IC	UPB1027GS
IC 441	IC	NJM2100V
IC 461	IC	ADC12H034CIMSA
IC 501	IC	PD3390A
IC 502	IC(X1/EW)	PD6472A
	IC(N1/UC)	PD6473A
IC 503	IC	M5M5V216ATP-70HI
IC 504	IC	MAX6364PUT29
IC 532	IC(X1/EW)	LC72720YVS
Q 441	Transistor	2SB1132
D 401	Diode	1SV314
D 501	Diode	RB751V40
L 401	Inductor	CTF1549
L 402	Inductor	CTF1486
L 403	Inductor	CTF1486
L 404	Inductor	LCSA3N3R1608
L 405	Inductor	LCYB22NJ1608
L 406	Inductor	LCYB22NJ1608
L 407	Inductor	CTF1410

Circuit Symbol and No.		Part No.
L 408	Inductor(X1/EW)	CTF1410
	Inductor(N1/UC)	CTF1556
L 409	Inductor	LCTB1R0K2125
L 410	Inductor	CTF1547
L 412	Inductor	CTF1547
L 413	Inductor	CTF1547
L 414	Inductor	CTF1547
L 415	Inductor	CTF1547
L 416	Inductor	CTF1547
L 417	Inductor	CTF1547
L 418	Inductor	CTF1410
L 441	Inductor	CTF1410
L 442	Inductor	CTF1410
L 461	Inductor	CTF1410
L 462	Inductor	CTF1410
L 467	Inductor	CTF1547
L 468	Inductor	CTF1547
L 469	Inductor	CTF1410
L 501	Inductor	CTF1410
L 502	Inductor	CTF1410
L 503	Inductor	CTF1410
L 504	Inductor	CTF1410
L 531	Inductor	CTF1410
X 401	TCXO 16.368MHz	CWX2381
X 501	Radiator 32.768kHz	CSS1319
X 502	Radiator 20.00MHz	CSS1549
X 532	Radiator 4.332MHz(X1/EW)	CSS1550
F 401	Filter	CTF1548

RESISTORS

R 401		RS1/16SS472J
R 402		RS1/16SS472J
R 403		RS1/16SS122J
R 404		RS1/16SS622J
R 405		RS1/16SS100J
R 406		RS1/16S271J
R 407		RS1/16S2R2J
R 441		RN1/16SC10R0D
R 442		RN1/16SE1501D
R 443		RN1/16SE2402D
R 444		RN1/16SE3302D
R 445		RN1/16SE4702D
R 446		RN1/16SE4702D
R 447		RS1/16S432J
R 448		RN1/16SE1002D
R 449		RN1/16SE2202D
R 450		RN1/16SE3302D
R 451		RS1/16S103J
R 452		RS1/16SS102J
R 454		RS1/16SS102J
R 460		RS1/16S0R0J
R 461		RS1/16SS102J
R 462		RS1/16SS102J
R 463		RAB4CQ102J
R 464		RAB4CQ333J
R 465		RS1/16SS102J
R 468	(X1/EW)	RS1/16SS471J
R 469	(X1/EW)	RAB4CQ471J
R 470		RAB4CQ471J

Circuit Symbol and No.		Part No.
R 471		RAB4CQ104J
R 477		RS1/16SS222J
R 478		RS1/16SS222J
R 479		RS1/16SS222J
R 480		RS1/16SS332J
R 481		RS1/16SS332J
R 482		RS1/16SS223J
R 483		RS1/16SS473J
R 501		RS1/16SS0R0J
R 502		RS1/16SS102J
R 503		RS1/16SS154J
R 508	(X1/EW)	RS1/16SS472J
	(N1/UC)	RS1/16SS103J
R 509		RS1/16SS473J
R 510		RS1/16SS102J
R 511		RS1/16SS103J
R 512		RS1/16SS473J
R 513		RS1/16SS103J
R 514		RS1/16SS473J
R 515		RS1/16SS473J
R 517		RS1/16SS103J
R 519		RS1/16SS473J
R 521		RS1/16SS473J
R 532	(X1/EW)	RS1/16SS104J
R 533	(X1/EW)	RS1/16SS332J
	(N1/UC)	RS1/16SS103J
R 534		RS1/16SS103J
R 535		RS1/16SS103J
R 536		RS1/16SS0R0J
R 537	(X1/EW)	RS1/16S0R0J
R 538	(X1/EW)	RS1/16SS0R0J

CAPACITORS

C 401		CCSRCH100D50
C 402		CCSSCH101J50
C 403		CKSSYB104K10
C 404		CCSSCH101J50
C 405		CCSRUJ220J50
C 406		CCSRUJ220J50
C 407		CKSSYB333K16
C 408		CKSSYB182K50
C 409		CSZS100M6R3
C 410		CKSSYB103K16
C 411		CKSSYB102K50
C 412		CKSSYB102K50
C 413		CKSSYB104K10
C 414		CKSSYB104K10
C 415		CKSSYB104K10
C 416		CKSSYB104K10
C 417		CKSSYB104K10
C 418		CKSSYB102K50
C 419		CKSSYB104K10
C 420		CKSSYB104K10
C 421		CKSSYB102K50
C 422		CKSSYB103K16
C 423		CKSSYB104K10
C 424		CCSRCH102J50
C 425		CCSRCH271J50
C 426		CCSRCH102J50

Circuit Symbol and No.		Part No.
C 427		CKSSYB104K10
C 428		CKSSYB103K16
C 429		CCSRCH301J50
C 430		CCSSCH120J50
C 431		CCSRCH301J50
C 432		CKSSYB103K16
C 433		CCSRCH101J50
C 434		CKSSYB102K50
C 435		CKSSYB103K16
C 436		CKSSYB104K10
C 441		CKSRYB104K16
C 442		CCSRCH101J50
C 443		CKSRYB104K16
C 444		CKSSYB103K16
C 445		CKSSYB104K10
C 461	22µF/6.3V	CCH1408
C 462		CKSRYB104K16
C 463		CKSRYB104K16
C 464		CKSSYB103K16
C 465		CKSSYB103K16
C 466		CKSSYB103K16
C 467		CKSSYB103K16
C 468		CKSSYB104K10
C 469		CSZS100M10
C 470		CKSSYB104K10
C 471		CCSSCH101J50
C 501		CKSSYB104K10
C 502		CCSRCH150J50
C 503		CCSRCH150J50
C 504		CKSSYB104K10
C 506		CKSSYB104K10
C 507		CKSSYB104K10
C 508		CKSSYB104K10
C 509		CKSSYB104K10
C 511		CKSSYB104K10
C 512		CKSSYB104K10
C 514		CSZS100M6R3
C 515		CKSSYB104K10
C 516		CKSSYB104K10
C 517		CKSSYB104K10
C 518		CKSSYB104K10
C 535	(X1/EW)	CSZS100M6R3
C 539	(X1/EW)	CCSRCH100D50
C 540	(X1/EW)	CCSRCH100D50
C 541	(X1/EW)	CCSRCH561J50
C 542	(X1/EW)	CKSSYB104K10
C 543	(X1/EW)	CSZS100M6R3
C 544	(X1/EW)	CCSRCH331J50
C 545	(X1/EW)	CKSSYB104K10

Mother Tuner Unit
Consists of
Relay PCB
Mother PCB
Connector PCB

JKL

Unit Number:CWM9136(AVIC-X1/EW)
Unit Name:Mother Tuner Unit

MISCELLANEOUS

Circuit Symbol and No.		Part No.
IC 1001	IC	NJM2137V
IC 1002	IC	TA2050F
IC 1101	IC	HA12240FP
IC 1102	IC	TA2050F
IC 1201	IC	NJM2137V
IC 1301	IC	TA2050F
IC 1302	IC	NJM2137V
IC 1352	IC	NJM2137V
IC 1401	IC	NJM2391DL1-33
IC 1402	IC	NJM4558E
IC 1501	IC	CXA2069Q
IC 1551	IC	NJM2561F1
IC 1552	IC	NJM2561F1
IC 1601	IC	TC7SH04FU
IC 1603	IC	PE5411A
IC 1604	IC	TC7SH08FU
IC 1605	IC	TC7SH08FU
IC 1607	IC	TC7SH08FU
IC 1608	IC	TC7SH04FU
IC 1821	IC	NJM2904M
IC 1871	IC	S-812C33AMC-C2N
IC 1872	IC	S-L2980A50MC-C7J
IC 1901	IC	NJM2391DL1-33
IC 1902	IC	M5237ML
Q 1101	Transistor	DTC124EU
Q 1102	Transistor	2SA1576
Q 1201	Transistor	2SA1037K
Q 1202	Transistor	2SC2412K
Q 1401	Transistor	2SC3357
Q 1402	Transistor	2SC3127
Q 1403	Transistor	DTC124EU
Q 1404	Transistor	DTC124EU
Q 1405	Transistor	DTC124EU
Q 1406	Transistor	DTC124EU
Q 1551	Transistor	2SA1576
Q 1552	Transistor	2SA1576
Q 1555	Transistor	2SC2412K
Q 1556	Transistor	2SC2412K
Q 1557	Transistor	2SC2412K
Q 1558	Transistor	2SC2412K
Q 1559	Transistor	FMG12
Q 1581	Transistor	2SA1037K
Q 1582	Transistor	2SC4081
Q 1583	Transistor	2SC4081
Q 1601	Transistor	2SC2412K
Q 1607	Transistor	2SC4081
Q 1801	Transistor	2SC3545
Q 1802	Transistor	DTC144EK
Q 1803	Transistor	DTC144EK
Q 1821	Transistor	DTC114EU
Q 1822	Transistor	DTC114WK
Q 1871	Transistor	DTC114EU
Q 1872	Transistor	2SA1037K
Q 1881	Transistor	DTC114EU
Q 1901	Transistor	2SA1036K
Q 1902	Transistor	2SA1036K
Q 1903	Transistor	DTC114EK

Circuit Symbol and No.		Part No.
Q 1904	Transistor	DTC114EK
Q 1905	Transistor	2SB1260
Q 1906	Transistor	DTC114EK
Q 1907	Transistor	2SB1629
Q 1908	Transistor	2SD2396
Q 1909	Transistor	2SD2396
Q 1951	Transistor	2SD2098
Q 1952	Transistor	2SD2098
Q 2801	Transistor	2SC4081
Q 2831	Transistor	DTC323TU
Q 2832	Transistor	DTC323TU
Q 2833	Transistor	DTC323TU
Q 2844	Transistor	DTC323TU
Q 2845	Transistor	DTC323TU
Q 2846	Transistor	DTC323TU
Q 2886	Transistor	2SC4081
D 1001	Diode	UDZS6R8(B)
D 1002	Diode	UDZS6R8(B)
D 1003	Diode	UDZS6R8(B)
D 1004	Diode	UDZS6R8(B)
D 1005	Diode	UDZS6R8(B)
D 1006	Diode	UDZS6R8(B)
D 1007	Diode	UDZS6R8(B)
D 1008	Diode	UDZS6R8(B)
D 1009	Diode	UDZS6R8(B)
D 1010	Diode	UDZS6R8(B)
D 1011	Diode	UDZS6R8(B)
D 1012	Diode	UMZ6R8N
D 1013	Diode	MA153
D 1014	Diode	UMZ6R8N
D 1015	Diode	UMZ6R8N
D 1016	Diode	UDZS6R8(B)
D 1017	Diode	UDZS6R8(B)
D 1018	Diode	UDZS6R8(B)
D 1019	Diode	UMZ6R8N
D 1020	Diode	UMZ6R8N
D 1021	Diode	UMZ6R8N
D 1022	Diode	UMZ6R8N
D 1023	Diode	UDZS6R8(B)
D 1101	Diode	UMZ6R8N
D 1102	Diode	UMZ6R8N
D 1103	Diode	DAN202U
D 1201	Diode	1SS355
D 1202	Diode	1SS355
D 1203	Diode	HZU12(B2)
D 1204	Diode	HZU12(B2)
D 1205	Diode	HZU12(B2)
D 1206	Diode	HZU12(B2)
D 1207	Diode	UMZ6R8N
D 1208	Diode	UMZ6R8N
D 1301	Diode	UMZ6R8N
D 1302	Diode	UMZ6R8N
D 1303	Diode	UMZ6R8N
D 1304	Diode	UMZ6R8N
D 1353	Diode	UMZ6R8N
D 1354	Diode	UMZ6R8N
D 1401	Diode	1SR154-400
D 1402	Diode	1SR154-400
D 1403	Diode	1SR154-400
D 1551	Diode	MA153

Circuit Symbol and No.		Part No.
D 1552	Diode	MA153
D 1553	Diode	DAP202U
D 1580	Diode	MA111
D 1581	Diode	DAN202U
D 1582	Diode	UDZS8R2(B)
D 1602	Diode	DAN202U
D 1801	Diode	HZU3R3(B1)
D 1821	Diode	S1G-6904G2P
D 1822	Diode	UDZS18(B)
D 1823	Diode	UDZS18(B)
D 1824	Diode	1SS355
D 1871	Diode	UDZS5R6(B)
D 1881	Diode	UDZS18(B)
D 1882	Diode	1SS355
D 1883	Diode	UDZS6R8(B)
D 1884	Diode	RB500V-40
D 1902	Diode	HZU9R1(B3)
D 1903	Diode	UDZS5R6(B)
D 1950	Diode	UDZS13(B)
D 1951	Diode	UDZS5R6(B)
D 2801	Diode	UDZS6R8(B)
D 2802	Diode	UDZS6R8(B)
D 2811	Diode	UDZS10(B)
D 2812	Diode	UDZS10(B)
D 2813	Diode	UDZS5R6(B)
D 2814	Diode	UDZS5R6(B)
D 2886	Diode	S1G-6904G2P
D 2887	Diode	S1G-6904G2P
ZNR1401	Surge Protector	RCCA-201Q31UA-PI
L 1001	Inductor	CTF1334
L 1002	Inductor	CTF1334
L 1003	Inductor	CTF1334
L 1004	Inductor	CTF1334
L 1005	Inductor	CTF1306
L 1006	Inductor	CTF1306
L 1007	Inductor	CTF1306
L 1008	Inductor	CTF1306
L 1009	Inductor	CTF1306
L 1010	Inductor	CTF1306
L 1011	Inductor	CTF1306
L 1012	Inductor	CTF1306
L 1013	Inductor	CTF1334
L 1014	Inductor	CTF1334
L 1015	Inductor	CTF1334
L 1016	Inductor	CTF1382
L 1017	Inductor	CTF1334
L 1018	Inductor	CTF1382
L 1019	Inductor	CTF1382
L 1020	Inductor	CTF1334
L 1021	Inductor	CTF1334
L 1022	Inductor	CTF1334
L 1026	Inductor	CTF1399
L 1101	Inductor	LCTA2R2J2520
L 1102	Inductor	CTF1334
L 1103	Inductor	CTF1334
L 1104	Inductor	CTF1334
L 1105	Inductor	CTF1334
L 1201	Inductor	CTF1399
L 1301	Inductor	CTF1399
L 1302	Inductor	CTF1334

Circuit Symbol and No.		Part No.
L 1303	Inductor	CTF1334
L 1304	Inductor	CTF1334
L 1305	Inductor	CTF1334
L 1351	Inductor	CTF1399
L 1401	Inductor	LCTA4R7J2520
L 1402	Inductor	LCTAR12J2520
L 1403	Inductor	LCTA1R0J2520
L 1404	Inductor	LCTCR10K2125
L 1405	Inductor	LCTA1R0J2520
L 1406	Inductor	LCTA1R0J2520
L 1407	Coil	CTC1143
L 1408	Inductor	LCTCR10K2125
L 1409	Inductor	LCTCR18K2125
L 1410	Inductor	LCTA101J2520
L 1411	Coil	CTC1142
L 1412	Inductor	LCTA101J2520
L 1413	Coil	CTC1139
L 1501	Inductor	LCTA100J2520
L 1551	Inductor	LCTA101J2520
L 1552	Inductor	LCTA100J2520
L 1553	Inductor	LCTA100J2520
L 1554	Inductor	LCTA100J2520
L 1555	Inductor	LCTA100J2520
L 1601	Inductor	CTF1379
L 1602	Inductor	CTF1379
L 1603	Inductor	CTF1379
L 1604	Inductor	CTF1379
L 1766	Inductor	CTF1379
L 1801	Inductor	LCTCR22K2125
L 1802	Inductor	LCTA1R0J2520
L 1803	Inductor	LCTA2R2J2520
L 1804	Inductor	LCTA1R0J2520
L 1821	Inductor	CTF1306
L 1841	Inductor	CTF1334
L 1842	Inductor	CTF1334
L 1843	Inductor	CTF1334
L 1844	Inductor	CTF1334
L 1845	Inductor	CTF1334
L 1846	Inductor	CTF1334
L 1847	Inductor	CTF1393
L 1848	Inductor	CTF1393
L 1849	Inductor	CTF1393
L 1850	Inductor	CTF1334
L 1851	Inductor	CTF1334
L 1852	Inductor	CTF1306
L 1853	Inductor	CTF1306
L 1861	Inductor	CTF1334
L 1862	Inductor	CTF1334
L 1871	Inductor	CTF1334
L 1872	Inductor	CTF1393
L 1873	Inductor	CTF1393
L 1874	Inductor	CTF1557
L 1881	Inductor	CTF1306
L 2811	Inductor	CTF1557
L 2812	Inductor	CTF1557
L 2813	Inductor	CTF1334
L 2814	Inductor	CTF1334
L 2831	Inductor	CTF1306
L 2832	Inductor	CTF1306
L 2833	Inductor	CTF1306

Circuit Symbol and No.		Part No.
L 2834	Inductor	CTF1306
L 2835	Inductor	CTF1306
L 2836	Inductor	CTF1306
L 2851	Inductor	CTF1334
L 2852	Inductor	CTF1334
L 2853	Inductor	CTF1334
L 2854	Inductor	CTF1334
L 2855	Inductor	CTF1334
L 2856	Inductor	CTF1334
L 2857	Inductor	CTF1334
L 2859	Inductor	CTF1334
L 2861	Inductor	CTF1334
L 2862	Inductor	CTF1334
L 2886	Inductor	CTF1295
X 1601	Radiator 12.58MHz	CSS1601
VR1551	Semi-fixed 10kΩ(B)	CCP1448
FU1201	Fuse 4A	CEK1260
FU1701	Fuse 4A	CEK1260
FU1702	Fuse 4A	CEK1260
FU1950	Fuse 2A	CEK1257
FU2801	Fuse 5A	CEK1289
GY1861	Sensor	CSX1042
GY1865	Sensor	CSX1074
EF1001	EMI Filter	CCG1082
EF1201	EMI Filter	CCG1067
EF1301	EMI Filter	CCG1067
EF1351	EMI Filter	CCG1067
EF1701	EMI Filter	CCG1067
EF1901	EMI Filter	CCG1172
EF1902	EMI Filter	CCG1172
EF1903	EMI Filter	CCG1172
EF2801	EMI Filter	CCG1067
Y 1401	FM/AM Tuner Unit	CWE1650
Y 1801	Tuner Unit	CWE1674
	GPS Unit	CWX2929

RESISTORS

R 1001	RS1/16S750J
R 1004	RS1/16S472J
R 1005	RS1/16S472J
R 1006	RS1/16S512J
R 1007	RS1/16S102J
R 1008	RS1/16S101J
R 1009	RS1/16S512J
R 1010	RS1/16S101J
R 1011	RS1/16S101J
R 1012	RS1/16S223J
R 1013	RS1/16S223J
R 1014	RS1/16S102J
R 1015	RS1/16S102J
R 1016	RS1/16S563J
R 1017	RS1/16S473J
R 1102	RS1/16S102J
R 1104	RS1/10S101J
R 1105	RS1/10S101J
R 1106	RS1/10S620J
R 1107	RS1/16S102J
R 1108	RS1/16S102J
R 1109	RS1/16S223J

Circuit Symbol and No.	Part No.
R 1110	RS1/16S223J
R 1111	RS1/16S101J
R 1112	RS1/16S101J
R 1113	RS1/16S332J
R 1114	RS1/16S682J
R 1115	RS1/10S222J
R 1118	RS1/16S0R0J
R 1119	RS1/16S0R0J
R 1201	RS1/16S473J
R 1202	RS1/16S563J
R 1203	RS1/16S473J
R 1204	RS1/16S473J
R 1205	RS1/16S473J
R 1206	RS1/16S473J
R 1207	RS1/16S473J
R 1208	RS1/16S512J
R 1209	RS1/16S102J
R 1210	RS1/16S101J
R 1211	RS1/16S512J
R 1212	RS1/16S472J
R 1213	RS1/16S472J
R 1214	RS1/16S0R0J
R 1215	RS1/16S0R0J
R 1216	RS1/16S0R0J
R 1217	RS1/16S0R0J
R 1218	RS1/16S103J
R 1219	RS1/16S103J
R 1220	RS1/16S750J
R 1301	RS1/16S563J
R 1302	RS1/16S473J
R 1303	RS1/16S102J
R 1304	RS1/16S102J
R 1305	RS1/16S223J
R 1306	RS1/16S223J
R 1307	RS1/16S101J
R 1308	RS1/16S101J
R 1309	RS1/16S512J
R 1310	RS1/16S102J
R 1311	RS1/16S101J
R 1312	RS1/16S512J
R 1313	RS1/16S472J
R 1314	RS1/16S472J
R 1315	RS1/16S103J
R 1316	RS1/16S103J
R 1317	RS1/16S750J
R 1351	RS1/16S563J
R 1352	RS1/16S473J
R 1357	RS1/16S512J
R 1358	RS1/16S102J
R 1359	RS1/16S101J
R 1360	RS1/16S512J
R 1363	RS1/16S472J
R 1364	RS1/16S472J
R 1365	RS1/16S103J
R 1366	RS1/16S103J
R 1367	RS1/16S750J
R 1401	RS1/16S105J
R 1402	RS1/16S0R0J
R 1403	RS1/16S0R0J
R 1404	RS1/16S681J

Circuit Symbol and No.	Part No.
R 1405	RS1/16S681J
R 1406	RS1/16S821J
R 1407	RS1/16S103J
R 1408	RS1/16S103J
R 1409	RS1/16S273J
R 1410	RS1/16S273J
R 1411	RS1/16S330J
R 1412	RS1/16S183J
R 1413	RS1/16S183J
R 1414	RS1/16S151J
R 1415	RS1/16S753J
R 1416	RS1/16S753J
R 1417	RS1/16S681J
R 1418	RS1/16S152J
R 1419	RS1/16S332J
R 1420	RS1/16S680J
R 1421	RS1/16S151J
R 1422	RS1/16S151J
R 1423	RS1/16S101J
R 1424	RS1/16S680J
R 1425	RS1/16S473J
R 1426	RS1/16S681J
R 1427	RS1/16S473J
R 1428	RS1/16S681J
R 1429	RS1/16S681J
R 1430	RS1/16S681J
R 1431	RS1/16S681J
R 1432	RS1/16S473J
R 1433	RS1/16S473J
R 1501	RS1/16S0R0J
R 1502	RS1/16S0R0J
R 1505	RS1/16S562J
R 1506	RS1/16S562J
R 1507	RS1/16S562J
R 1508	RS1/16S562J
R 1509	RS1/16S562J
R 1510	RS1/16S562J
R 1511	RS1/16S101J
R 1512	RS1/16S101J
R 1551	RS1/16S0R0J
R 1552	RS1/16S0R0J
R 1553	RS1/16S182J
R 1554	RS1/16S182J
R 1555	RS1/16S102J
R 1556	RS1/16S102J
R 1557	RS1/16S103J
R 1558	RS1/16S123J
R 1559	RS1/16S123J
R 1560	RS1/16S103J
R 1561	RS1/16S473J
R 1562	RS1/16S473J
R 1563	RS1/16S471J
R 1564	RS1/16S471J
R 1565	RS1/16S471J
R 1566	RS1/16S471J
R 1567	RS1/16S821J
R 1568	RS1/16S821J
R 1569	RS1/16S821J
R 1570	RS1/16S821J
R 1571	RS1/16S104J

Circuit Symbol and No.	Part No.
R 1572	RS1/16S104J
R 1573	RS1/16S750J
R 1574	RS1/16S105J
R 1575	RS1/16S750J
R 1576	RS1/16S0R0J
R 1580	RS1/16S105J
R 1581	RS1/4S821J
R 1582	RS1/16S223J
R 1583	RS1/16S473J
R 1584	RS1/16S223J
R 1585	RS1/16S563J
R 1586	RS1/16S223J
R 1587	RS1/16S473J
R 1588	RS1/16S101J
R 1601	RS1/16S272J
R 1602	RS1/16S101J
R 1603	RS1/16S333J
R 1604	RS1/16S473J
R 1607	RS1/16S104J
R 1610	RS1/16S681J
R 1611	RS1/16S681J
R 1612	RAB4C681J
R 1613	RS1/16S472J
R 1614	RS1/16S681J
R 1615	RS1/16S473J
R 1617	RS1/16S681J
R 1618	RAB4C681J
R 1619	RS1/16S104J
R 1621	RS1/16S470J
R 1622	RS1/16S470J
R 1623	RS1/16S103J
R 1624	RS1/16S103J
R 1625	RAB4C681J
R 1626	RAB4C681J
R 1627	RS1/16S563J
R 1628	RAB4C681J
R 1629	RAB4C681J
R 1630	RS1/16S473J
R 1631	RAB4C681J
R 1632	RS1/16S473J
R 1633	RS1/16S473J
R 1634	RAB4C681J
R 1635	RAB4C681J
R 1636	RS1/16S473J
R 1637	RS1/16S473J
R 1638	RS1/16S104J
R 1640	RS1/16S681J
R 1641	RS1/16S681J
R 1642	RS1/16S473J
R 1643	RS1/16S473J
R 1644	RS1/16S473J
R 1647	RS1/16S473J
R 1651	RS1/16S473J
R 1652	RS1/16S473J
R 1657	RS1/16S473J
R 1658	RS1/16S473J
R 1659	RS1/16S473J
R 1661	RS1/16S681J
R 1662	RS1/16S681J
R 1663	RS1/16S681J

Circuit Symbol and No.	Part No.
R 1664	RS1/16S681J
R 1801	RS1/16S152J
R 1802	RS1/16S151J
R 1803	RS1/16S681J
R 1806	RS1/16S0R0J
R 1807	RS1/16S391J
R 1808	RS1/16S473J
R 1810	RS1/16S472J
R 1821	RS1/16S0R0J
R 1822	RS1/16S333J
R 1823	RS1/16S203J
R 1824	RS1/16S822J
R 1825	RS1/16S202J
R 1826	RS1/16S564J
R 1827	RS1/16S513J
R 1828	RS1/16S513J
R 1829	RS1/16S102J
R 1830	RS1/16S102J
R 1831	RS1/16S104J
R 1832	RS1/16S513J
R 1833	RS1/16S473J
R 1834	RS1/16S563J
R 1835	RS1/16S104J
R 1841	RS1/16S104J
R 1843	RS1/16S101J
R 1861	RS1/10S105J
R 1862	RS1/10S151J
R 1871	RS1/10S103J
R 1872	RS1/10S103J
R 1873	RN1/16SE1001D
R 1874	RN1/16SE1101D
R 1875	RN1/16SE1001D
R 1881	RS1/4S102J
R 1901	RS1/16S102J
R 1902	RS1/16S102J
R 1903	RS1/16S272J
R 1904	RS1/16S272J
R 1905	RS1/16S153J
R 1906	RS1/4S102J
R 1907	RS1/10S271J
R 1908	RS1/10S221J
R 1909	RS1/10S271J
R 1910	RS1/10S271J
R 1911	RS1/16S122J
R 1912	RS1/16S0R0J
R 1950	RS1/4S471J
R 1951	RS1/16S432J
R 1952	RS1/16S222J
R 1953	RS1/16S223J
R 1954	RS1/16S122J
R 2831	RS1/16S820J
R 2832	RS1/16S820J
R 2833	RS1/16S223J
R 2834	RS1/16S223J
R 2835	RS1/16S471J
R 2836	RS1/16S471J
R 2837	RS1/16S820J
R 2838	RS1/16S820J
R 2839	RS1/16S223J
R 2840	RS1/16S223J

Circuit Symbol and No.	Part No.
R 2841	RS1/16S471J
R 2842	RS1/16S471J
R 2843	RS1/16S820J
R 2844	RS1/16S820J
R 2845	RS1/16S223J
R 2846	RS1/16S223J
R 2847	RS1/16S471J
R 2848	RS1/16S471J
R 2849	RS1/16SS681J
R 2850	RS1/16S473J
R 2851	RS1/16S0R0J
R 2852	RS1/16S0R0J
R 2853	RS1/16S0R0J
R 2854	RS1/16S0R0J
R 2855	RS1/16S0R0J
R 2856	RS1/16S0R0J
R 2862	RS1/16S0R0J
R 2863	RS1/16S0R0J
R 2873	RS1/16S0R0J
R 2886	RS1/16S473J
R 2887	RS1/16S104J
R 2888	RS1/10S102J

CAPACITORS

Circuit Symbol and No.	Part No.
C 1001	CCSRCH101J50
C 1002	CCSRCH101J50
C 1003	CCSRCH101J50
C 1004	CCSRCH101J50
C 1005	CCSRCH101J50
C 1006	CKSRYF104Z25
C 1007	CCSRCH101J50
C 1008	CKSRYF104Z25
C 1009	CCSRCH101J50
C 1010	CKSRYF104Z25
C 1011	CCSRCH471J50
C 1012	CCSRCH101J50
C 1013	CCSRCH681J50
C 1014	CCSRCH101J50
C 1015	CCSRCH681J50
C 1016	CCSRCH101J50
C 1017	CCSRCH681J50
C 1018	CCSRCH101J50
C 1019	CCSRCH681J50
C 1020	CCSRCH101J50
C 1022	CKSYB106K6R3
C 1023	CKSYB106K6R3
C 1026	CCSRCJ3R0C50
C 1027	CKSRYB105K10
C 1028	CKSRYB105K10
C 1029	CKSRYB105K10
C 1030	CKSRYB105K10
C 1031	CKSRYB105K10
C 1032	CEV100M16
C 1033	CKSRYB104K16
C 1034	CEV100M16
C 1035	CEV220M16
C 1101	CKSRYB104K16
C 1102	CEV100M16
C 1103	CEV220M16

Circuit Symbol and No.		Part No.
C 1106		CKSRYB105K10
C 1107		CKSRYB105K10
C 1108		CKSRYB105K10
C 1109		CKSRYB105K10
C 1112		CCSRCH471J50
C 1113		CCSRCH471J50
C 1117		CKSRYB104K25
C 1201		CKSRYB104K16
C 1202		CEV100M16
C 1203		CKSRYB105K10
C 1204		CKSRYB103K50
C 1206		CCSRCJ3R0C50
C 1208		CKSYB106K6R3
C 1209		CKSYB106K6R3
C 1210		CKSRYB473K50
C 1301		CEV100M16
C 1302		CEV220M16
C 1303		CKSRYB104K16
C 1304		CEV100M16
C 1305		CKSRYB105K10
C 1306		CKSRYB105K10
C 1307		CKSRYB105K10
C 1308		CKSRYB105K10
C 1309		CKSRYB105K10
C 1311		CCSRCJ3R0C50
C 1313		CKSYB106K6R3
C 1314		CKSYB106K6R3
C 1315		CCSRCH471J50
C 1316		CKSRYB473K50
C 1318		CCSRCH471J50
C 1353		CKSRYB104K16
C 1354		CEV100M16
C 1355		CKSRYB105K10
C 1361		CCSRCJ3R0C50
C 1363		CKSYB106K6R3
C 1364		CKSYB106K6R3
C 1365		CKSRYB473K50
C 1401		CKSQYB225K10
C 1402		CKSQYB225K10
C 1403		CCSRCH270J50
C 1404		CKSYB475K16
C 1405		CKSRYB103K50
C 1406		CCSRCH220J50
C 1407		CKSRYB103K50
C 1408		CKSRYB103K50
C 1409		CCSRCH270J50
C 1410		CEV470M6R3
C 1411	220µF/16V	CCH1301
C 1412		CCSRCH330J50
C 1413		CCSRCH470J50
C 1414		CKSRYB103K50
C 1415		CKSRYB103K50
C 1418		CEV100M16
C 1419		CKSRYB103K50
C 1420		CCSRCH270J50
C 1421		CKSRYB103K50
C 1422		CCSRCH150J50
C 1423		CEV220M16
C 1424		CKSRYB103K50
C 1425		CCSRCH6R0D50

Circuit Symbol and No.		Part No.
C 1426		CKSRYB103K50
C 1427		CCSRCH6R0D50
C 1428		CKSRYB222K50
C 1429		CKSRYB103K50
C 1430		CKSRYB104K16
C 1431		CEV100M16
C 1432		CKSRYB103K50
C 1433		CKSRYB222K50
C 1434		CKSRYB222K50
C 1435		CKSRYB222K50
C 1436		CKSRYB103K50
C 1437		CKSRYB103K50
C 1442	220µF/16V	CCH1301
C 1501		CKSQYB105K16
C 1504		CKSQYB105K16
C 1505		CKSQYB105K16
C 1506		CKSQYB105K16
C 1507		CKSQYB105K16
C 1508		CKSQYB105K16
C 1509		CKSQYB105K16
C 1510		CKSQYB105K16
C 1511		CKSQYB105K16
C 1512		CKSQYB105K16
C 1513		CKSQYB105K16
C 1514		CKSQYB105K16
C 1515		CKSRYB103K50
C 1516		CEV220M16
C 1517		CEV100M16
C 1551		CCSRCH7R0D50
C 1552		CKSRYB222K50
C 1553		CKSRYB222K50
C 1554		CKSRYB222K50
C 1555		CKSRYB222K50
C 1556		CCSRCJ3R0C50
C 1557		CEV101M16
C 1558		CKSRYB103K50
C 1559		CKSQYB225K10
C 1560		CKSQYB225K10
C 1561		CEV100M16
C 1562		CEV100M16
C 1563		CKSYB475K16
C 1564		CKSYB475K16
C 1565		CKSRYB103K50
C 1566		CKSRYB103K50
C 1567		CEV470M16
C 1568		CEV470M16
C 1569		CEV330M10
C 1570		CEV101M4
C 1571		CEV330M10
C 1572		CEV101M4
C 1575		CKSRYB104K25
C 1576		CKSRYB104K25
C 1577		CEV101M16
C 1580	22µF	CCG1183
C 1601		CKSRYB103K50
C 1602		CKSRYB104K16
C 1603		CKSRYB103K50
C 1604		CEV100M16
C 1605		CKSRYB103K50
C 1606		CKSRYB222K50

Circuit Symbol and No.	Part No.
C 1607	CKSRYB103K50
C 1610	CKSRYB102K50
C 1611	CKSRYB102K50
C 1612	CKSRYB102K50
C 1613	CKSRYB102K50
C 1614	CKSRYB105K10
C 1615	CKSRYB103K50
C 1616	CKSRYB104K16
C 1619	CKSRYB104K16
C 1620	CKSRYB104K16
C 1621	CKSRYB104K16
C 1622	CKSRYB103K50
C 1623	CKSRYB103K50
C 1801	CKSRYB222K50
C 1802	CKSRYB103K50
C 1803	CCSRCH220J50
C 1805	CEV100M16
C 1806	CKSRYB473K50
C 1807	CEV220M16
C 1808	CKSRYB103K50
C 1809	CKSRYB103K50
C 1810	CKSRYB473K50
C 1811	CKSRYB103K50
C 1812	CKSRYB473K50
C 1821	CKSRYB823K16
C 1822	CKSRYB104K25
C 1823	CKSRYB103K50
C 1824	CKSRYB104K16
C 1825	CKSRYB102K50
C 1826	CKSRYF104Z25
C 1861	CKSRYB105K10
C 1862	CKSRYB103K50
C 1863	CKSYB106K6R3
C 1864	CKSRYB104K25
C 1865	CCSRCH102J50
C 1866	CKSRYB104K16
C 1871	CKSRYF103Z50
C 1872	CKSRYB104K25
C 1873	CKSRYB334K10
C 1874	CKSRYF103Z50
C 1875	CEV101M16
C 1876	CEV470M16
C 1877	CKSRYB104K16
C 1878	CKSRYF104Z25
C 1879	CKSRYB474K10
C 1880	CKSRYB104K25
C 1881	CKSRYB104K25
C 1882	CEV470M16
C 1901	CEV101M16
C 1902	CEV101M16
C 1903	CKSRYB104K16
C 1904	CKSRYB104K25
C 1905	CKSRYB103K50
C 1906	CKSRYB103K50
C 1907	CKSRYB103K50
C 1908	CEV101M16
C 1910	CEV101M16
C 1911	CKSRYB104K25
C 1912	CKSRYB103K50
C 1913	CKSRYB103K50

Circuit Symbol and No.	Part No.
C 1914	CKSRYB103K50
C 1915	CEV101M16
C 1916	CEV101M16
C 1917	CEV101M16
C 1918	CKSRYB103K50
C 1919	CEV101M16
C 1920	CKSRYB103K50
C 1921	CKSRYB103K50
C 1922	CKSRYB104K16
C 1923	CEV470M16
C 1924	CKSRYB103K50
C 1925	CEV220M16
C 1950	CEV101M16
C 1951	CKSRYB103K50
C 1952	CKSRYB103K50
C 1953	CEV101M16
C 1954	CEV101M16
C 1955	CKSRYB103K50
C 1956	CKSRYB103K50
C 1957	CEV101M16
C 2813	CKSRYF104Z25
C 2814	CKSRYF104Z25
C 2831	CEVW100M16
C 2832	CEVW100M16
C 2833	CKSRYB222K50
C 2834	CKSRYB222K50
C 2837	CEVW100M16
C 2838	CEVW100M16
C 2839	CKSRYB222K50
C 2840	CKSRYB222K50
C 2843	CEVW100M16
C 2844	CEVW100M16
C 2845	CKSRYB222K50
C 2846	CKSRYB222K50
C 2849	CKSSYB102K50
C 2851	CKSRYF103Z50
C 2879	CEV470M16
C 2880	CKSRYF104Z25
C 2886	CKSRYF104Z25
C 2887	CKSRYF104Z25

Mother Tuner Unit
Consists of
Relay PCB
Mother PCB
Connector PCB

JKL

Unit Number:CWM9137(AVIC-N1/UC)
Unit Name:Mother Tuner Unit

MISCELLANEOUS

Circuit Symbol and No.		Part No.
IC 1001	IC	NJM2137V
IC 1002	IC	TA2050F
IC 1101	IC	HA12240FP
IC 1102	IC	TA2050F
IC 1201	IC	NJM2137V
IC 1301	IC	TA2050F
IC 1302	IC	NJM2137V
IC 1352	IC	NJM2137V
IC 1401	IC	NJM2391DL1-33
IC 1402	IC	NJM4558E
IC 1501	IC	CXA2069Q
IC 1551	IC	NJM2561F1
IC 1552	IC	NJM2561F1
IC 1601	IC	TC7SH04FU
IC 1603	IC	PE5412A
IC 1604	IC	TC7SH08FU
IC 1605	IC	TC7SH08FU
IC 1607	IC	TC7SH08FU
IC 1608	IC	TC7SH04FU
IC 1821	IC	NJM2904M
IC 1871	IC	S-812C33AMC-C2N
IC 1872	IC	S-L2980A50MC-C7J
IC 1901	IC	NJM2391DL1-33
IC 1902	IC	M5237ML
Q 1101	Transistor	DTC124EU
Q 1102	Transistor	2SA1576
Q 1201	Transistor	2SA1037K
Q 1202	Transistor	2SC2412K
Q 1551	Transistor	2SA1576
Q 1552	Transistor	2SA1576
Q 1555	Transistor	2SC2412K
Q 1556	Transistor	2SC2412K
Q 1557	Transistor	2SC2412K
Q 1558	Transistor	2SC2412K
Q 1559	Transistor	FMG12
Q 1581	Transistor	2SA1037K
Q 1582	Transistor	2SC4081
Q 1583	Transistor	2SC4081
Q 1601	Transistor	2SC2412K
Q 1607	Transistor	2SC4081
Q 1821	Transistor	DTC114EU
Q 1822	Transistor	DTC114WK
Q 1871	Transistor	DTC114EU
Q 1872	Transistor	2SA1037K
Q 1881	Transistor	DTC114EU
Q 1901	Transistor	2SA1036K
Q 1902	Transistor	2SA1036K
Q 1903	Transistor	DTC114EK
Q 1904	Transistor	DTC114EK
Q 1905	Transistor	2SB1260
Q 1906	Transistor	DTC114EK
Q 1907	Transistor	2SB1629
Q 1908	Transistor	2SD2396
Q 1909	Transistor	2SD2396
Q 1951	Transistor	2SD2098
Q 1952	Transistor	2SD2098
Q 2801	Transistor	2SC4081
Q 2831	Transistor	DTC323TU
Q 2832	Transistor	DTC323TU
Q 2833	Transistor	DTC323TU
Q 2844	Transistor	DTC323TU
Q 2845	Transistor	DTC323TU
Q 2846	Transistor	DTC323TU
Q 2886	Transistor	2SC4081
D 1001	Diode	UDZS6R8(B)
D 1002	Diode	UDZS6R8(B)

Circuit Symbol and No.		Part No.
D 1003	Diode	UDZS6R8(B)
D 1004	Diode	UDZS6R8(B)
D 1005	Diode	UDZS6R8(B)
D 1006	Diode	UDZS6R8(B)
D 1007	Diode	UDZS6R8(B)
D 1008	Diode	UDZS6R8(B)
D 1009	Diode	UDZS6R8(B)
D 1010	Diode	UDZS6R8(B)
D 1011	Diode	UDZS6R8(B)
D 1012	Diode	UMZ6R8N
D 1013	Diode	MA153
D 1014	Diode	UMZ6R8N
D 1015	Diode	UMZ6R8N
D 1016	Diode	UDZS6R8(B)
D 1017	Diode	UDZS6R8(B)
D 1018	Diode	UDZS6R8(B)
D 1019	Diode	UMZ6R8N
D 1020	Diode	UMZ6R8N
D 1021	Diode	UMZ6R8N
D 1022	Diode	UMZ6R8N
D 1023	Diode	UDZS6R8(B)
D 1101	Diode	UMZ6R8N
D 1102	Diode	UMZ6R8N
D 1103	Diode	DAN202U
D 1201	Diode	1SS355
D 1202	Diode	1SS355
D 1203	Diode	HZU12(B2)
D 1204	Diode	HZU12(B2)
D 1205	Diode	HZU12(B2)
D 1206	Diode	HZU12(B2)
D 1207	Diode	UMZ6R8N
D 1208	Diode	UMZ6R8N
D 1301	Diode	UMZ6R8N
D 1302	Diode	UMZ6R8N
D 1303	Diode	UMZ6R8N
D 1304	Diode	UMZ6R8N
D 1353	Diode	UMZ6R8N
D 1354	Diode	UMZ6R8N
D 1401	Diode	1SR154-400
D 1402	Diode	1SR154-400
D 1403	Diode	1SR154-400
D 1551	Diode	MA153
D 1552	Diode	MA153
D 1553	Diode	DAP202U
D 1580	Diode	MA111
D 1581	Diode	DAN202U
D 1582	Diode	UDZS8R2(B)
D 1602	Diode	DAN202U
D 1821	Diode	S1G-6904G2P
D 1822	Diode	UDZS18(B)
D 1823	Diode	UDZS18(B)
D 1824	Diode	1SS355
D 1871	Diode	UDZS5R6(B)
D 1881	Diode	UDZS18(B)
D 1882	Diode	1SS355
D 1883	Diode	UDZS6R8(B)
D 1884	Diode	RB500V-40
D 1902	Diode	HZU9R1(B3)
D 1903	Diode	UDZS5R6(B)
D 1950	Diode	UDZS13(B)

Circuit Symbol and No.		Part No.
D 1951	Diode	UDZS5R6(B)
D 2801	Diode	UDZS6R8(B)
D 2802	Diode	UDZS6R8(B)
D 2811	Diode	UDZS10(B)
D 2812	Diode	UDZS10(B)
D 2813	Diode	UDZS5R6(B)
D 2814	Diode	UDZS5R6(B)
D 2886	Diode	S1G-6904G2P
D 2887	Diode	S1G-6904G2P
ZNR1401	Surge Protector	RCCA-201Q31UA-PI
L 1001	Inductor	CTF1334
L 1002	Inductor	CTF1334
L 1003	Inductor	CTF1334
L 1004	Inductor	CTF1334
L 1005	Inductor	CTF1306
L 1006	Inductor	CTF1306
L 1007	Inductor	CTF1306
L 1008	Inductor	CTF1306
L 1009	Inductor	CTF1306
L 1010	Inductor	CTF1306
L 1011	Inductor	CTF1306
L 1012	Inductor	CTF1306
L 1013	Inductor	CTF1334
L 1014	Inductor	CTF1334
L 1015	Inductor	CTF1334
L 1016	Inductor	CTF1382
L 1017	Inductor	CTF1334
L 1018	Inductor	CTF1382
L 1019	Inductor	CTF1382
L 1020	Inductor	CTF1334
L 1021	Inductor	CTF1334
L 1022	Inductor	CTF1334
L 1026	Inductor	CTF1399
L 1101	Inductor	LCTA2R2J2520
L 1102	Inductor	CTF1334
L 1103	Inductor	CTF1334
L 1104	Inductor	CTF1334
L 1105	Inductor	CTF1334
L 1201	Inductor	CTF1399
L 1301	Inductor	CTF1399
L 1302	Inductor	CTF1334
L 1303	Inductor	CTF1334
L 1304	Inductor	CTF1334
L 1305	Inductor	CTF1334
L 1351	Inductor	CTF1399
L 1401	Inductor	LCTA4R7J2520
L 1403	Inductor	LCTA1R0J2520
L 1405	Inductor	LCTA1R0J2520
L 1406	Inductor	LCTA1R0J2520
L 1501	Inductor	LCTA100J2520
L 1551	Inductor	LCTA101J2520
L 1552	Inductor	LCTA100J2520
L 1553	Inductor	LCTA100J2520
L 1554	Inductor	LCTA100J2520
L 1555	Inductor	LCTA100J2520
L 1601	Inductor	CTF1379
L 1602	Inductor	CTF1379
L 1603	Inductor	CTF1379
L 1604	Inductor	CTF1379
L 1766	Inductor	CTF1379

Circuit Symbol and No.		Part No.
L 1821	Inductor	CTF1306
L 1841	Inductor	CTF1334
L 1842	Inductor	CTF1334
L 1849	Inductor	CTF1393
L 1850	Inductor	CTF1334
L 1851	Inductor	CTF1334
L 1852	Inductor	CTF1306
L 1853	Inductor	CTF1306
L 1861	Inductor	CTF1334
L 1862	Inductor	CTF1334
L 1871	Inductor	CTF1334
L 1872	Inductor	CTF1393
L 1873	Inductor	CTF1393
L 1881	Inductor	CTF1306
L 2811	Inductor	CTF1557
L 2812	Inductor	CTF1557
L 2813	Inductor	CTF1334
L 2814	Inductor	CTF1334
L 2831	Inductor	CTF1306
L 2832	Inductor	CTF1306
L 2833	Inductor	CTF1306
L 2834	Inductor	CTF1306
L 2835	Inductor	CTF1306
L 2836	Inductor	CTF1306
L 2851	Inductor	CTF1334
L 2852	Inductor	CTF1334
L 2853	Inductor	CTF1334
L 2854	Inductor	CTF1334
L 2855	Inductor	CTF1334
L 2856	Inductor	CTF1334
L 2857	Inductor	CTF1334
L 2859	Inductor	CTF1334
L 2861	Inductor	CTF1334
L 2862	Inductor	CTF1334
L 2886	Inductor	CTF1295
X 1601	Radiator 12.58MHz	CSS1601
VR1551	Semi-fixed 10kΩ(B)	CCP1448
FU1201	Fuse 4A	CEK1260
FU1701	Fuse 4A	CEK1260
FU1702	Fuse 4A	CEK1260
FU1950	Fuse 2A	CEK1257
FU2801	Fuse 5A	CEK1289
GY1865	Sensor	CSX1074
GY1861	Sensor	CSX1042
EF1001	EMI Filter	CCG1082
EF1201	EMI Filter	CCG1067
EF1301	EMI Filter	CCG1067
EF1351	EMI Filter	CCG1067
EF1701	EMI Filter	CCG1067
EF1901	EMI Filter	CCG1172
EF1902	EMI Filter	CCG1172
EF1903	EMI Filter	CCG1172
EF2801	EMI Filter	CCG1067
Y 1401	FM/AM Tuner Unit	CWE1651
	GPS Unit	CWX2960

RESISTORS

Circuit Symbol and No.	Part No.
R 1001	RS1/16S750J
R 1004	RS1/16S472J
R 1005	RS1/16S472J
R 1006	RS1/16S512J
R 1007	RS1/16S102J
R 1008	RS1/16S101J
R 1009	RS1/16S512J
R 1010	RS1/16S101J
R 1011	RS1/16S101J
R 1012	RS1/16S223J
R 1013	RS1/16S223J
R 1014	RS1/16S102J
R 1015	RS1/16S102J
R 1016	RS1/16S563J
R 1017	RS1/16S473J
R 1102	RS1/16S102J
R 1104	RS1/10S101J
R 1105	RS1/10S101J
R 1106	RS1/10S620J
R 1107	RS1/16S102J
R 1108	RS1/16S102J
R 1109	RS1/16S223J
R 1110	RS1/16S223J
R 1111	RS1/16S101J
R 1112	RS1/16S101J
R 1113	RS1/16S332J
R 1114	RS1/16S682J
R 1115	RS1/10S222J
R 1118	RS1/16S0R0J
R 1119	RS1/16S0R0J
R 1201	RS1/16S473J
R 1202	RS1/16S563J
R 1203	RS1/16S473J
R 1204	RS1/16S473J
R 1205	RS1/16S473J
R 1206	RS1/16S473J
R 1207	RS1/16S473J
R 1208	RS1/16S512J
R 1209	RS1/16S102J
R 1210	RS1/16S101J
R 1211	RS1/16S512J
R 1212	RS1/16S472J
R 1213	RS1/16S472J
R 1214	RS1/16S0R0J
R 1215	RS1/16S0R0J
R 1216	RS1/16S0R0J
R 1217	RS1/16S0R0J
R 1218	RS1/16S103J
R 1219	RS1/16S103J
R 1220	RS1/16S750J
R 1301	RS1/16S563J
R 1302	RS1/16S473J
R 1303	RS1/16S102J
R 1304	RS1/16S102J
R 1305	RS1/16S223J
R 1306	RS1/16S223J
R 1307	RS1/16S101J
R 1308	RS1/16S101J
R 1309	RS1/16S512J
R 1310	RS1/16S102J
R 1311	RS1/16S101J
R 1312	RS1/16S512J

Circuit Symbol and No.	Part No.
R 1313	RS1/16S472J
R 1314	RS1/16S472J
R 1315	RS1/16S103J
R 1316	RS1/16S103J
R 1317	RS1/16S750J
R 1351	RS1/16S563J
R 1352	RS1/16S473J
R 1357	RS1/16S512J
R 1358	RS1/16S102J
R 1359	RS1/16S101J
R 1360	RS1/16S512J
R 1363	RS1/16S472J
R 1364	RS1/16S472J
R 1365	RS1/16S103J
R 1366	RS1/16S103J
R 1367	RS1/16S750J
R 1402	RS1/16S0R0J
R 1403	RS1/16S0R0J
R 1404	RS1/16S681J
R 1405	RS1/16S681J
R 1407	RS1/16S103J
R 1408	RS1/16S103J
R 1409	RS1/16S273J
R 1410	RS1/16S273J
R 1412	RS1/16S183J
R 1413	RS1/16S183J
R 1415	RS1/16S753J
R 1416	RS1/16S753J
R 1426	RS1/16S681J
R 1428	RS1/16S681J
R 1429	RS1/16S681J
R 1431	RS1/16S681J
R 1434	RS1/4S0R0J
R 1501	RS1/16S0R0J
R 1502	RS1/16S0R0J
R 1505	RS1/16S562J
R 1506	RS1/16S562J
R 1507	RS1/16S562J
R 1508	RS1/16S562J
R 1509	RS1/16S562J
R 1510	RS1/16S562J
R 1511	RS1/16S101J
R 1512	RS1/16S101J
R 1551	RS1/16S0R0J
R 1552	RS1/16S0R0J
R 1553	RS1/16S182J
R 1554	RS1/16S182J
R 1555	RS1/16S102J
R 1556	RS1/16S102J
R 1557	RS1/16S103J
R 1558	RS1/16S123J
R 1559	RS1/16S123J
R 1560	RS1/16S103J
R 1561	RS1/16S473J
R 1562	RS1/16S473J
R 1563	RS1/16S471J
R 1564	RS1/16S471J
R 1565	RS1/16S471J
R 1566	RS1/16S471J
R 1567	RS1/16S821J

Circuit Symbol and No.	Part No.
R 1568	RS1/16S821J
R 1569	RS1/16S821J
R 1570	RS1/16S821J
R 1571	RS1/16S104J
R 1572	RS1/16S104J
R 1573	RS1/16S750J
R 1574	RS1/16S105J
R 1575	RS1/16S750J
R 1576	RS1/16S0R0J
R 1580	RS1/16S105J
R 1581	RS1/4S821J
R 1582	RS1/16S223J
R 1583	RS1/16S473J
R 1584	RS1/16S223J
R 1585	RS1/16S563J
R 1586	RS1/16S223J
R 1587	RS1/16S473J
R 1588	RS1/16S101J
R 1601	RS1/16S272J
R 1602	RS1/16S101J
R 1603	RS1/16S333J
R 1604	RS1/16S473J
R 1607	RS1/16S104J
R 1610	RS1/16S681J
R 1611	RS1/16S681J
R 1612	RAB4C681J
R 1613	RS1/16S472J
R 1614	RS1/16S681J
R 1615	RS1/16S473J
R 1617	RS1/16S681J
R 1618	RAB4C681J
R 1619	RS1/16S104J
R 1621	RS1/16S470J
R 1622	RS1/16S470J
R 1623	RS1/16S103J
R 1624	RS1/16S103J
R 1625	RAB4C681J
R 1626	RAB4C681J
R 1627	RS1/16S563J
R 1629	RAB4C681J
R 1630	RS1/16S473J
R 1631	RAB4C681J
R 1632	RS1/16S473J
R 1633	RS1/16S473J
R 1634	RAB4C681J
R 1635	RAB4C681J
R 1636	RS1/16S473J
R 1637	RS1/16S473J
R 1638	RS1/16S104J
R 1640	RS1/16S681J
R 1641	RS1/16S681J
R 1642	RS1/16S473J
R 1643	RS1/16S473J
R 1644	RS1/16S473J
R 1647	RS1/16S473J
R 1651	RS1/16S473J
R 1652	RS1/16S473J
R 1657	RS1/16S473J
R 1658	RS1/16S473J
R 1659	RS1/16S473J

Circuit Symbol and No.	Part No.
R 1661	RS1/16S681J
R 1662	RS1/16S681J
R 1663	RS1/16S681J
R 1664	RS1/16S681J
R 1821	RS1/16S0R0J
R 1822	RS1/16S333J
R 1823	RS1/16S203J
R 1824	RS1/16S822J
R 1825	RS1/16S202J
R 1826	RS1/16S564J
R 1827	RS1/16S513J
R 1828	RS1/16S513J
R 1829	RS1/16S102J
R 1830	RS1/16S102J
R 1831	RS1/16S104J
R 1832	RS1/16S513J
R 1833	RS1/16S473J
R 1834	RS1/16S563J
R 1835	RS1/16S104J
R 1841	RS1/16S104J
R 1843	RS1/16S101J
R 1861	RS1/10S105J
R 1862	RS1/10S151J
R 1871	RS1/10S103J
R 1872	RS1/10S103J
R 1873	RN1/16SE1001D
R 1874	RN1/16SE1101D
R 1875	RN1/16SE1001D
R 1881	RS1/4S102J
R 1901	RS1/16S102J
R 1902	RS1/16S102J
R 1903	RS1/16S272J
R 1904	RS1/16S272J
R 1905	RS1/16S153J
R 1906	RS1/4S102J
R 1907	RS1/10S271J
R 1908	RS1/10S221J
R 1909	RS1/10S271J
R 1910	RS1/10S271J
R 1911	RS1/16S122J
R 1912	RS1/16S0R0J
R 1950	RS1/4S471J
R 1951	RS1/16S432J
R 1952	RS1/16S222J
R 1953	RS1/16S223J
R 1954	RS1/16S122J
R 2831	RS1/16S820J
R 2832	RS1/16S820J
R 2833	RS1/16S223J
R 2834	RS1/16S223J
R 2835	RS1/16S471J
R 2836	RS1/16S471J
R 2837	RS1/16S820J
R 2838	RS1/16S820J
R 2839	RS1/16S223J
R 2840	RS1/16S223J
R 2841	RS1/16S471J
R 2842	RS1/16S471J
R 2843	RS1/16S820J
R 2844	RS1/16S820J

Circuit Symbol and No.	Part No.
R 2845	RS1/16S223J
R 2846	RS1/16S223J
R 2847	RS1/16S471J
R 2848	RS1/16S471J
R 2849	RS1/16SS681J
R 2850	RS1/16S473J
R 2851	RS1/16S0R0J
R 2852	RS1/16S0R0J
R 2853	RS1/16S0R0J
R 2854	RS1/16S0R0J
R 2855	RS1/16S0R0J
R 2856	RS1/16S0R0J
R 2862	RS1/16S0R0J
R 2863	RS1/16S0R0J
R 2873	RS1/16S0R0J
R 2886	RS1/16S473J
R 2887	RS1/16S104J
R 2888	RS1/10S102J

CAPACITORS

C 1001	CCSRCH101J50
C 1002	CCSRCH101J50
C 1003	CCSRCH101J50
C 1004	CCSRCH101J50
C 1005	CCSRCH101J50
C 1006	CKSRYF104Z25
C 1007	CCSRCH101J50
C 1008	CKSRYF104Z25
C 1009	CCSRCH101J50
C 1010	CKSRYF104Z25
C 1011	CCSRCH471J50
C 1012	CCSRCH101J50
C 1013	CCSRCH681J50
C 1014	CCSRCH101J50
C 1015	CCSRCH681J50
C 1016	CCSRCH101J50
C 1017	CCSRCH681J50
C 1018	CCSRCH101J50
C 1019	CCSRCH681J50
C 1020	CCSRCH101J50
C 1022	CKSYB106K6R3
C 1023	CKSYB106K6R3
C 1026	CCSRCJ3R0C50
C 1027	CKSRYB105K10
C 1028	CKSRYB105K10
C 1029	CKSRYB105K10
C 1030	CKSRYB105K10
C 1031	CKSRYB105K10
C 1032	CEV100M16
C 1033	CKSRYB104K16
C 1034	CEV100M16
C 1035	CEV220M16
C 1101	CKSRYB104K16
C 1102	CEV100M16
C 1103	CEV220M16
C 1106	CKSRYB105K10
C 1107	CKSRYB105K10
C 1108	CKSRYB105K10
C 1109	CKSRYB105K10
C 1112	CCSRCH471J50

Circuit Symbol and No.		Part No.
C 1113		CCSRCH471J50
C 1117		CKSRYB104K25
C 1201		CKSRYB104K16
C 1202		CEV100M16
C 1203		CKSRYB105K10
C 1204		CKSRYB103K50
C 1206		CCSRCJ3R0C50
C 1208		CKSYB106K6R3
C 1209		CKSYB106K6R3
C 1210		CKSRYB473K50
C 1301		CEV100M16
C 1302		CEV220M16
C 1303		CKSRYB104K16
C 1304		CEV100M16
C 1305		CKSRYB105K10
C 1306		CKSRYB105K10
C 1307		CKSRYB105K10
C 1308		CKSRYB105K10
C 1309		CKSRYB105K10
C 1311		CCSRCJ3R0C50
C 1313		CKSYB106K6R3
C 1314		CKSYB106K6R3
C 1315		CCSRCH471J50
C 1316		CKSRYB473K50
C 1318		CCSRCH471J50
C 1353		CKSRYB104K16
C 1354		CEV100M16
C 1355		CKSRYB105K10
C 1361		CCSRCJ3R0C50
C 1363		CKSYB106K6R3
C 1364		CKSYB106K6R3
C 1365		CKSRYB473K50
C 1401		CKSQYB225K10
C 1402		CKSQYB225K10
C 1404		CKSYB475K16
C 1405		CKSRYB103K50
C 1407		CKSRYB103K50
C 1408		CKSRYB103K50
C 1410		CEV470M6R3
C 1411	220µF/16V	CCH1301
C 1415		CKSRYB103K50
C 1418		CEV100M16
C 1423		CEV220M16
C 1424		CKSRYB103K50
C 1425		CCSRCH6R0D50
C 1427		CCSRCH6R0D50
C 1429		CKSRYB103K50
C 1430		CKSRYB104K16
C 1431		CEV100M16
C 1442	220µF/16V	CCH1301
C 1501		CKSQYB105K16
C 1504		CKSQYB105K16
C 1505		CKSQYB105K16
C 1506		CKSQYB105K16
C 1507		CKSQYB105K16
C 1508		CKSQYB105K16
C 1509		CKSQYB105K16
C 1510		CKSQYB105K16
C 1511		CKSQYB105K16
C 1512		CKSQYB105K16

Circuit Symbol and No.		Part No.
C 1513		CKSQYB105K16
C 1514		CKSQYB105K16
C 1515		CKSRYB103K50
C 1516		CEV220M16
C 1517		CEV100M16
C 1551		CCSRCH7R0D50
C 1552		CKSRYB222K50
C 1553		CKSRYB222K50
C 1554		CKSRYB222K50
C 1555		CKSRYB222K50
C 1556		CCSRCJ3R0C50
C 1557		CEV101M16
C 1558		CKSRYB103K50
C 1559		CKSQYB225K10
C 1560		CKSQYB225K10
C 1561		CEV100M16
C 1562		CEV100M16
C 1563		CKSYB475K16
C 1564		CKSYB475K16
C 1565		CKSRYB103K50
C 1566		CKSRYB103K50
C 1567		CEV470M16
C 1568		CEV470M16
C 1569		CEV330M10
C 1570		CEV101M4
C 1571		CEV330M10
C 1572		CEV101M4
C 1575		CKSRYB104K25
C 1576		CKSRYB104K25
C 1577		CEV101M16
C 1580	22µF	CCG1183
C 1601		CKSRYB103K50
C 1602		CKSRYB104K16
C 1603		CKSRYB103K50
C 1604		CEV100M16
C 1605		CKSRYB103K50
C 1606		CKSRYB222K50
C 1607		CKSRYB103K50
C 1610		CKSRYB102K50
C 1611		CKSRYB102K50
C 1612		CKSRYB102K50
C 1613		CKSRYB102K50
C 1614		CKSRYB105K10
C 1615		CKSRYB103K50
C 1616		CKSRYB104K16
C 1619		CKSRYB104K16
C 1620		CKSRYB104K16
C 1621		CKSRYB104K16
C 1622		CKSRYB103K50
C 1623		CKSRYB103K50
C 1821		CKSRYB823K16
C 1822		CKSRYB104K25
C 1823		CKSRYB103K50
C 1824		CKSRYB104K16
C 1825		CKSRYB102K50
C 1826		CKSRYF104Z25
C 1861		CKSRYB105K10
C 1862		CKSRYB103K50
C 1863		CKSYB106K6R3
C 1864		CKSRYB104K25

Circuit Symbol and No.	Part No.
C 1865	CCSRCH102J50
C 1866	CKSRYB104K16
C 1871	CKSRYF103Z50
C 1872	CKSRYB104K25
C 1873	CKSRYB334K10
C 1874	CKSRYF103Z50
C 1875	CEV101M16
C 1876	CEV470M16
C 1877	CKSRYB104K16
C 1878	CKSRYF104Z25
C 1879	CKSRYB474K10
C 1880	CKSRYB104K25
C 1881	CKSRYB104K25
C 1882	CEV470M16
C 1901	CEV101M16
C 1902	CEV101M16
C 1903	CKSRYB104K16
C 1904	CKSRYB104K25
C 1905	CKSRYB103K50
C 1906	CKSRYB103K50
C 1907	CKSRYB103K50
C 1908	CEV101M16
C 1910	CEV101M16
C 1911	CKSRYB104K25
C 1912	CKSRYB103K50
C 1913	CKSRYB103K50
C 1914	CKSRYB103K50
C 1915	CEV101M16
C 1916	CEV101M16
C 1917	CEV101M16
C 1918	CKSRYB103K50
C 1919	CEV101M16
C 1920	CKSRYB103K50
C 1921	CKSRYB103K50
C 1922	CKSRYB104K16
C 1923	CEV470M16
C 1924	CKSRYB103K50
C 1925	CEV220M16
C 1950	CEV101M16
C 1951	CKSRYB103K50
C 1952	CKSRYB103K50
C 1953	CEV101M16
C 1954	CEV101M16
C 1955	CKSRYB103K50
C 1956	CKSRYB103K50
C 1957	CEV101M16
C 2813	CKSRYF104Z25
C 2814	CKSRYF104Z25
C 2831	CEVW100M16
C 2832	CEVW100M16
C 2833	CKSRYB222K50
C 2834	CKSRYB222K50
C 2837	CEVW100M16
C 2838	CEVW100M16
C 2839	CKSRYB222K50
C 2840	CKSRYB222K50
C 2843	CEVW100M16
C 2844	CEVW100M16
C 2845	CKSRYB222K50
C 2846	CKSRYB222K50

Circuit Symbol and No.	Part No.
C 2849	CKSSYB102K50
C 2851	CKSRYF103Z50
C 2879	CEV470M16
C 2880	CKSRYF104Z25
C 2886	CKSRYF104Z25
C 2887	CKSRYF104Z25

Monitor Unit
Consists of
Monitor PCB
Upper PCB
Inverter PCB

GHI

Unit Number:CWM9134(AVIC-X1/EW)
Unit Number:CWM9135(AVIC-N1/UC)
Unit Name:Monitor Unit

MISCELLANEOUS

IC 4001	IC	TC90A64AF-P
IC 4061	IC	TC7SH08FU
IC 4141	IC	TC7SH08FU
IC 4142	IC	TK15404AMI
IC 4151	IC	NJM2138V
IC 4181	IC	NJM082BV
IC 4212	IC	TC7SH08FU
IC 4311	IC	NJM062V
IC 4601	IC	PE5413A
IC 4602	IC	S-80835CNNB-B8U
IC 4651	IC	S-93C46BR0I-J8T1
IC 4701	IC	PD6340A
IC 4702	IC	TC7SH08FU
IC 4841	IC	R1130H251B
IC 4851	IC	R1224N102H
IC 4861	IC	MAX1748EUE
IC 4901	IC	NJM2903V
IC 5002	IC	TC7SET08FU
IC 5003	IC	OZ961IS
IC 5004	FET	SI6544DQ
IC 5005	FET	SI6544DQ
Q 4002	Transistor	2SC4617
Q 4101	Transistor	2SC4617
Q 4102	Transistor	2SA1774
Q 4103	Transistor	2SC4617
Q 4111	Transistor	2SC4617
Q 4112	Transistor	2SA1774
Q 4113	Transistor	2SC4617
Q 4121	Transistor	2SC4617
Q 4122	Transistor	2SA1774
Q 4123	Transistor	2SC4617
Q 4131	Transistor	2SC4617
Q 4132	Transistor	2SA1774
Q 4133	Transistor	2SC4617
Q 4151	Transistor	UMZ1N
Q 4152	Transistor	UMZ1N
Q 4153	Transistor	UMZ1N
Q 4154	Transistor	UMZ1N

Circuit Symbol and No.		Part No.
Q 4155	Transistor	UMZ1N
Q 4156	Transistor	UMZ1N
Q 4182	Transistor	UMX2N
Q 4183	Transistor	UMT2N
Q 4603	Transistor	2SC4617
Q 4681	Transistor	IMD2A
Q 4682	Transistor	IMD2A
Q 4683	Transistor	FMG12
Q 4741	Transistor	DTA123JK
Q 4742	Transistor	DTC124EK
Q 4831	Transistor	2SB1260
Q 4832	Transistor	DTC114EK
Q 4833	Transistor	2SC4617
Q 4835	Transistor	2SD1664
Q 4851	FET	CPH6316
Q 5001	Transistor	2SC4617
Q 5002	Transistor	2SC4617
Q 5003	Transistor	DTA144EE
Q 5004	Transistor	2SC4617
Q 5011	Transistor	2SC4081
Q 5020	Transistor	2SC4617
Q 5101	Transistor	2SC4617
Q 5102	Transistor	2SC4617
Q 5103	Transistor	2SA1774
Q 5105	Transistor	UMX2N
D 4301	Diode	DAN202U
D 4311	Diode	AM-30-21
D 4321	LED	CL-490S-WF-SD
D 4322	LED	CL-490S-WF-SD
D 4355	LED	CL-190UB2-X
D 4356	LED	CL-190UB2-X
D 4357	LED	CL-190UB2-X
D 4358	LED	CL-190UB2-X
D 4601	Diode	RB500V-40
D 4681	Diode	MA111
D 4682	Diode	MA111
D 4683	Diode	UDZS5R6(B)
D 4684	Diode	UDZS5R6(B)
D 4701	Diode	UDZS5R6(B)
D 4702	Diode	UDZS5R6(B)
D 4703	Diode	UDZS5R6(B)
D 4704	Diode	UDZS5R6(B)
D 4705	Diode	UDZS5R6(B)
D 4706	Diode	UDZS5R6(B)
D 4831	Diode	UDZS22(B)
D 4835	Diode	UDZS5R6(B)
D 4852	Diode	U2FWJ44N
D 4861	Diode	RB160M-30
D 4862	Diode	RB500V-40
D 4863	Diode	RB500V-40
D 4864	Diode	RB500V-40
D 4865	Diode	RB500V-40
D 4866	Diode	RB500V-40
D 4867	Diode	RB500V-40
D 4868	Diode	RB500V-40
D 4869	Diode	RB500V-40
D 5001	Diode	UDZS6R8(B)
D 5003	LED	CL-195PG-CD
D 5004	LED(X1/EW)	CL-195SR-CD
D 5005	LED	CL-195PG-CD

Circuit Symbol and No.		Part No.
D 5006	LED(X1/EW)	CL-195SR-CD
D 5007	LED	CL-190UB2-X
D 5008	LED	CL-190UB2-X
D 5009	Diode	RB751V40
D 5010	Diode	UDZS6R2(B)
D 5011	Diode	UDZS6R2(B)
D 5012	Diode	UDZS6R2(B)
D 5013	Diode	MA147
D 5014	Diode	MA147
D 5016	Diode	UDZS5R6(B)
D 5030	Diode(X1/EW)	DAN202U
D 5101	Diode	UDZS8R2(B)
L 4001	Inductor	CTF1306
L 4002	Inductor	CTF1306
L 4003	Inductor	CTF1306
L 4004	Inductor	CTF1306
L 4005	Inductor-Array	CTF1421
L 4006	Inductor-Array	CTF1421
L 4008	Inductor	CTF1306
L 4009	Inductor	CTF1306
L 4011	Inductor	CTF1306
L 4012	Ferrite Bead	CTF1528
L 4013	Ferrite Bead	CTF1528
L 4014	Ferrite Bead	CTF1528
L 4015	Inductor	CTF1306
L 4016	Ferrite Bead	CTF1528
L 4017	Inductor	CTF1306
L 4071	Inductor	LCKA100J2520
L 4074	Inductor	LCKA100J2520
L 4075	Inductor	LCKB100K2520
L 4078	Inductor	LCKA100J2520
L 4079	Inductor	CTF1306
L 4081	Inductor	LCYC2R2K2125
L 4101	Inductor	LCKA100J2520
L 4141	Inductor	LCKA100J2520
L 4151	Inductor	LCKA100J2520
L 4152	Inductor	LCKA100J2520
L 4181	Inductor	LCKA101J2520
L 4182	Inductor	LCKA101J2520
L 4311	Inductor	LCKA100J2520
L 4601	Inductor	LCKA100J2520
L 4701	Inductor	LCKA100J2520
L 4801	Inductor	LCKA100J2520
L 4802	Inductor	LCKA100J2520
L 4803	Inductor	LCKA100J2520
L 4804	Inductor	LCKA100J2520
L 4841	Choke Coil 10µH	CTH1249
L 4851	Choke Coil 10µH	CTH1259
L 4852	Choke Coil 18µH	CTH1250
L 4861	Choke Coil 10µH	CTH1249
L 4862	Choke Coil 6.8µH	CTH1248
L 4863	Inductor	LCTC100K1608
L 4864	Inductor	LCKA100J2520
L 4865	Inductor	LCKA100J2520
L 4901	Inductor	LCKA2R2J2520
T 5001	Transformer	CTT1103
TH4601	Thermistor	CCX1051
X 4001	Crystal Resonator 42MHz	CSS1604
X 4601	Radiator 12.58MHz	CSS1601
X 4701	Ceramic Resonator 4.97MHz	CSS1573

Circuit Symbol and No.		Part No.
S 4351	Push Switch	CSG1111
S 4352	Push Switch	CSG1111
S 4353	Push Switch	CSG1111
S 4354	Push Switch	CSG1111
S 5001	Push Switch	CSG1111
S 5002	Push Switch	CSG1111
S 5003	Push Switch	CSG1111
VR5001	Semi-fixed 15KΩ(B)	CCP1424
FU4831	Fuse 630mA	CEK1252
FU5001	Fuse 1.25A	CEK1255

RESISTORS

Circuit Symbol and No.	Part No.
R 4001	RS1/16S101J
R 4002	RS1/16S470J
R 4003	RS1/16S101J
R 4004	RS1/16S101J
R 4005	RS1/16S473J
R 4006	RS1/16S392J
R 4009	RS1/16S152J
R 4010	RS1/16S331J
R 4012	RS1/16SS105J
R 4013	RS1/16S391J
R 4014	RAB4C101J
R 4015	RS1/16S473J
R 4018	RS1/16S101J
R 4022	RS1/16S101J
R 4023	RS1/16S0R0J
R 4024	RS1/16S333J
R 4025	RS1/16S101J
R 4026	RS1/16S101J
R 4027	RS1/16S101J
R 4030	RS1/16S101J
R 4031	RS1/16S101J
R 4061	RS1/16S473J
R 4062	RS1/16S152J
R 4063	RS1/16S0R0J
R 4064	RS1/16S0R0J
R 4084	RS1/16S473J
R 4085	RS1/16S473J
R 4086	RS1/16S473J
R 4087	RS1/16S104J
R 4088	RS1/16S104J
R 4089	RS1/16S104J
R 4101	RS1/16S8201F
R 4102	RS1/16S5602F
R 4103	RS1/16S681J
R 4104	RS1/16S331J
R 4105	RS1/16S104J
R 4107	RS1/16S6801D
R 4108	RS1/16S331J
R 4109	RS1/16S391J
R 4110	RS1/16S391J
R 4111	RS1/16S153J
R 4112	RS1/16S104J
R 4113	RS1/16S681J
R 4114	RS1/16S331J
R 4115	RS1/16S75R0D
R 4118	RS1/16S331J
R 4119	RS1/16S391J

Circuit Symbol and No.	Part No.
R 4120	RS1/16S391J
R 4121	RS1/16S153J
R 4122	RS1/16S104J
R 4123	RS1/16S681J
R 4124	RS1/16S331J
R 4125	RS1/16S75R0D
R 4128	RS1/16S331J
R 4129	RS1/16S391J
R 4130	RS1/16S391J
R 4131	RS1/16S153J
R 4132	RS1/16S104J
R 4133	RS1/16S681J
R 4134	RS1/16S331J
R 4135	RS1/16S75R0D
R 4138	RS1/16S331J
R 4139	RS1/16S391J
R 4140	RS1/16S391J
R 4141	RS1/16S105J
R 4142	RS1/16S224J
R 4145	RS1/16S1501D
R 4146	RS1/16S5602F
R 4147	RS1/16S3302F
R 4148	RS1/16S1002F
R 4150	RS1/16S183J
R 4152	RS1/16S3901F
R 4153	RS1/16S1501F
R 4154	RS1/16S102J
R 4155	RS1/16S102J
R 4156	RS1/16S1501F
R 4157	RS1/16S3901F
R 4160	RS1/16S1002F
R 4161	RS1/16S1802F
R 4162	RS1/16S102J
R 4163	RS1/16S3901F
R 4164	RS1/16S1501F
R 4165	RS1/16S102J
R 4166	RS1/16S272J
R 4167	RS1/16S102J
R 4168	RS1/16S272J
R 4169	RS1/16S102J
R 4170	RS1/16S272J
R 4171	RS1/16S331J
R 4172	RS1/16S103J
R 4174	RS1/16S331J
R 4175	RS1/16S103J
R 4177	RS1/16S331J
R 4178	RS1/16S103J
R 4180	RS1/16S243J
R 4181	RS1/16S3002F
R 4182	RS1/16S223J
R 4183	RS1/16S1203F
R 4184	RS1/16S1602F
R 4185	RS1/16S1502F
R 4186	RS1/16S1002F
R 4187	RS1/16S1002F
R 4188	RS1/16S101J
R 4189	RS1/16S153J
R 4190	RS1/16S100J
R 4191	RS1/16S153J
R 4192	RS1/16S100J

Circuit Symbol and No.	Part No.
R 4193	RS1/16S0R0J
R 4194	RS1/16S0R0J
R 4208	RS1/16S101J
R 4209	RS1/16S101J
R 4211	RS1/16S681J
R 4311	RS1/16S275J
R 4312	RS1/16S105J
R 4313	RS1/16SS393J
R 4314	RS1/16S103J
R 4315	RS1/16SS121J
R 4321	RS1/16SS121J
R 4322	RS1/16SS121J
R 4323	RS1/16SS121J
R 4324	RS1/16SS121J
R 4359	RS1/16SS181J
R 4360	RS1/16SS121J
R 4361	RS1/16SS121J
R 4362	RS1/16SS121J
R 4363	RS1/16SS181J
R 4364	RS1/16SS121J
R 4365	RS1/16SS121J
R 4366	RS1/16SS121J
R 4453	RS1/16S101J
R 4454	RS1/16S101J
R 4601	RS1/16S473J
R 4602	RS1/16S473J
R 4603	RS1/16S473J
R 4604	RS1/16SS471J
R 4605	RS1/16SS471J
R 4606	RAB4CQ471J
R 4607	RAB4CQ471J
R 4608	RS1/16SS471J
R 4610	RS1/16SS471J
R 4611	RS1/16S470J
R 4612	RS1/16S470J
R 4613	RS1/16S272J
R 4614	RS1/16S272J
R 4615	RS1/16SS471J
R 4616	RS1/16S104J
R 4617	RS1/16S473J
R 4618	RS1/16SS471J
R 4619	RS1/16S473J
R 4621	RS1/16S223J
R 4622	RS1/16S473J
R 4623	RS1/16S0R0J
R 4624	RAB4CQ473J
R 4625	RS1/16S103J
R 4626	RS1/16S473J
R 4627	RAB4CQ472J
R 4628	RS1/16S0R0J
R 4629	RS1/16S473J
R 4630	RS1/16S0R0J
R 4631	RAB4CQ471J
R 4642	RS1/16S473J
R 4646	RS1/16S473J
R 4650	RS1/16SS471J
R 4651	RAB4CQ471J
R 4652	RS1/16SS471J
R 4655	RS1/16S102J
R 4657	RS1/16SS0R0J

Circuit Symbol and No.	Part No.
R 4670	RS1/16S1502D
R 4681	RS1/16S105J
R 4682	RS1/16S105J
R 4683	RS1/16S102J
R 4684	RS1/16S102J
R 4701	RS1/16S101J
R 4702	RS1/16S101J
R 4703	RS1/16S101J
R 4704	RS1/16S101J
R 4705	RS1/16S471J
R 4707	RS1/16S0R0J
R 4709	RS1/16SS472J
R 4711	RS1/16S471J
R 4741	RS1/16S0R0J
R 4742	RS1/16S0R0J
R 4743	RS1/16S473J
R 4802	RS1/16S0R0J
R 4803	RS1/16S333J
R 4804	RS1/16S0R0J
R 4805	RS1/16S0R0J
R 4806	RS1/16S0R0J
R 4831	RS1/16S153J
R 4832	RS1/16S472J
R 4833	RS1/16S472J
R 4834	RS1/16S103J
R 4835	RS1/16S121J
R 4851	RS1/16S5102D
R 4852	RS1/16S2202D
R 4853	RS1/16S272J
R 4854	RS1/16S100J
R 4855	RS1/16S102J
R 4858	RS1/16S560J
R 4859	RS1/16S100J
R 4861	RS1/16S104J
R 4862	RS1/16S102J
R 4863	RS1/16S1102F
R 4864	RS1/16S2001F
R 4865	RS1/16S3302F
R 4866	RS1/16S2401F
R 4867	RS1/16S5602F
R 4868	RS1/16S2703F
R 4869	RS1/16S5602F
R 4901	RS1/16S103J
R 4902	RS1/16S103J
R 4903	RS1/16S392J
R 4904	RS1/16S912J
R 4905	RS1/16S2003F
R 4906	RS1/16S153J
R 4907	RS1/16S153J
R 5001 (X1/EW)	RAB4CQ181J
R 5002	RAB4CQ151J
R 5003	RS1/16S103J
R 5004	RAB4CQ151J
R 5005	RS1/16S104J
R 5006	RS1/16S102J
R 5007	RS1/16S473J
R 5008	RS1/16S473J
R 5009	RS1/16S105J
R 5010	RS1/16S333J
R 5011	RS1/16S513J

Circuit Symbol and No.		Part No.
R 5014		RS1/16S102J
R 5015		RS1/16S105J
R 5016		RS1/16S563J
R 5017		RS1/16S103J
R 5018		RS1/16S103J
R 5019		RS1/16S511J
R 5020		RS1/16S821J
R 5022		RS1/16SS181J
R 5023		RS1/16SS0R0J
R 5024	(X1/EW)	RS1/16SS151J
R 5030	(N1/UC)	RS1/16S470J
R 5031		RS1/16S332J
R 5101		RS1/16S101J
R 5102		RS1/16S103J
R 5103		RS1/16S471J
R 5104		RS1/16S101J
R 5105		RS1/16S104J
R 5106		RS1/16S103J
R 5107		RS1/16S473J
R 5108		RS1/16S101J
R 5109		RS1/16S824J

CAPACITORS

Circuit Symbol and No.	Part No.
C 4001	CKSRYB105K6R3
C 4002	CKSSYF104Z16
C 4003	CKSSYF104Z16
C 4004	CKSSYF104Z16
C 4005	CKSSYF104Z16
C 4006	CKSSYF104Z16
C 4007	CKSSYF104Z16
C 4008	CKSSYF104Z16
C 4009	CKSSYF104Z16
C 4010	CKSSYF104Z16
C 4011	CKSSYF104Z16
C 4012	CKSSYF104Z16
C 4013	CKSRYB392K50
C 4015	CKSRYB105K6R3
C 4016	CKSSYF104Z16
C 4017	CKSSYF104Z16
C 4018	CKSRYB104K16
C 4019	CKSRYB104K16
C 4020	CKSRYB104K16
C 4021	CKSSYF104Z16
C 4022	CKSSYF104Z16
C 4023	CKSSYF104Z16
C 4024	CKSSYF104Z16
C 4025	CKSSYF104Z16
C 4026	CKSSYF104Z16
C 4027	CKSSYF104Z16
C 4028	CKSSYF104Z16
C 4029	CKSSYF104Z16
C 4030	CKSRYB104K16
C 4031	CKSSYF104Z16
C 4032	CKSSYF104Z16
C 4033	CKSSYF104Z16
C 4034	CKSSYF104Z16
C 4035	CKSRYB103K50
C 4036	CCSRCH4R0C50
C 4037	CKSSYF104Z16

Circuit Symbol and No.	Part No.
C 4040	CKSSYF104Z16
C 4042	CCSRCH181J50
C 4045	CCSRCH9R0D50
C 4046	CCSRCH9R0D50
C 4047	CKSSYF104Z16
C 4048	CKSSYF104Z16
C 4049	CKSSYF104Z16
C 4050	CKSRYB105K6R3
C 4051	CKSSYF104Z16
C 4052	CKSSYF104Z16
C 4054	CCSRCH101J50
C 4055	CKSRYF104Z25
C 4061	CKSRYF104Z25
C 4062	CCSRCH390J50
C 4071	CSZS100M10
C 4074	CKSRYB105K6R3
C 4075	CKSRYB105K6R3
C 4101	CKSYF106Z10
C 4102	CCSRCH470J50
C 4103	CCSRCH470J50
C 4104	CKSRYF104Z25
C 4105	CSZS100M10
C 4107	CKSYF106Z10
C 4111	CKSYF106Z10
C 4112	CCSRCH470J50
C 4113	CCSRCH470J50
C 4114	CKSRYF104Z25
C 4121	CKSYF106Z10
C 4122	CCSRCH470J50
C 4123	CCSRCH470J50
C 4124	CKSRYF104Z25
C 4131	CKSYF106Z10
C 4132	CCSRCH470J50
C 4133	CCSRCH470J50
C 4134	CKSRYF104Z25
C 4140	CKSQYB225K10
C 4141	CKSRYB105K6R3
C 4142	CKSRYF104Z25
C 4143	CSZS100M10
C 4144	CKSRYF104Z25
C 4145	CKSRYF104Z25
C 4151	CSZSR220M16
C 4152	CKSRYB103K50
C 4153	CCSRCH4R0C50
C 4154	CCSRCH4R0C50
C 4155	CCSRCH4R0C50
C 4156	CKSRYF104Z25
C 4160	CKSRYF104Z25
C 4161	CKSRYF104Z25
C 4162	CKSRYF104Z25
C 4163	CKSRYB105K6R3
C 4164	CKSRYB105K6R3
C 4165	CKSRYB105K6R3
C 4166	CKSRYF104Z25
C 4167	CKSRYF104Z25
C 4168	CKSRYF104Z25
C 4169	CKSRYB103K50
C 4170	CSZSR220M16
C 4171	CSZSR220M16
C 4181	CSZSR220M16

Circuit Symbol and No.		Part No.
C 4182		CKSRYF104Z25
C 4183		CSZSR4R7M25
C 4184		CKSRYF104Z25
C 4186		CKSRYF104Z25
C 4188		CKSRYF104Z25
C 4225		CKSRYF104Z25
C 4311		CKSRYB224K16
C 4312		CKSRYB104K16
C 4313		CKSRYB104K16
C 4314		CKSRYB104K16
C 4315		CKSRYB104K16
C 4321		CKSRYB104K16
C 4322		CKSRYB104K16
C 4375		CKSRYB104K16
C 4376		CKSRYB104K16
C 4377		CKSRYB104K16
C 4378		CKSRYB104K16
C 4601		CSZSR330M10
C 4602		CKSRYF104Z25
C 4603		CKSRYF104Z25
C 4605		CKSRYF104Z25
C 4621		CKSRYB103K50
C 4631	10µF	CCG1138
C 4632	10µF	CCG1138
C 4651		CKSRYF104Z25
C 4670		CKSSYF104Z16
C 4681		CKSRYB102K50
C 4682		CKSRYB102K50
C 4683		CKSRYB102K50
C 4684		CKSRYB102K50
C 4685		CKSRYB102K50
C 4686		CKSRYB102K50
C 4687		CKSRYF104Z25
C 4701		CSZSR330M10
C 4702		CKSSYF104Z16
C 4704		CKSRYF104Z25
C 4801		CSZSR4R7M25
C 4802		CKSRYF104Z25
C 4803		CSZS100M10
C 4804		CKSRYF104Z25
C 4805		CSZSR330M10
C 4806		CKSRYF104Z25
C 4807		CSZSR33M35
C 4808		CKSRYF104Z25
C 4809		CKSSYF104Z16
C 4810		CKSSYF104Z16
C 4831		CKSSYF104Z16
C 4832		CKSRYF104Z25
C 4835		CKSRYF104Z25
C 4836		CKSRYF104Z25
C 4841		CKSRYB105K6R3
C 4843	68µF/6.3V	CCH1440
C 4844		CKSRYF104Z25
C 4851		CKSRYB104K16
C 4852	68µF/6.3V	CCH1440
C 4853		CKSRYB104K16
C 4855	10µF	CCG1138
C 4856		CCSRCH102J50
C 4857		CCSRCH681J50
C 4858	10µF	CCG1138

Circuit Symbol and No.		Part No.
C 4859		CKSRYB224K16
C 4860		CKSYF106Z10
C 4861		CKSYF106Z10
C 4862		CCSRCH100D50
C 4863		CKSRYB683K16
C 4864		CKSRYB104K16
C 4865		CKSRYB471K50
C 4866		CKSRYB224K16
C 4867		CKSRYB104K16
C 4868		CKSRYB104K16
C 4869		CKSRYB104K16
C 4870		CKSRYB224K16
C 4871		CKSRYB224K16
C 4872		CKSRYB104K16
C 4873		CKSQYB105K16
C 4874		CKSQYB474K25
C 4875		CKSRYB104K16
C 4876		CKSQYB474K25
C 4877		CKSQYB105K16
C 4878		CKSRYB104K16
C 4879	33µF/10V	CCH1586
C 4881		CKSRYF104Z25
C 4882		CKSRYF104Z25
C 4883		CKSRYF104Z25
C 4884		CKSRYB104K16
C 4885	68µF/6.3V	CCH1440
C 4886		CKSRYF104Z25
C 4887		CKSRYF104Z25
C 4901		CKSRYF104Z25
C 4902		CSZSR220M10
C 4903		CFHSQ562J16
C 4904		CSZSR330M10
C 4905		CKSRYB102K50
C 5001		CKSRYB104K16
C 5002		CKSRYB105K6R3
C 5003		CSZSR330M10
C 5004		CKSRYB104K16
C 5005		CKSRYB104K16
C 5006		CKSRYB104K16
C 5007		CKSRYB105K6R3
C 5008		CKSQYB335K6R3
C 5010		CKSRYB104K16
C 5011		CKSRYB332K50
C 5012		CKSRYB105K6R3
C 5013		CKSRYB152K50
C 5014		CKSRYB104K16
C 5015		CKSRYB473K50
C 5016		CKSRYB103K50
C 5017		CFHSQ221J50
C 5018		CKSRYB473K50
C 5019	10µF	CCG1138
C 5020	10µF	CCG1138
C 5021		CKSQYB105K16
C 5022		CKSQYB105K16
C 5023	22pF	CCG1140
C 5024		CKSRYB223K50
C 5101		CKSRYB104K16
C 5102		CKSRYB104K16

Keyboard Unit
Consists of
Keyboard PCB
Panel PCB

BC

Unit Number:CWM9132(AVIC-X1/EW)
Unit Number:CWM9133(AVIC-N1/UC)
Unit Name:Keyboard Unit

MISCELLANEOUS

Circuit Symbol and No.		Part No.
IC 5501	IC	SBX3050-01
D 5501	Diode(X1/EW)	DAN202U
D 5504	LED	CL-190UB2-X
D 5505	LED	CL-190UB2-X
D 5509	LED	CL-190UB2-X
D 5510	LED	CL-190UB2-X
D 5512	LED(X1/EW)	CL-195SR-CD
D 5513	LED	CL-195PG-CD
D 5514	LED(X1/EW)	CL-195SR-CD
D 5515	LED	CL-195PG-CD
D 5516	LED	CL-195PG-CD
D 5517	LED(X1/EW)	CL-195SR-CD
D 5518	LED	CL-195PG-CD
D 5519	LED(X1/EW)	CL-195SR-CD
D 5520	LED(X1/EW)	CL-195SR-CD
D 5521	LED	CL-195PG-CD
D 5522	LED	CL-195PG-CD
D 5524	LED	CL-190UB2-X
D 5526	LED	CL-190UB2-X
D 5527	Diode	UDZS6R8(B)
D 5529	LED	CL-190UB2-X
D 5530	LED	CL-190UB2-X
D 5531	LED	CL-195SR-CD
D 5534	LED	CL-195PG-CD
D 5536	Diode(X1/EW)	DAN202U
D 5537	LED	CL-190UB2-X
D 5538	LED(X1/EW)	CL-195SR-CD
D 5540	LED	CL-190UB2-X
D 5901	LED	SML-010VT
S 5501	Push Switch	CSG1111
S 5502	Push Switch	CSG1111
S 5503	Push Switch	CSG1111
S 5504	Push Switch	CSG1111
S 5505	Push Switch	CSG1111
S 5506	Push Switch	CSG1111
S 5507	Push Switch	CSG1111
S 5508	Push Switch	CSG1111
S 5509	Push Switch	CSG1111
S 5510	Encoder(VOLUME)	CSD1106
S 5511	Switch(SELECT)	CSX1075
S 5901	Push Switch	CSG1111

RESISTORS

Circuit Symbol and No.		Part No.
R 5501		RS1/16SS121J
R 5502		RS1/16S202J
R 5503		RS1/16S392J
R 5504		RS1/16S123J
R 5505		RS1/16S122J
R 5506		RS1/16S202J
R 5507		RS1/16S122J
R 5508		RS1/16S151J
R 5509		RS1/16S151J
R 5510	(X1/EW)	RS1/16S181J
R 5511		RS1/16SS121J
R 5512		RS1/16SS121J
R 5513		RS1/16S202J
R 5514		RS1/16S392J
R 5515		RS1/16S123J
R 5516		RS1/16S102J
R 5517		RS1/16S151J
R 5518		RS1/16S820J
R 5519		RS1/16SS121J
R 5520		RS1/16S151J
R 5521		RS1/16S151J
R 5522		RS1/16SS121J
R 5524		RS1/16SS121J
R 5525		RS1/16S472J
R 5526	(X1/EW)	RS1/16S0R0J
R 5527	(X1/EW)	RS1/16S181J
R 5528	(X1/EW)	RS1/16S181J
R 5529		RS1/16S181J
R 5530		RS1/16SS121J
R 5531		RS1/16S151J
R 5532		RS1/16SS121J
R 5533	(X1/EW)	RS1/16S181J
R 5534		RS1/16SS121J
R 5535		RS1/16S470J
R 5536		RS1/16SS121J
R 5537	(X1/EW)	RS1/16S181J
R 5538		RS1/16SS121J
R 5539	(X1/EW)	RS1/16S181J
R 5540		RS1/16SS121J
R 5541		RS1/16SS121J
R 5542	(X1/EW)	RS1/16S181J
R 5543		RS1/16SS121J
R 5544		RS1/16SS0R0J
R 5545		RS1/16S0R0J
R 5546		RS1/16S0R0J
R 5547		RS1/16S0R0J
R 5548	(X1/EW)	RS1/16S0R0J
R 5549		RS1/16S122J
R 5550		RS1/16S392J
R 5551		RS1/16S0R0J
R 5558		RS1/16S121J
R 5561		RS1/16S121J
R 5563		RS1/16S101J
R 5565		RS1/16S121J
R 5566		RS1/16SS151J
R 5568		RS1/16SS151J
R 5573		RS1/16S151J
R 5574	(X1/EW)	RS1/16S181J
R 5575		RS1/16S151J
R 5585		RS1/16S181J
R 5587		RS1/16S151J
R 5588		RS1/16S151J
R 5589		RS1/16S151J
R 5590		RS1/16SS151J

Circuit Symbol and No.		Part No.
R 5592	(N1/UC)	RS1/16S150J
R 5593	(N1/UC)	RS1/16S270J
R 5596		RS1/16S121J
R 5597		RS1/16S820J
R 5598		RS1/16S121J
R 5599		RS1/16SS121J
R 5904		RS1/16S151J

CAPACITORS

C 5509		CSZSQ100M6R3
C 5516		CKSRYB103K50
C 5520		CKSYB106K6R3

D

Unit Number:CWX2941
Unit Name:DVD Core Unit(MS3)

MISCELLANEOUS

IC 1101	IC	AN8703FH
IC 1201	IC	BA5985FM
IC 1202	IC	AN8471SAT1
IC 1301	IC	MNZS26EDCUB
IC 1401	IC	TC74LCX245FT
IC 1402	IC	TC7SH04FU
IC 1403	IC	TC74LCX244FT
IC 1405	IC	TC74LCX244FT
IC 1501	IC	K4S641632F-TC75
IC 1502	IC	TC74VCX74FT
IC 1503	IC	MN677531KAUB
IC 1504	IC	TC74VCX74FT
IC 1505	IC	TC7PA04FU
IC 1507	IC	SM8707FV
IC 1602	IC	NJM2100M
IC 1604	IC	NJM2100V
IC 1605	IC	PCM1742KE
IC 1701	IC	PE5395A
IC 1702	IC	M5M5V216ATP-70HI
IC 1705	IC	PD6474A
IC 1706	IC	TC7SH08FU
Q 1101	Transistor	2SB1260
Q 1102	Transistor	2SB1260
Q 1103	Transistor	UN2211
Q 1104	Transistor	2SB709A
Q 1105	Transistor	2SD601A
Q 1201	Transistor	DTC124EU
Q 1501	Transistor	2SA1037K
D 1101	Diode	1SS355
D 1102	Diode	1SS355
D 1301	Diode	UDZ2R7(B)
D 1302	Chip LED	CL205IRXTU
L 1301	Inductor	CTF1409
L 1302	Inductor	CTF1394
L 1303	Inductor	CTF1395
L 1305	Inductor	CTF1409
L 1504	Inductor	CTF1394
L 1505	Inductor	CTF1409
L 1506	Inductor	CTF1473
L 1507	Inductor	CTF1473

Circuit Symbol and No.		Part No.
L 1508	Inductor	CTF1473
L 1509	Inductor	CTF1399
L 1510	Inductor	CTF1409
L 1518	Inductor	CTF1385
L 1520	Inductor	CTF1399
L 1522	Inductor	CTF1395
L 1605	Inductor	CTF1379
L 1701	Inductor	CTF1395
L 1702	Inductor	CTF1409
L 1703	Inductor	CTF1473
L 1704	Inductor	CTF1473
X 1501	Radiator 27MHz	CSS1609
X 1701	Ceramic Resonator 4.97MHz	CSS1575
VR1502	Semi-Fixed 2.2kΩ(B)	CCP1444

RESISTORS

R 1101	RS1/16SS101J
R 1102	RS1/16SS3R9J
R 1103	RS1/16SS3R9J
R 1104	RS1/16SS3R9J
R 1105	RS1/16SS3R9J
R 1106	RS1/16SS330J
R 1107	RS1/16SS3R9J
R 1108	RS1/16SS3R9J
R 1109	RS1/16SS3R9J
R 1110	RS1/16SS3R9J
R 1111	RS1/16SS272J
R 1112	RS1/16SS472J
R 1113	RS1/16SS102J
R 1124	RS1/16SS273J
R 1125	RS1/16SS273J
R 1126	RS1/16SS224J
R 1130	RS1/16SS0R0J
R 1131	RS1/16SS0R0J
R 1132	RS1/16SS0R0J
R 1133	RS1/16S2402D
R 1134	RS1/16S1002D
R 1135	RS1/16S2702D
R 1140	RS1/16SS105J
R 1141	RS1/16SS105J
R 1142	RS1/16SS105J
R 1151	RS1/16SS103J
R 1152	RS1/16SS103J
R 1201	RS1/16SS221J
R 1202	RS1/16SS393J
R 1203	RS1/16SS303J
R 1205	RS1/16SS0R0J
R 1206	RS1/16SS102J
R 1209	RS1/16SS221J
R 1210	RS1/16SS393J
R 1211	RS1/16SS393J
R 1212	RS1/16SS393J
R 1213	RS1/16SS393J
R 1214	RS1/16SS221J
R 1215	RS1/16SS1R0J
R 1216	RS1/16SS1R0J
R 1218	RS1/16SS221J
R 1219	RS1/16SS221J
R 1220	RS1/16SS221J
R 1221	RS1/16SS822J

Circuit Symbol and No.	Part No.
R 1222	RS1/16SS822J
R 1223	RS1/16SS822J
R 1224	RS1/16SS563J
R 1225	RS1/16SS243J
R 1226	RS1/16SS473J
R 1227	RS1/16SS473J
R 1228	RS1/16SS1R0J
R 1229	RS1/16SS1R0J
R 1230	RS1/16SS1R0J
R 1232	RS1/16SS822J
R 1233	RS1/16SS243J
R 1234	RS1/16S391J
R 1235	RS1/16S471J
R 1236	RS1/16SS513J
R 1237	RS1/16SS513J
R 1301	RS1/16SS222J
R 1321	RS1/16SS104J
R 1322	RS1/16SS0R0J
R 1323	RS1/16SS221J
R 1324	RS1/16SS221J
R 1334	RS1/16SS221J
R 1336	RS1/16SS103J
R 1337	RS1/16SS103J
R 1338	RS1/16SS472J
R 1339	RS1/16SS273J
R 1340	RS1/16SS472J
R 1341	RS1/16SS273J
R 1342	RS1/16SS273J
R 1344	RS1/16SS273J
R 1349	RS1/16SS562J
R 1350	RS1/16SS242J
R 1352	RS1/16S2702D
R 1353	RS1/16SS102J
R 1360	RS1/16SS153J
R 1361	RS1/16SS105J
R 1362	RS1/16SS473J
R 1363	RS1/16SS101J
R 1364	RS1/16SS123J
R 1365	RS1/16SS101J
R 1367	RS1/16SS473J
R 1369	RS1/16SS473J
R 1375	RS1/16SS103J
R 1376	RS1/16SS103J
R 1377	RS1/16SS103J
R 1378	RS1/16SS103J
R 1379	RS1/16SS103J
R 1380	RS1/16SS103J
R 1383	RS1/16SS103J
R 1391	RS1/16SS103J
R 1392	RS1/16SS103J
R 1393	RS1/16SS103J
R 1394	RS1/16SS471J
R 1395	RS1/16SS0R0J
R 1396	RS1/16SS0R0J
R 1401	RS1/16SS101J
R 1403	RAB4CQ220J
R 1404	RAB4CQ220J
R 1405	RAB4CQ220J
R 1406	RAB4CQ220J
R 1407	RS1/16SS220J

Circuit Symbol and No.	Part No.
R 1408	RS1/16SS103J
R 1409	RS1/16SS820J
R 1410	RS1/16SS820J
R 1411	RAB4CQ0R0J
R 1412	RS1/16SS100J
R 1413	RS1/16SS820J
R 1414	RAB4CQ820J
R 1415	RS1/16SS103J
R 1418	RS1/16SS221J
R 1421	RS1/16SS221J
R 1423	RS1/16SS221J
R 1424	RS1/16SS221J
R 1425	RAB4CQ221J
R 1426	RAB4CQ221J
R 1501	RS1/16SS220J
R 1502	RAB4CQ220J
R 1503	RS1/16S101J
R 1504	RAB4CQ220J
R 1505	RS1/16S101J
R 1508	RAB4CQ220J
R 1512	RAB4CQ220J
R 1518	RAB4CQ220J
R 1522	RAB4CQ220J
R 1523	RS1/16S0R0J
R 1527	RAB4CQ220J
R 1533	RS1/16SS201J
R 1534	RAB4CQ220J
R 1538	RAB4CQ220J
R 1539	RS1/16SS221J
R 1542	RS1/16SS103J
R 1543	RS1/16SS680J
R 1544	RS1/16SS0R0J
R 1545	RS1/16SS0R0J
R 1549	RS1/16SS0R0J
R 1550	RS1/16SS0R0J
R 1551	RS1/16SS0R0J
R 1552	RS1/16SS471J
R 1553	RS1/16S68R0D
R 1554	RS1/16SS471J
R 1555	RS1/16SS0R0J
R 1556	RS1/16SS750J
R 1557	RS1/16SS0R0J
R 1558	RS1/16SS622J
R 1559	RAB4CQ0R0J
R 1560	RS1/16SS122J
R 1561	RS1/16SS162J
R 1562	RS1/16SS0R0J
R 1563	RS1/16SS4R7J
R 1564	RAB4CQ0R0J
R 1565	RS1/16S101J
R 1566	RS1/16S101J
R 1567	RAB4CQ0R0J
R 1568	RS1/16S101J
R 1569	RS1/16S101J
R 1570	RS1/16S101J
R 1571	RS1/16S220J
R 1572	RAB4CQ0R0J
R 1573	RS1/16SS473J
R 1574	RAB4CQ0R0J
R 1575	RAB4CQ0R0J

Circuit Symbol and No.	Part No.
R 1576	RAB4CQ0R0J
R 1577	RAB4CQ0R0J
R 1578	RS1/16SS472J
R 1579	RS1/16SS101J
R 1587	RS1/16SS101J
R 1595	RS1/16SS472J
R 1596	RS1/16SS472J
R 1597	RS1/16SS104J
R 1598	RS1/16SS270J
R 1601	RS1/16SS821J
R 1602	RS1/16SS821J
R 1603	RS1/16SS0R0J
R 1604	RS1/16SS0R0J
R 1605	RS1/16SS102J
R 1606	RS1/16SS102J
R 1607	RS1/16SS222J
R 1608	RS1/16SS222J
R 1609	RS1/16SS472J
R 1610	RS1/16SS472J
R 1611	RS1/16SS472J
R 1612	RS1/16SS472J
R 1613	RS1/16SS103J
R 1614	RS1/16SS103J
R 1615	RS1/16SS472J
R 1616	RS1/16SS472J
R 1626	RS1/16SS0R0J
R 1627	RS1/16SS0R0J
R 1628	RS1/16SS0R0J
R 1637	RS1/16SS104J
R 1638	RS1/16SS104J
R 1642	RS1/16SS221J
R 1643	RS1/16SS221J
R 1645	RS1/16SS0R0J
R 1647	RS1/16SS221J
R 1648	RS1/16SS221J
R 1649	RS1/16SS101J
R 1650	RS1/16SS101J
R 1651	RS1/16SS101J
R 1653	RS1/16SS473J
R 1656	RS1/16SS102J
R 1701	RS1/16SS473J
R 1704	RS1/16SS473J
R 1706	RS1/16SS104J
R 1707	RS1/16SS221J
R 1708	RS1/16SS221J
R 1714	RS1/16SS221J
R 1715	RS1/16SS473J
R 1716	RS1/16SS221J
R 1717	RS1/16SS104J
R 1718	RS1/16SS104J
R 1720	RS1/16SS104J
R 1721	RS1/16SS104J
R 1722	RS1/16SS104J
R 1723	RS1/16SS104J
R 1724	RS1/16SS222J
R 1725	RS1/16SS223J
R 1726	RS1/16SS104J
R 1727	RS1/16SS104J
R 1728	RS1/16SS104J
R 1730	RS1/16SS221J

Circuit Symbol and No.	Part No.
R 1731	RS1/16SS104J
R 1732	RS1/16SS0R0J
R 1733	RS1/16SS104J
R 1734	RS1/16SS221J
R 1735	RS1/16SS104J
R 1736	RS1/16SS104J
R 1737	RS1/16SS104J
R 1738	RS1/16SS104J
R 1739	RS1/16SS330J
R 1740	RS1/16SS0R0J
R 1741	RS1/16SS0R0J
R 1742	RS1/16SS473J
R 1746	RS1/16SS104J
R 1748	RS1/16SS104J
R 1749	RS1/16SS103J
R 1750	RS1/16SS473J
R 1751	RS1/16SS103J
R 1752	RS1/16SS104J
R 1753	RS1/16SS104J
R 1754	RS1/16SS104J
R 1756	RS1/16SS104J
R 1757	RS1/16SS472J
R 1758	RS1/16SS104J
R 1759	RS1/16SS104J
R 1760	RS1/16S1002D
R 1761	RS1/16SS105J
R 1762	RS1/16SS473J
R 1763	RS1/16SS104J
R 1764	RS1/16SS104J
R 1765	RS1/16SS104J
R 1767	RS1/16SS104J
R 1768	RS1/16SS473J
R 1769	RS1/16SS104J
R 1770	RS1/16SS473J
R 1771	RS1/16SS473J
R 1773	RS1/16SS103J
R 1790	RS1/16SS473J
R 1792	RS1/16SS0R0J
R 1794	RS1/16SS222J
R 1795	RS1/16SS104J
R 1796	RS1/16SS473J
R 1797	RS1/16SS104J
R 1798	RS1/16SS104J
R 1801	RS1/16SS104J
R 1802	RS1/16SS104J
R 1803	RS1/16SS104J
R 1804	RS1/16SS102J
R 1805	RS1/16SS102J

CAPACITORS

C 1101	CSZSC470M16
C 1102	CSZSR470M6R3
C 1103	CKSSYB104K10
C 1104	CKSSYB103K16
C 1105	CSZSR101M6R3
C 1106	CKSSYB104K10
C 1107	CKSSYB103K16
C 1108	CKSSYB104K10
C 1109	CKSRYB473K25

Circuit Symbol and No.	Part No.
C 1110	CKSRYB473K25
C 1111	CKSSYB103K16
C 1112	CKSRYB105K10
C 1113	CKSRYB105K10
C 1114	CKSSYB103K16
C 1121	CKSSYB221K50
C 1122	CKSRYB393K16
C 1124	CKSSYB221K50
C 1125	CKSSYB104K10
C 1126	CKSSYB104K10
C 1127	CKSSYB104K10
C 1128	CKSRYB472K50
C 1129	CKSSYB104K10
C 1132	CKSRYB561K50
C 1133	CKSRYB561K50
C 1134	CKSRYB273K16
C 1135	CKSSYB473K10
C 1136	CKSSYB104K10
C 1137	CKSSYB104K10
C 1138	CKSSYB104K10
C 1139	CKSSYB104K10
C 1201	CKSSYB104K10
C 1204	CEV101M16
C 1205	CKSRYB104K16
C 1206	CKSRYB103K50
C 1207	CKSRYB103K50
C 1208	CCSSCH5R0C50
C 1209	CCSSCH470J50
C 1213	CKSRYB104K25
C 1214	CKSRYB104K25
C 1215	CKSSYB104K10
C 1216	CSZSC470M16
C 1217	CKSRYB104K25
C 1218	CSZSC470M16
C 1221	CKSRYB104K25
C 1301	CKSSYB104K10
C 1302	CKSSYB104K10
C 1303	CKSSYB224K6R3
C 1304	CKSSYB104K10
C 1305	CKSSYB224K6R3
C 1306	CKSSYB471K50
C 1307	CKSSYB104K10
C 1308	CKSRYB224K10
C 1309	CKSSYB104K10
C 1310	CKSSYB104K10
C 1311	CKSSYB103K16
C 1312	CKSSYB103K16
C 1313	CKSSYB104K10
C 1314	CKSRYB224K10
C 1315	CKSRYB102K50
C 1316	CKSRYB393K16
C 1317	CKSSYB104K10
C 1318	CKSSYB103K16
C 1319	CKSSYB104K10
C 1320	CKSSYB103K16
C 1329	CKSSYB104K10
C 1330	CKSRYB183K25
C 1331	CCSSCH470J50
C 1332	CKSRYB224K10
C 1333	CKSRYB224K10

Circuit Symbol and No.	Part No.
C 1334	CKSRYB102K50
C 1335	CKSSYB562K25
C 1336	CKSSYB104K10
C 1337	CKSRYB102K50
C 1338	CKSRYB102K50
C 1339	CKSRYB102K50
C 1340	CKSSYB104K10
C 1341	CCSSCH101J50
C 1342	CKSRYB391K50
C 1343	CKSRYB471K50
C 1344	CKSRYB331K50
C 1346	CKSRYB224K10
C 1347	CKSSYB104K10
C 1348	CKSSYB104K10
C 1349	CKSSYB104K10
C 1350	CKSSYB104K10
C 1351	CKSSYB104K10
C 1352	CKSSYB104K10
C 1401	CCSSCH181J25
C 1402	CKSSYB104K10
C 1403	CKSSYB104K10
C 1404	CKSSYB104K10
C 1406	CKSSYB104K10
C 1501	CKSRYB224K10
C 1502	CKSRYB224K10
C 1503	CKSRYB224K10
C 1504	CKSRYB224K10
C 1505	CKSRYB224K10
C 1507	CKSRYB224K10
C 1508	CKSRYB224K10
C 1510	CSZSC101M10
C 1513	CKSRYB224K10
C 1514	CKSRYB224K10
C 1515	CKSRYB224K10
C 1516	CKSRYB224K10
C 1517	CKSRYB224K10
C 1518	CKSRYB224K10
C 1519	CKSRYB224K10
C 1520	CKSRYB224K10
C 1521	CKSRYB224K10
C 1522	CKSRYB224K10
C 1523	CKSRYB224K10
C 1524	CKSRYB224K10
C 1525	CKSSYB104K10
C 1526	CKSRYB224K10
C 1527	CKSRYB224K10
C 1528	CKSSYB104K10
C 1529	CKSRYB224K10
C 1530	CKSRYB224K10
C 1531	CKSSYB471K50
C 1532	CKSSYB104K10
C 1533	CKSSYB104K10
C 1534	CKSRYB224K10
C 1535	CKSSYB104K10
C 1538	CKSSYB104K10
C 1539	CKSRYB105K10
C 1540	CKSRYB105K10
C 1542	CKSSYB104K10
C 1543	CSZS4R7M16
C 1544	CKSSYB104K10

Circuit Symbol and No.	Part No.
C 1547	CSZSR330M10
C 1548	CKSSYB104K10
C 1549	CKSSYB104K10
C 1550	CKSSYB104K10
C 1551	CKSSYB104K10
C 1552	CKSSYB104K10
C 1554	CKSSYB104K10
C 1555	CKSSYB104K10
C 1556	CKSSYB104K10
C 1557	CKSSYB104K10
C 1558	CKSSYB104K10
C 1559	CKSSYB104K10
C 1560	CKSSYB104K10
C 1562	CKSSYB104K10
C 1563	CKSSYB104K10
C 1564	CKSSYB104K10
C 1566	CCSSCH7R0D50
C 1567	CCSSCH7R0D50
C 1605	CKSSYB471K50
C 1606	CKSSYB471K50
C 1609	CKSRYB104K16
C 1610	CKSRYB224K10
C 1611	CSZSR100M16
C 1612	CKSQYB225K10
C 1615	CCSRCH471J50
C 1616	CCSRCH471J50
C 1617	CCSRCH471J50
C 1618	CCSRCH471J50
C 1619	CKSRYB104K16
C 1641	CKSRYB104K16
C 1650	CKSYB475K16
C 1651	CKSYB475K16
C 1676	CSZSR100M10
C 1701	CKSRYB224K10
C 1702	CKSRYB224K10
C 1703	CKSRYB224K10
C 1706	CKSRYB224K10
C 1707	CKSRYB224K10
C 1708	CKSSYB471K50
C 1710	CKSRYB224K10
C 1711	CKSSYB103K16
C 1712	CKSSYB103K16
C 1713	CKSRYB224K10
C 1716	CKSRYB224K10
C 1717	CKSSYB104K10
C 1718	CKSRYB224K10
C 1719	CKSSYB104K10
C 1720	CKSRYB224K10
C 1721	CKSSYB104K10
C 1722	CKSRYB224K10
C 1723	CKSRYB224K10
C 1724	CKSSYB103K16
C 1727	CKSSYB224K6R3

E

Unit Number:CWX3024
Unit Name:Compound Unit(A)

Circuit Symbol and No.		Part No.
Q 1299	Photo-taransistor	CPT231SCTD
S 1201	Spring Switch(12cm)	CSN1069
S 1202	Spring Switch(8cm)	CSN1069
S 1203	Spring Switch(DISC SENS)	CSN1069
S 1204	Spring Switch(DISC SENS)	CSN1070
S 1205	Spring Switch(8cm)	CSN1070
R 1298		RS1/16S0R0J
R 1299		RS1/16S0R0J

F

Unit Number:CWX2753
Unit Name:Compound Unit(B)

S 1206	Switch(CLAMP)	CSN1051

M

Unit Number:CZW3087
Unit Name:Main Unit

MISCELLANEOUS

IC 3801	IC	BA00AST
IC 3802	IC	BA6247FP
IC 3803	IC	TA78L05F
IC 3804	IC	TC7S14FU
IC 3805	Photo-interrupter	GP2L24B
Q 3801	Transistor	DTC124EU
Q 3802	Transistor	2SA1037K
Q 3803	Transistor	DTC124EU
D 3801	Diode	UDZS5R6(B)
D 3802	Diode	1SS355
L 3801	Inductor	LCTA150J2520
L 3802	Inductor	LCTA150J2520

RESISTORS

R 3801	RS1/16S103J
R 3802	RS1/16S222J
R 3803	RS1/16S471J
R 3804	RS1/16S102J
R 3805	RS1/16S102J
R 3806	RS1/16S102J
R 3807	RS1/16S102J
R 3808	RS1/16S103J
R 3809	RS1/16S222J
R 3810	RS1/16S222J
R 3811	RS1/16S102J
R 3812	RS1/16S102J
R 3813	RS1/16S472J
R 3814	RS1/16S102J
R 3815	RS1/16S0R0J
R 3816	RS1/16S0R0J
R 3817	RS1/16S0R0J
R 3818	RS1/16S473J
R 3819	RS1/16S0R0J
R 3821	RS1/16S473J
R 3822	RS1/16S512J
R 3823	RS1/16S0R0J

CAPACITORS

Circuit Symbol and No.	Part No.
C 3801	CKSQYB105K16
C 3802	CKSQYB105K16
C 3803	CKSRYB104K16
C 3804	CKSRYB104K16
C 3805	CKSRYB104K16
C 3806	CKSRYB223K50
C 3807	CKSRYB223K50
C 3808	CEVW101M16
C 3809	CEVW101M16
C 3810	CKSRYB104K16
C 3811	CEV100M16
C 3812	CKSRYB104K16
C 3813	CKSRYB102K50
C 3815	CKSQYB104K50
C 3819	CEVW101M16

N

Unit Number:CZW3088
Unit Name:SW Unit

S 3831	Switch (ANGLE)	CSN1052
S 3832	Switch (LIFT)	CSN1052

O

Unit Number:CZW3089
Unit Name:Volume Unit

VR3841	Rotary (Angle sense)	CCW1025

Miscellaneous Parts List

	Pickup Unit(Service)(DP5)	CXX1639
M 1	Motor Unit(LOADING)	CXB8687
M 2	Motor Unit(CARRIAGE)	CXB8688
M 3	Motor(SPINDLE)	CXM1280
M 3001	Motor Unit(Position)	CXB9515
M 3002	Motor Unit(Angle)	CXB9516
	Fan Motor	CXM1284
	Fan Motor	CXM1289
	Fan Motor	CXM1293
	LCD Panel	CWX3056
	LCD	CAW1828

6. ADJUSTMENT

6.1 JIG CONNECTION DIAGRAM

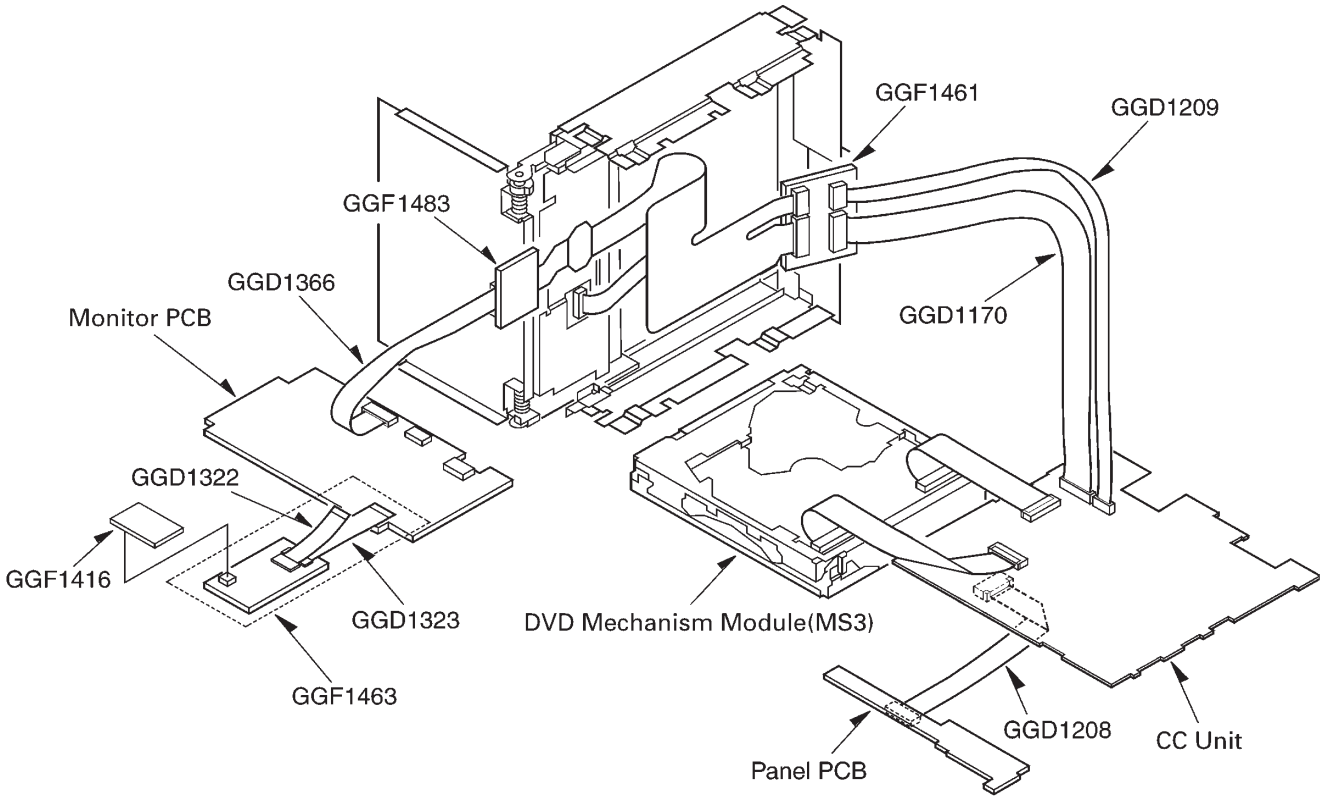

*1) After connecting the Hideaway Unit, please perform adjustment.

● **JIG's List**

Function	Name	Jig No.
CC Unit (CN609) <--> Main Unit (CN3801)	PCB	GGF1461
CC Unit (CN609) <--> GGF1461	40P FFC	GGD1170
CC Unit (CN609) <--> GGF1461	20P FFC	GGD1209
CC Unit (CN608) <--> Monitor PCB (CN4002)	PCB	GGF1483
CC Unit (CN2701) <--> Panel PCB (CN5901)	18P FFC	GGD1208
Monitor PCB (CN4002) <--> GGF1483	36P FFC	GGD1366
Monitor Adjustment PCB (*2)	PCB	GGF1416
JIG connector Assy (*2)	PCB and FFC	GGF1463
Monitor PCB ("FOR SERVICE" 14P terminal) <--> GGF1463 (*2)	14P FFC	GGD1323
TEST DISC (Operation check)	CD-ROM or DVD-ROM	GGV1137

*2) Since this product does not have OSD IC, OSD for adjustment is displayed by using GGF1416 and GGF1463 at the time of monitor adjustment. As you will find lands for 14 pins with 0.8mm pitch at the left top part of the monitor board, directly solder a flexible PCB of GGD1323 for adjustment. As GGD1322 is not used, be careful not to short the terminal.

6.2 DVD ADJUSTMENT

1) Precautions

This product uses 5V and 3.3V as standard voltages. The electrical potential that is the reference for signals, is not GND, but VREF (approximately 2.2V) and VHALF (approximately 1.65V).

During product adjustments, if the reference voltage is mistakenly taken as GND, and a grounding contact is made, not only would it be impossible to measure the accurate electrical potential, but also the servo motor would malfunction, resulting in the application of a strong impact on the pick up. The following precautionary measures should be strictly adhered to, in order to avoid such problems.

The reference voltage and GND should not be confused when using the minus probe of a measurement device. When an oscilloscope is being used special care should be taken to make sure that the reference voltage is not connected to the probe of ch1 (on the minus side), while the probe of ch2 (on the minus side), is connected to GND. Further, since the body frame of most measurement devices have the same electrical potential as the minus side of the probe, the body frame of the measurement device should be set to floating ground.

If the reference voltage is connected to GND by mistake, turn the regulator OFF immediately, or turn the power OFF.

- Remove the filters and wires used for measurements only after the regulator has been turned OFF.
- After the power supply is turned on, regulator ON the following adjustment and measurement are promptly done.
- Whenever the product is in the test mode, the software will not take any protective action. For this reason, special care should be taken to make sure that no mechanical or electrical shock could be applied to the product when taking measurements in the test mode.
- Whenever the EJECT key is pressed to eject the disk, no other keys, other than the EJECT key, should be pressed until the disk eject action has been completed.
- Press the EJECT key only after the disk has stopped completely.
- If the product hangs up turn the power OFF immediately.
- Laser didoes may be damaged, if the volume switch for the laser power adjustment of the pick up unit, is turned.

Attention)

- Test mode starting procedure
  Please select "MS3 check" (page 230) to start test mode.

(Additional Information)

IP-BUS slave unit (i.e. Multi-CD changer) test mode starting procedure.

- To enter the test mode

While pressing the SOURCE and ANGLE- keys at the same time, reset.

- Key Assign table

AVIC-N1/UC or AVIC-X1/EW	MAIN UNIT KEY (6 keys type)
UP	UP
DOWN	DOWN
LEFT	LEFT
RIGHT	RIGHT
BAND	BAND
REAR	1
WIDE	2
ENT	3
ANGLE-	4
ANGLE+	5
EQ	6

* Refer to service manual for adjustment of the slave unit.

● Front-End test mode flow chart

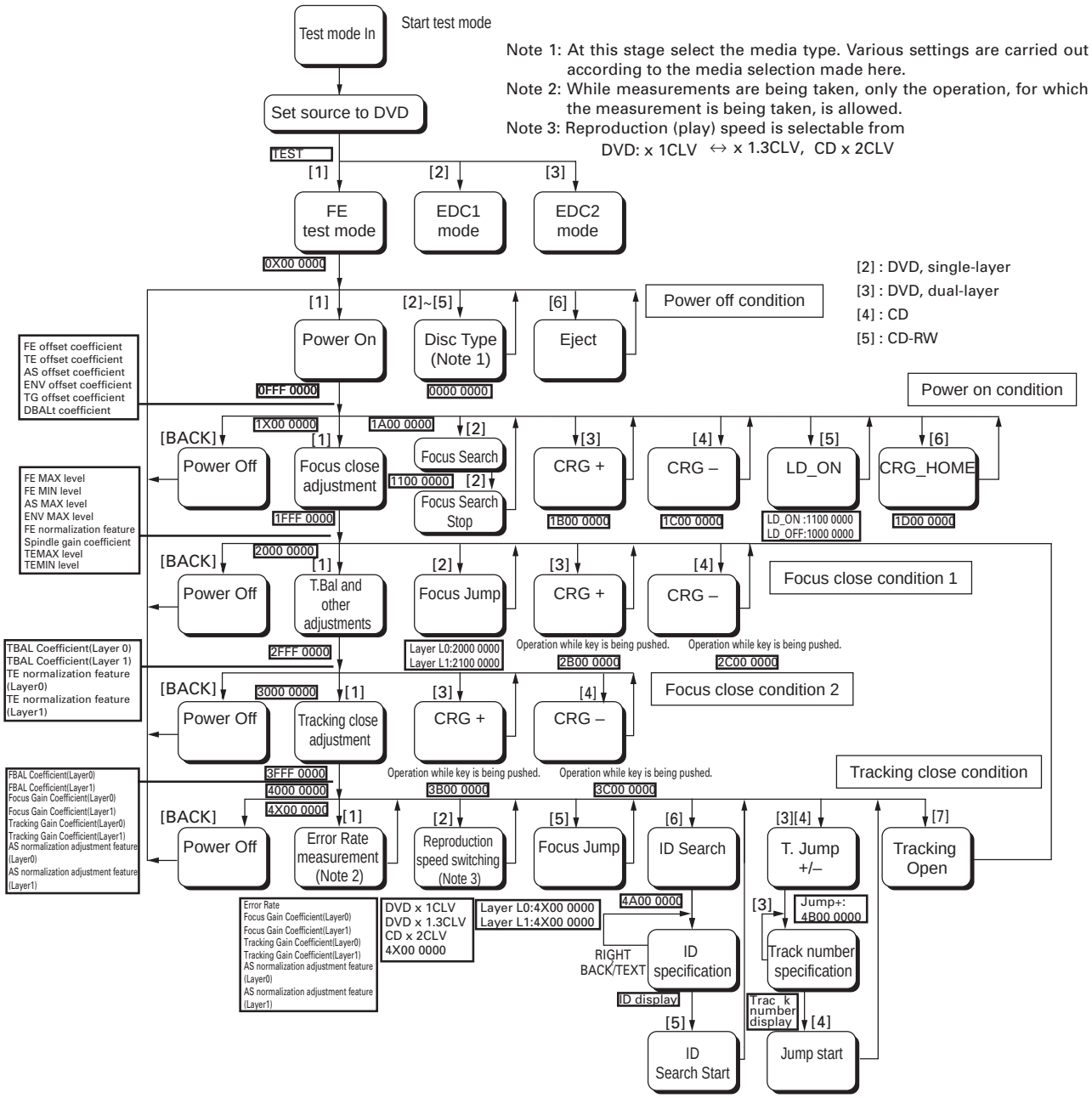

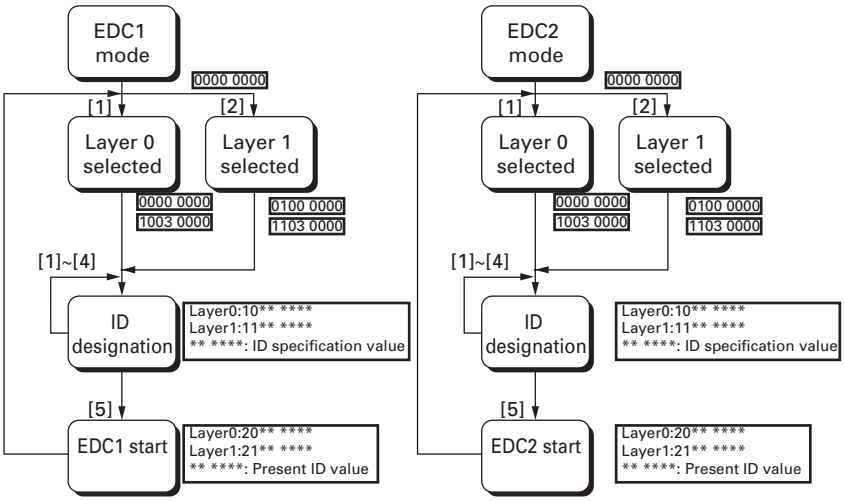

F-close and F-search cannot be executed, unless LD-ON is set.
[If F-close isn't executed within 9 seconds after LD-ON,
it switches to LD-OFF automatically. And even if F-search is executed
within 9 seconds after LD-ON, it also switches to LD-OFF.]

The track number designation is selected from the track numbers already prepared for selection.
Switching to cyclic operation is made at step REAR, and the decision is finalized (entered) in step BACK/TEXT.

For CD: Tracks 1, 4, 10, 11 and 32.

For DVD: Tracks 1, 4, 10, 11, 32, 64 and 100.

Method for designating an ID address:

- A number of digits are determined through commands RIGHTand LEFT. Numerical UP/DOWN operations are performed through commands REAR and BACK/TEXT. The decision is finalized (entered) with command ATT.

OSD display

Error Code List

Error status from DVD micurocomputer	Contents	Display
0X50	Mecha. error	No dislay
0X40	No disc	No dislay
0X30	The temperature is abnormal	Thermal Protection in Motion
0X20	Read error	Error-02-XX
0XE2	Non-playable disc	NON-PLAYABLE DISC
0X90	Drrerent region disc	DFFERENT REGION DISC
0XFF	Undefined error	Error-FF

Error code of read error(Part of XX)

Error Code	Contents	Display
0X99	Data cannot read	Please condirm the disc
0X80	The address cannot be found	Please condirm the disc
0X90	Focus error	Please condirm the disc
0X91	Spindle lock NG	DVD is stopping because mechanism detected abnormality
0X92	Carrige home NG	DVD is stopping because mechanism detected abnormality
0X93	FOK error	Please condirm the disc
0X94	ID/Subcode cannot be read	Please condirm the disc
0X95	High spindle rotation	Please condirm the disc
0X96	Row spindle rotation	DVD is stopping because mechanism detected abnormality
0X98	TOC cannot be found	Please condirm the disc
0X9A	AV chip error	DVD is stopping because mechanism detected abnormality
0X9B	RecaveryNG(BE)	DVD is stopping because mechanism detected abnormality

● Skew adjustment

If any of the following replacements have been performed on the system, adjustments for pick up, must be conducted:

1. Pick up unit replacement
2. Spindle motor replacement
3. Carriage chassis replacement
4. Pick up unit main shaft replacement
5. Pick up unit sub-shaft replacement

Measurement device and tools : Oscilloscope
Allen key wrench
40-pin flexible extension
Screw rock(GYL1001)

Disk used : GGV1018
Measurement reference : GND1
Measurement point : RFOUT

Skew adjustment connection diagram

• DVD core unit (MS3)

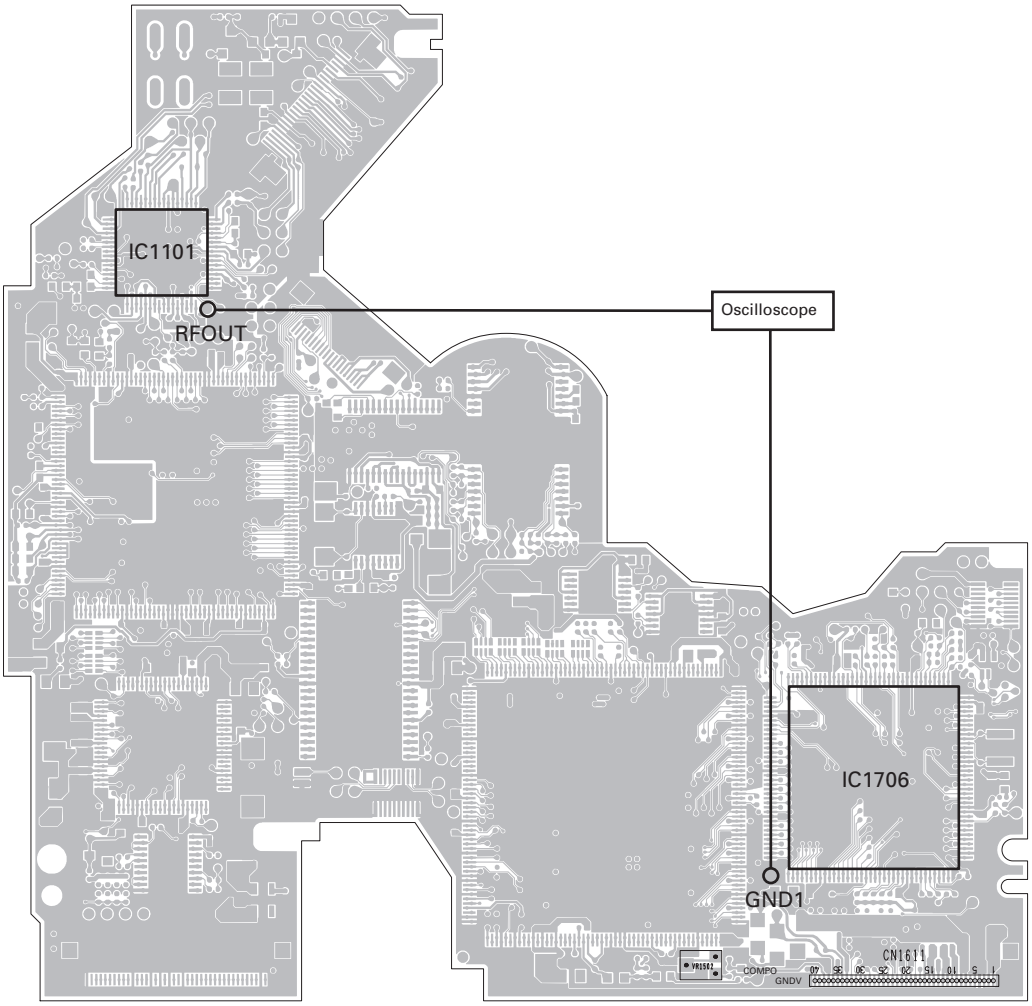

Symptoms in case of poor adjustment: Error efficiency deteriorated: 10-3 (Optimum value: 10-4 or lower)
High jitter of the RF signal
RF waveform deformed
Unstable operation in tracking closing and servo control

Caution: Avoid exposing your eyes to laser beams for a long time.

Preparation for adjustment: Clean both ends of the shafts.
Use brand new skew screws supplied with the service kit GXX1234.

Procedures:

1. Place the DVD mechanism module upside down.
2. After replacing the pickup (by referring to the procedures of “Removing the Pickup.”), roughly adjust the three skew screws through visual check so that the pickup is mounted in parallel to the CRG chassis around the inner and outer tracks.
3. Connect an oscilloscope as shown in the connecting diagram.
4. Turn on the power of the product. Load the test disc (GGV1018).
5. In the front-end test mode, set the disc type to DVD layer 1. Move the pickup toward the inner tracks.
6. Turn on the laser diodes.
7. With the focus servo closed, complete all automatic adjustments. Close the tracking servo, and then complete all automatic adjustments.
8. Observing the RF waveform on the oscilloscope, slightly turn the skew adj. screw C to maximize the RF level. Next, move the pickup toward the outer tracks. Slightly turn the skew adj. screw B to maximize the RF level. Turn the skew adj. screws A and B in the same direction keeping their rotating angles the same until the RF level becomes the maximum.
   Lastly, move the pickup toward the inner tracks. Turn the skew adj. screw C so that the RF level becomes the maximum.
   Repeat the step 8 three times.
9. Turn off the power in the test mode. After confirming that the disc has stopped, eject the disc.
10. Apply glue to the skew adj. screws and the shafts.

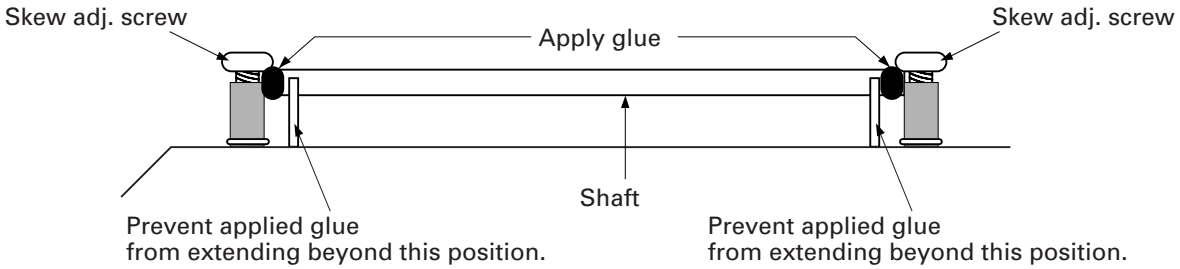

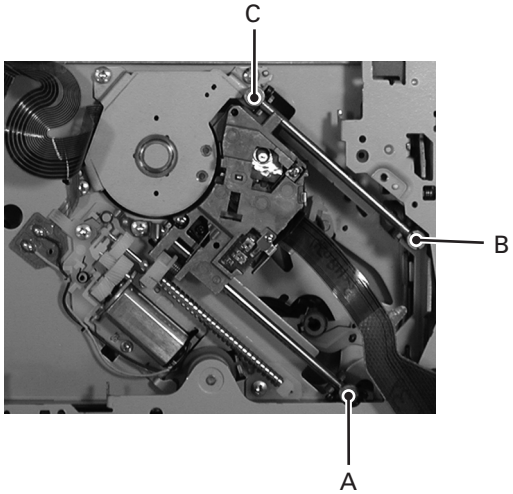

● Back end section check flow chart

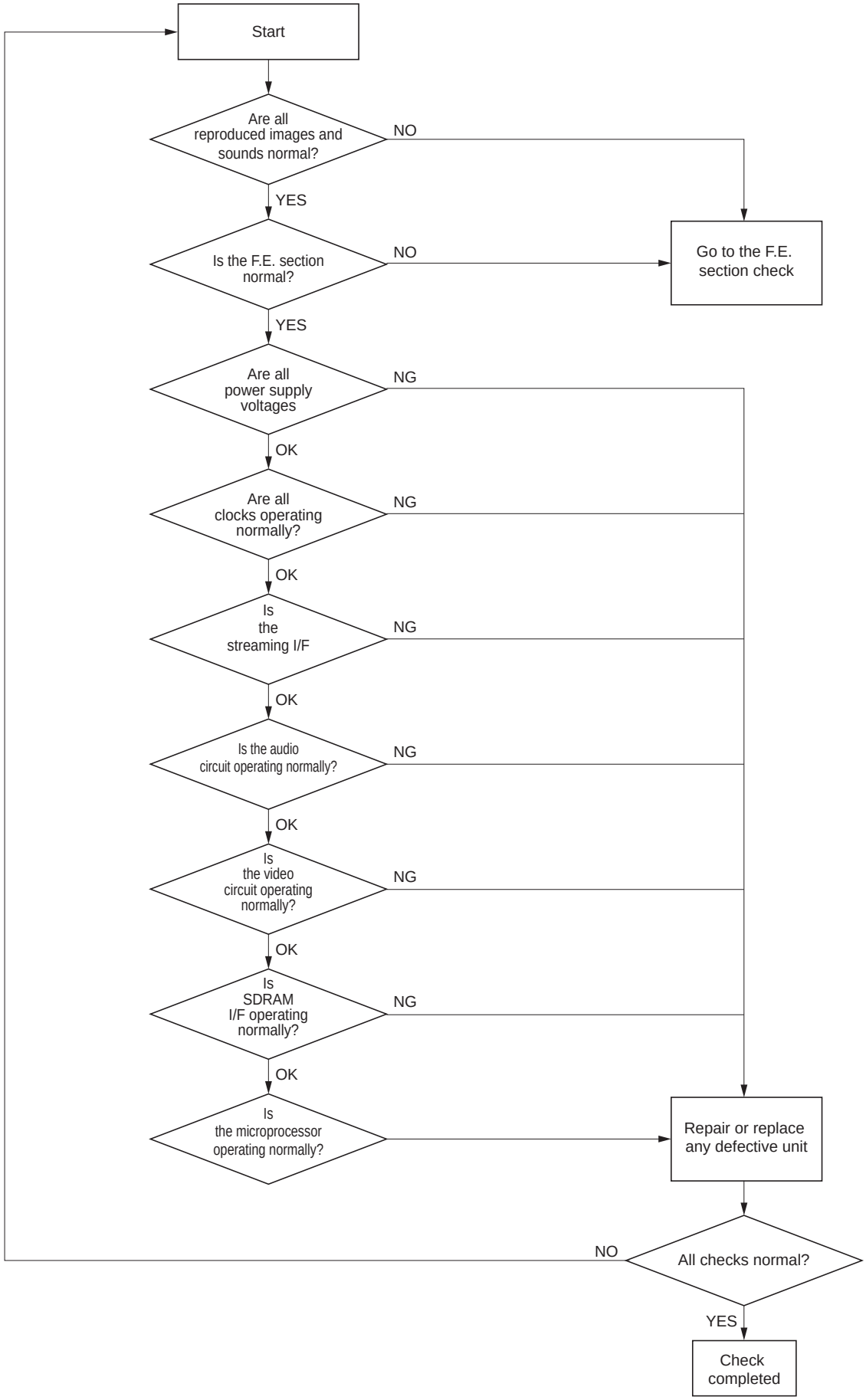

Check 1: Are all power supply voltages normal?

Reproduce DVD-REF-A1 Title 1.

Verify the voltage of the sensing pin.

If results are not satisfactory, check to see if there are any problems with the resin flux cored solder, parts and components.

NO.	Verification location	Rated value	Unit
1	VD8-PGND	8±0.4	V
2	VD33-GND	3.3±0.3	V
3	SRVDD33-GND	3.3±0.3	V
4	VCC5-GND	5±0.25	V
5	AVCC5-GND	5±0.3	V
6	VCC33-GND	3.3±0.15	V
7	VCC18-GND	1.8±0.15	V
8	VCC25-GND	2.5±0.2	V

Check 2: Are all clocks operating normally?

Reproduce DVD-REF-A1 Title 1.

Checks are to be conducted with a GND reference.

If locations listed under "verification location 2", can be verified, there will be no need to perform verifications for the locations listed under "verification location 1."

If the result is not satisfactory, check to see if there are any problems with the resin flux cored solder, parts and components, in the vicinity of IC1507.

NO.	Verification location 1 (contact measurements)	Verification location 2	Media	Rated value1	Rated value 2	Rated value 3
1	CLK27	IC1503 96pin	ALL	2.65V~VCC33	GND~0.65V	27MHz±50ppm
2	EXTCK1	IC1503 100pin	DVD	2.65V~VCC33	GND~0.65V	36.8640MHz±100ppm
3	EXTCK1	IC1503 100pin	CD	2.65V~VCC33	GND~0.65V	33.8688MHz±100ppm
4	MCK16	IC1301 79pin	ALL	2.33~VCC33	GND~0.99V	16.9344MHz±100ppm
5	MCK33	IC1601 3,33pin	ALL	2.33~VCC33	GND~0.10V	33.8688MHz~40.0000MHz

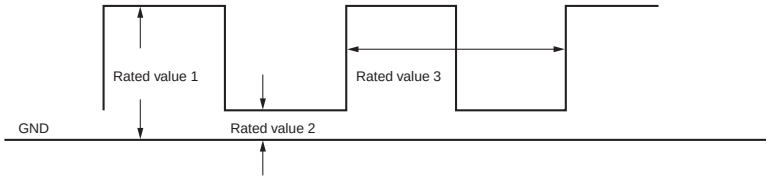

Clock rated values

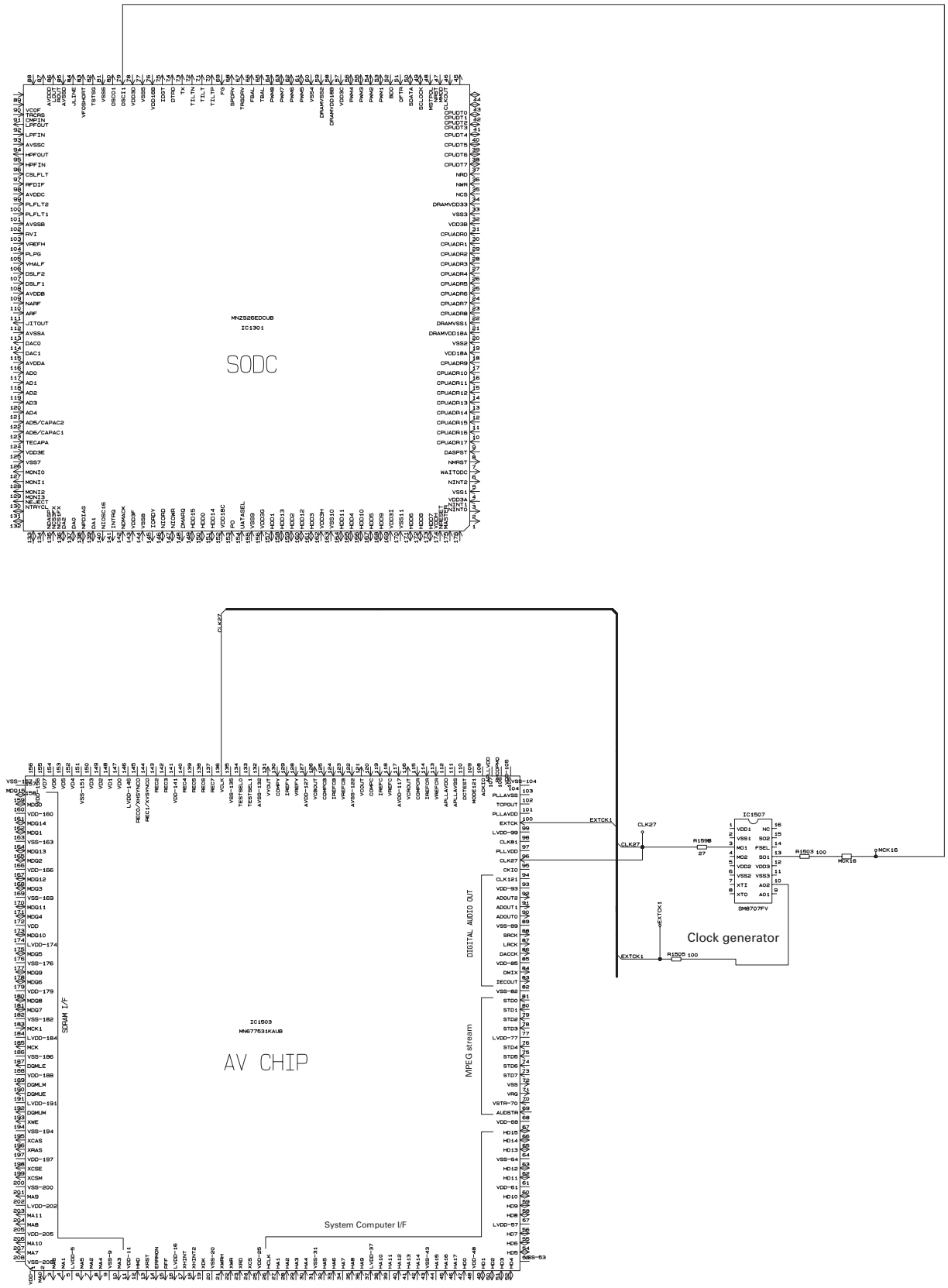
SODC
IC1301
AV CHIP
IC1503
MN677531KAUB
SDRAM I/F
DIGITAL AUDIO OUT
MPEG stream
System Computer I/F
Clock generator
IC1507
SM8707FV
CLK27
EXTCK1
MCK16
R1598
R1503
R1505

Check 3: Is the streaming I/F operating normally?

Reproduce DVD-REF-A1 Title 1.

Checks are to be conducted with a GND reference.

If the locations listed under "verification location 2" can be verified, then there is no need to conduct verifications for the locations listed under "verification location 1."

If the result is not satisfactory, check to see if there are any problems with the resin flux cored solder, parts and components, in areas where a problem occurs, for the overall sequence of"output "input"of the checked location.

NO.	Verification location 1 (contact measurements)	Verification location2	Verification Media	Rated value 1	Rated value 2	Reference waveform	Others
1	STD0	IC1503 81pin	DVD	2V~VCC33	GND~0.8V	Waveform 1	Line name OHDD8 at R1425
2	STD1	IC1503 80pin	DVD	2V~VCC33	GND~0.8V	Waveform 1	Line name OHDD9 at R1425
3	STD2	IC1503 79pin	DVD	2V~VCC33	GND~0.8V	Waveform 1	Line name OHDD10 at R1425
4	STD3	IC1503 78pin	DVD	2V~VCC33	GND~0.8V	Waveform 1	Line name OHDD11 at R1425
5	STD4	IC1503 76pin	DVD	2V~VCC33	GND~0.8V	Waveform 1	Line name OHDD12 at R1426
6	STD5	IC1503 75pin	DVD	2V~VCC33	GND~0.8V	Waveform 1	Line name OHDD13 at R1426
7	STD6	IC1503 74pin	DVD	2V~VCC33	GND~0.8V	Waveform 1	Line name OHDD14 at R1426
8	STD7	IC1503 73pin	DVD	2V~VCC33	GND~0.8V	Waveform 1	Line name OHDD15 at R1426
9	STCLK	IC1503 70pin	DVD	2V~VCC33	GND~0.8V	Waveform 2	Line name ODA2 at IC1405
10	STVALID	IC1503 69pin	DVD	2V~VCC33	GND~0.8V	Waveform 2	Line name OINTRQ at IC1405
11	MASTER	IC1301 176pin	DVD	2V~VCC33	GND~0.8V	Waveform 2	Line name STENABLE at IC1405

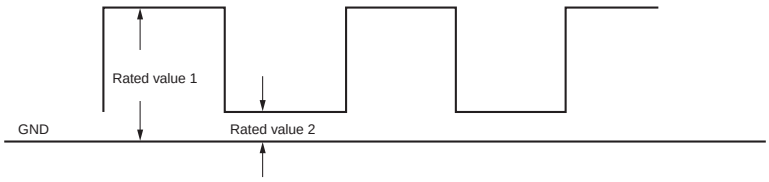

Streaming I/F rated value

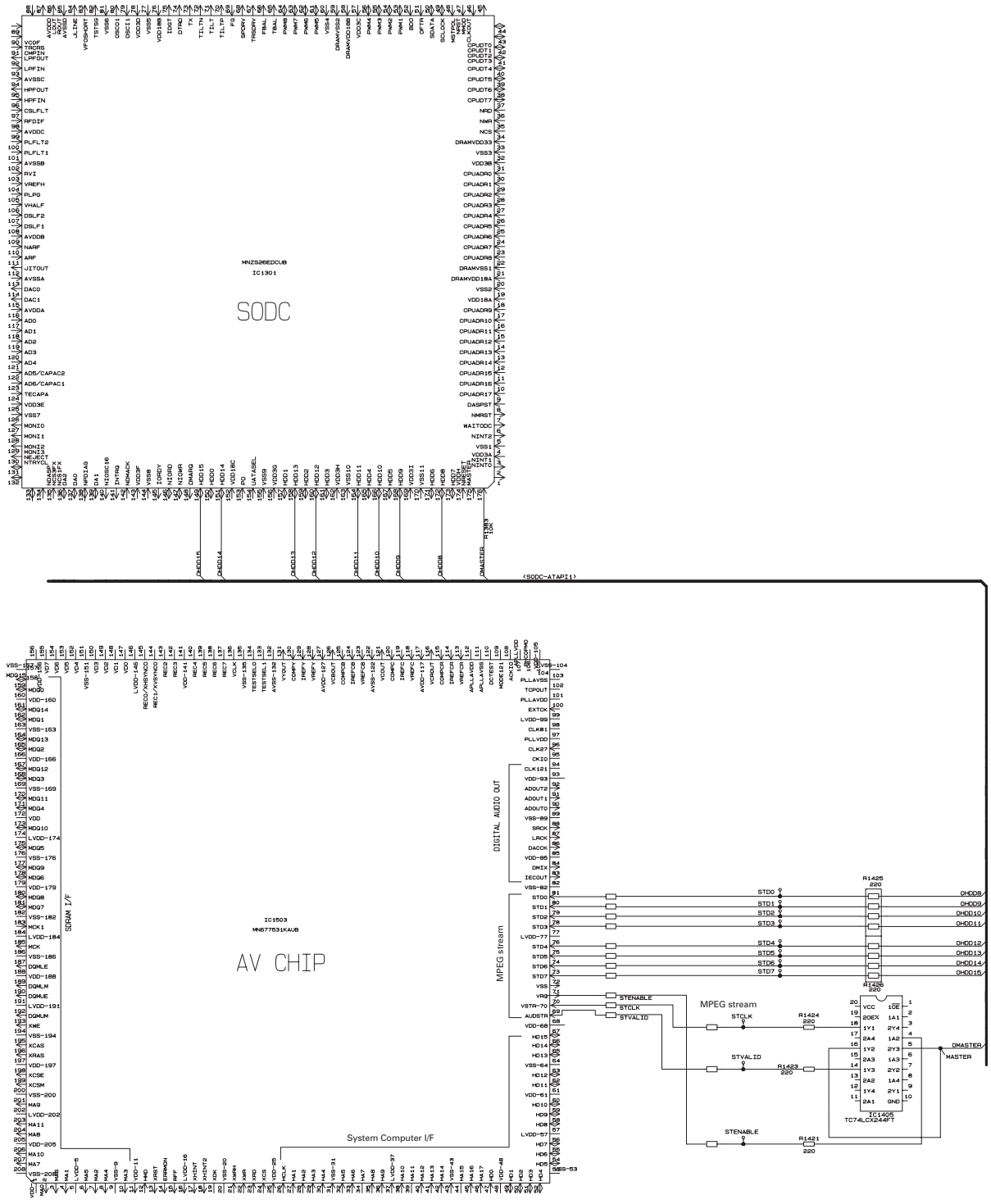
SODC
IC1301
MNZS26EDCUB
AV CHIP
IC1503
MN677531KAUB
SDRAM I/F
DIGITAL AUDIO OUT
MPEG stream
System Computer I/F
IC1405
TC74LCX244FT
R1425
R1426
R1424
R1423
R1421
220
STENABLE
STCLK
STVALID
MASTER
<SODC-ATAPI1>

Check 4: Is the audio circuit operating normally?

Reproduce DVD-REF-A1 Title 2 Chapter (48V/16-bit/1 kHz/0dB). Verify the circuit described in Figure 2.
Checks are to be conducted using GNDAU1 (sensing pins) as a reference.
If the locations, listed under "verification location 2", can be verified, there is no need to conduct verifications for the locations listed under "verification location 1."
If the result is not satisfactory, check to see if there are any problems with the resin flux cored solder, parts and components, in the vicinity of the main components.

NO.	Verification location 1	Verification location 2	Rated value 1	Rated value 2	Reference waveform
1	AOUT0	IC1503 90pin	2.0V and over	0.8V and lower	Waveform 3
2	SRCK	IC1605 1pin	2.0V and over	0.8V and lower	Waveform 3
3	LRCK	IC1605 3pin	2.0V and over	0.8V and lower	Waveform 3

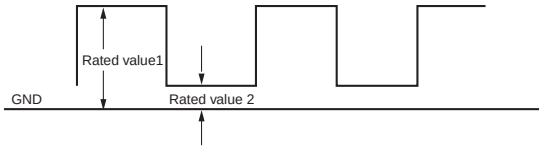

Three serial output rated values

Checks are conducted with the measurement circuit below.

NO.	Verification location 1	Verification location 2	Rated value	Reference waveform
4	LO	CN1611 36pin	1100±150mV	Waveform 4
5	RO	CN1611 34pin	1100±150mV	Waveform 4

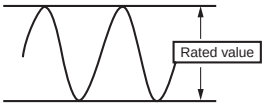

Analog audio outputs (LO and RO) rated values

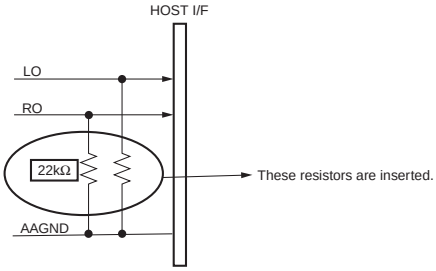

LO and RO output measurement circuit

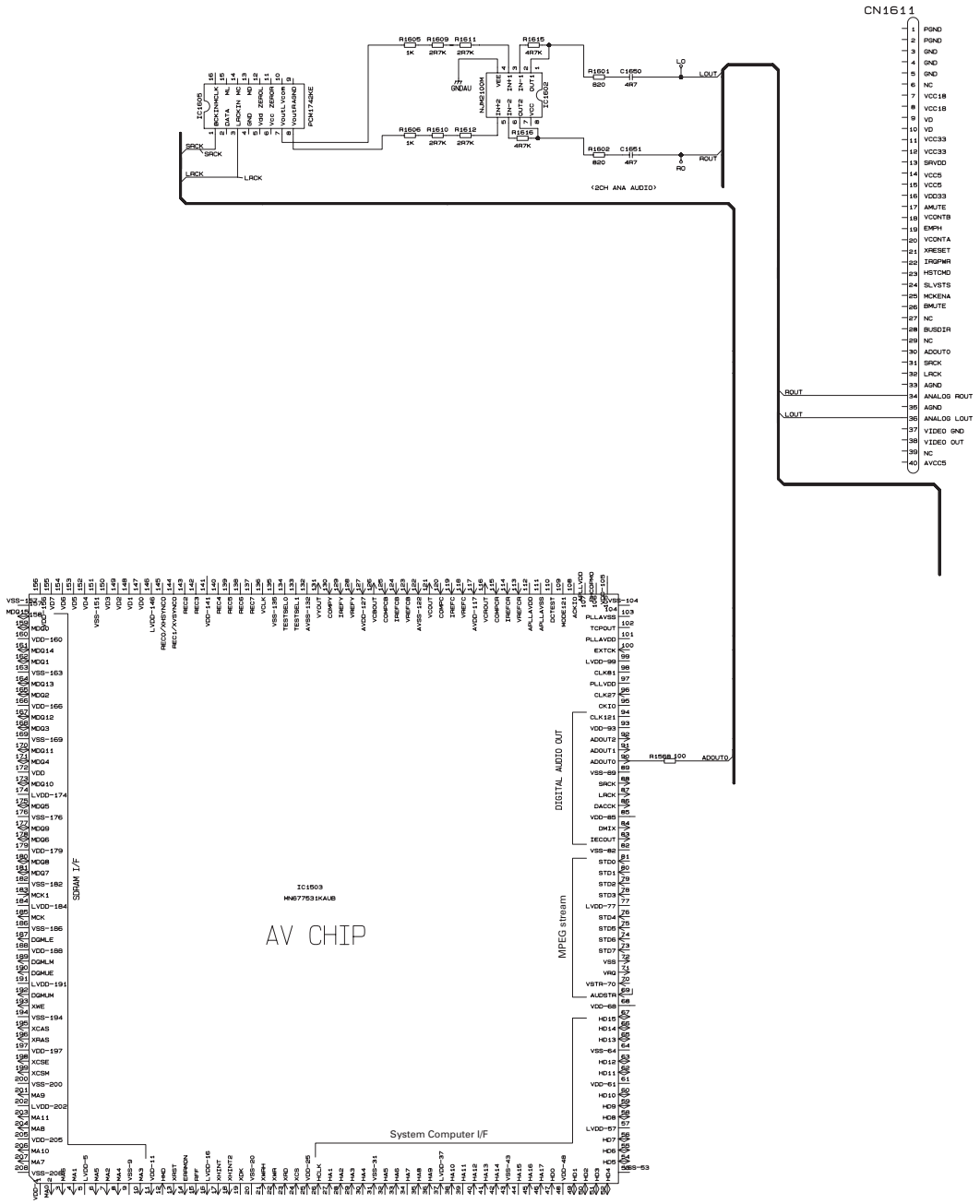
CN1611
IC1605
PCM1742RE
IC1602
(2CH ANA AUDIO)
IC1503
MN677531KAUB
AV CHIP
SDRAM I/F
DIGITAL AUDIO OUT
MPEG stream
System Computer I/F

Check 5: Is the video circuit operated normally?

Reproduce DVD-REF-A1 Title 2 Chapters (White 100IRE).
Monitor the output with the oscilloscope, by setting the COMPO signal to a GND reference.
Set the Trigger mode to the TV trigger, and the Trigger line to line-150.

NO.	Verification location (sensing pin)	Rated value	Reference waveform
1	COMPO	1.0±0.05Vpp	Waveform 5

If the result is not satisfactory, check to see if there are any problems with resin flux cored solder, parts and components, in the vicinity of line-150 (the section marked ⑤ in the circuit diagram) and peripheral components.

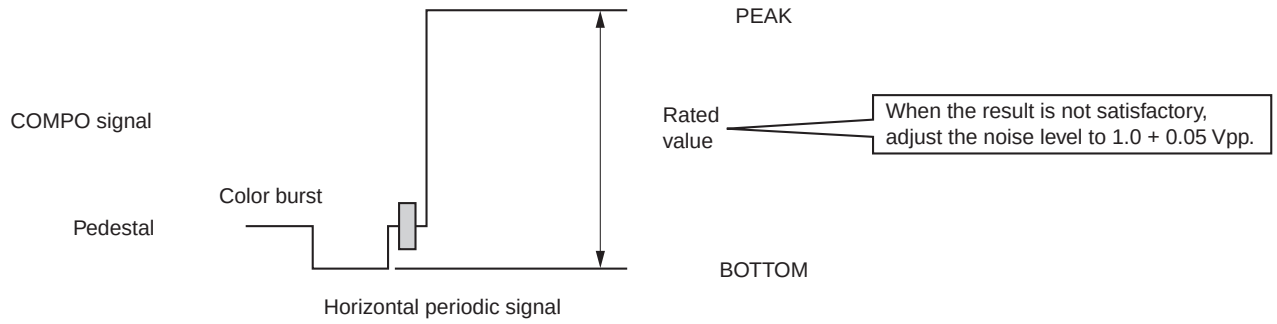

Composite signal 100% output waveform

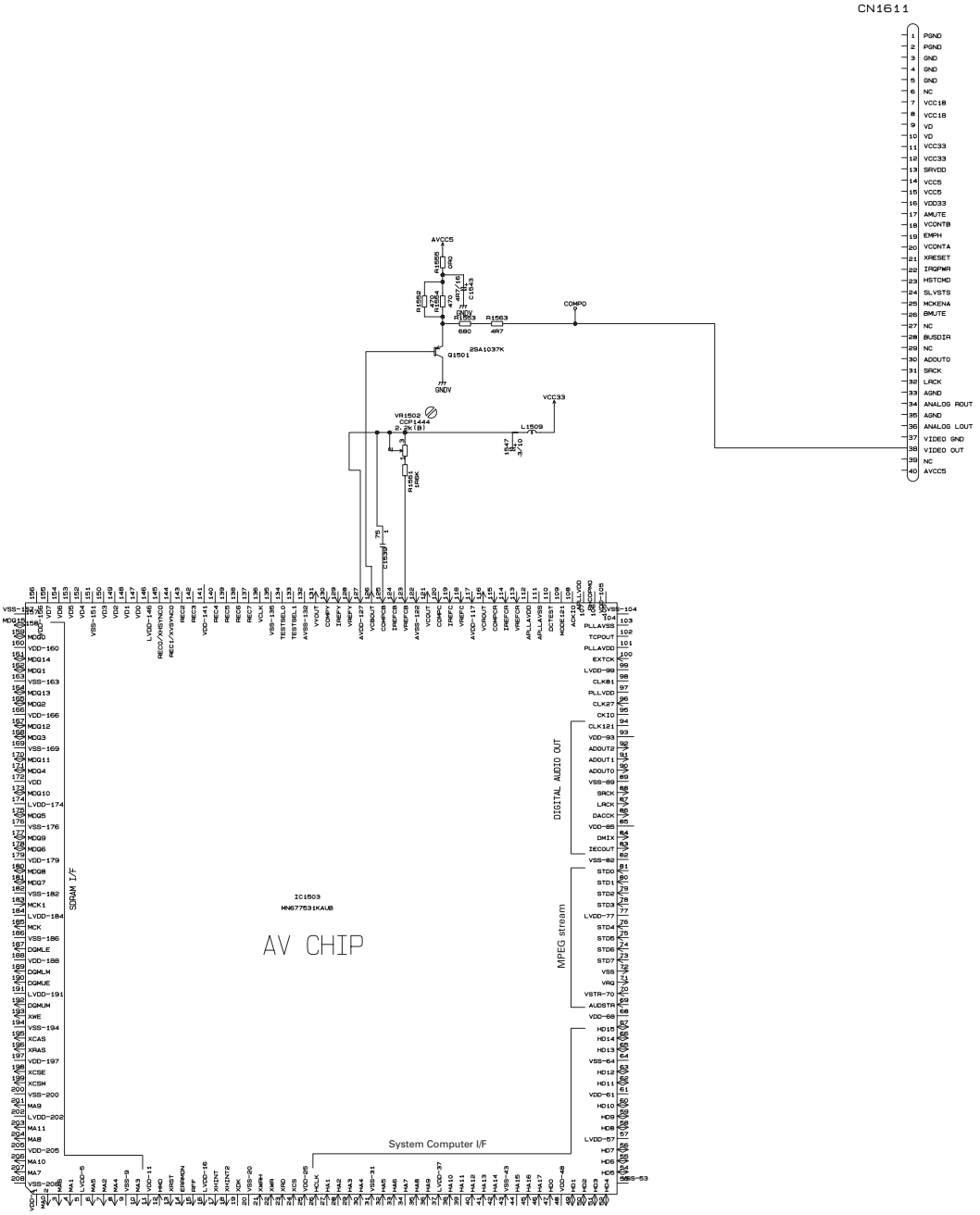
CN1611
AV CHIP
IC1503
MN677531KAUB
SDRAM I/F
DIGITAL AUDIO OUT
MPEG stream
System Computer I/F
AVCC5
COMPO
VCC33
Q1501
2SA1037K
VR1502
CCP1444
2.2K(B)
R1563
4R7
R1562
680
L1509
15uH
3.10
R1562
150K
C1539
75
1
GND

Check 6: Is SDRAM I/F operating normally?

Reproduce DVD-REF-A1 Title 1.
Check the conductivity of both the "Verification location 1" and the "Verification location2."
If the result is not satisfactory, check to see if there are any problems with the resin flux cored solder, parts and components, in areas where a problem occurs, for the overall sequence of "output "input" of the checked location.

NO.	Signal name	Verification location 1	Verification location 2	Rated value
1	MA0	IC1501 23pin	IC1503 2pin	22Ω ± 5%
2	MA1	IC1501 24pin	IC1503 4pin	22Ω ± 5%
3	MA2	IC1501 25pin	IC1503 7pin	22Ω ± 5%
4	MA3	IC1501 26pin	IC1503 10pin	22Ω ± 5%
5	MA4	IC1501 29pin	IC1503 8pin	22Ω ± 5%
6	MA5	IC1501 30pin	IC1503 6pin	22Ω ± 5%
7	MA6	IC1501 31pin	IC1503 3pin	22Ω ± 5%
8	MA7	IC1501 32pin	IC1503 207pin	22Ω ± 5%
9	MA8	IC1501 33pin	IC1503 204pin	22Ω ± 5%
10	MA9	IC1501 34pin	IC1503 201pin	22Ω ± 5%
11	MA10	IC1501 22pin	IC1503 206pin	22Ω ± 5%
12	MA11	IC1501 20pin	IC1503 203pin	22Ω ± 5%
13	MDQ0	IC1501 2pin	IC1503 159pin	22Ω ± 5%
14	MDQ1	IC1501 4pin	IC1503 162pin	22Ω ± 5%
15	MDQ2	IC1501 5pin	IC1503 165pin	22Ω ± 5%
16	MDQ3	IC1501 7pin	IC1503 168pin	22Ω ± 5%
17	MDQ4	IC1501 8pin	IC1503 171pin	22Ω ± 5%
18	MDQ5	IC1501 10pin	IC1503 175pin	22Ω ± 5%
19	MDQ6	IC1501 11pin	IC1503 178pin	22Ω ± 5%
20	MDQ7	IC1501 13pin	IC1503 181pin	22Ω ± 5%
21	MDQ8	IC1501 42pin	IC1503 180pin	22Ω ± 5%
22	MDQ9	IC1501 44pin	IC1503 177pin	22Ω ± 5%
23	MDQ10	IC1501 45pin	IC1503 173pin	22Ω ± 5%
24	MDQ11	IC1501 47pin	IC1503 170pin	22Ω ± 5%
25	MDQ12	IC1501 48pin	IC1503 167pin	22Ω ± 5%
26	MDQ13	IC1501 50pin	IC1503 164pin	22Ω ± 5%
27	MDQ14	IC1501 51pin	IC1503 161pin	22Ω ± 5%
28	MDQ15	IC1501 53pin	IC1503 158pin	22Ω ± 5%
29	MCK	IC1501 38pin	IC1503 185pin	22Ω ± 5%
30	XWE	IC1501 16pin	IC1503 193pin	22Ω ± 5%
31	XCAS	IC1501 17pin	IC1503 195pin	22Ω ± 5%
32	XRAS	IC1501 18pin	IC1503 196pin	22Ω ± 5%
33	XCSM	IC1501 19pin	IC1503 199pin	22Ω ± 5%
34	XCSE	IC1501 35pin	IC1503 198pin	22Ω ± 5%
35	DQMUM	IC1501 39pin	IC1503 192pin	22Ω ± 5%
36	DQMLM	IC1501 15pin	IC1503 189pin	22Ω ± 5%
37	DQMUE	IC1501 21pin	IC1503 190pin	22Ω ± 5%

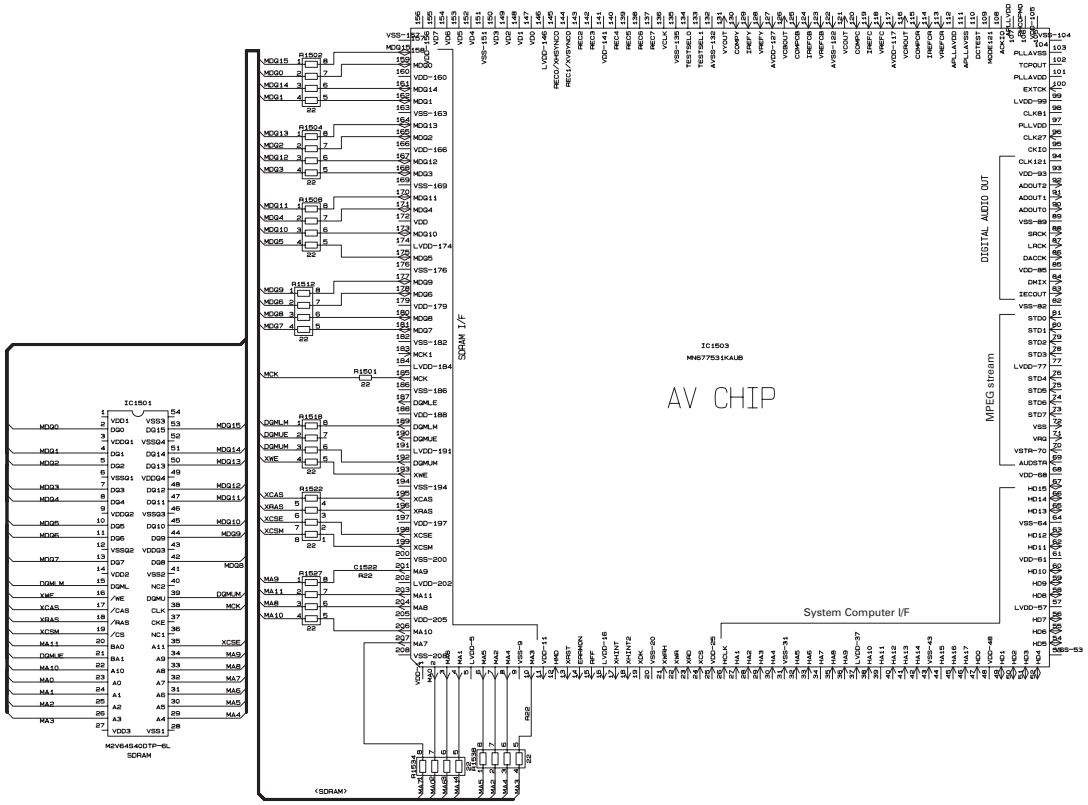
AV CHIP
IC1503
MN677531KAUB
SDRAM I/F
DIGITAL AUDIO OUT
MPEG stream
System Computer I/F
IC1501
M2V64S40DTP-6L
SDRAM
(SDRAM)

Check 7: Is the microprocessor operating normally?

Check the conductivity of both the "Verification location 1" and the "Verification location2."
If the result is not satisfactory, check to see if there are any problems with the resin flux cored solder, parts and components, in areas where a problem occurs, for the overall sequence of "output – input" of the checked location.

NO.	Signal name	Verification location 1	Verification location 2	Verification Media	Rated value	Others
1	A1	IC1701 142pin	IC1503 27pin	ALL	0Ω	
2	A2	IC1701 141pin	IC1503 28pin	ALL	0Ω	
3	A3	IC1701 140pin	IC1503 29pin	ALL	0Ω	
4	A4	IC1701 139pin	IC1503 30pin	ALL	0Ω	
5	A5	IC1701 138pin	IC1503 32pin	ALL	0Ω	
6	A6	IC1701 137pin	IC1503 33pin	ALL	0Ω	
7	A7	IC1701 136pin	IC1503 34pin	ALL	0Ω	
8	A8	IC1701 133pin	IC1503 35pin	ALL	0Ω	
9	A9	IC1701 132pin	IC1503 36pin	ALL	0Ω	
10	A10	IC1701 131pin	IC1503 38pin	ALL	0Ω	
11	A11	IC1701 130pin	IC1503 39pin	ALL	0Ω	
12	A12	IC1701 129pin	IC1503 40pin	ALL	0Ω	
13	A13	IC1701 128pin	IC1503 41pin	ALL	0Ω	
14	A14	IC1701 127pin	IC1503 42pin	ALL	0Ω	
15	A15	IC1701 126pin	IC1503 44pin	ALL	0Ω	
16	A16	IC1701 123pin	IC1503 45pin	ALL	0Ω	
17	A17	IC1701 122pin	IC1503 46pin	ALL	0Ω	
18	D0	IC1701 17pin	IC1503 47pin	ALL	0Ω	
19	D1	IC1701 16pin	IC1503 49pin	ALL	0Ω	
20	D2	IC1701 15pin	IC1503 50pin	ALL	0Ω	
21	D3	IC1701 14pin	IC1503 51pin	ALL	0Ω	
22	D4	IC1701 13pin	IC1503 52pin	ALL	0Ω	
23	D5	IC1701 12pin	IC1503 54pin	ALL	0Ω	
24	D6	IC1701 11pin	IC1503 55pin	ALL	0Ω	
25	D7	IC1701 10pin	IC1503 56pin	ALL	0Ω	
26	D8	IC1701 7pin	IC1503 58pin	ALL	0Ω	
27	D9	IC1701 6pin	IC1503 59pin	ALL	0Ω	
28	D10	IC1701 5pin	IC1503 60pin	ALL	0Ω	
29	D11	IC1701 4pin	IC1503 62pin	ALL	0Ω	
30	D12	IC1701 3pin	IC1503 63pin	ALL	0Ω	
31	D13	IC1701 2pin	IC1503 65pin	ALL	0Ω	
32	D14	IC1701 1pin	IC1503 66pin	ALL	0Ω	
33	D15	IC1701 144pin	IC1503 67pin	ALL	0Ω	
34	XCSAVR	IC1701 101pin	IC1706 1pin	ALL	0Ω	
35	XCSAVW	IC1701 100pin	IC1706 2pin	ALL	0Ω	
36	XCSAV	IC1706 4pin	IC1503 24pin	ALL	0Ω	
37	XAVINT	IC1701 42pin	IC1503 17pin	ALL	0Ω	
38	XAVINT2	IC1701 41pin	IC1503 18pin	ALL	0Ω	
39	XRD	IC1701 95pin	IC1503 23pin	ALL	0Ω	
40	CLKOUT	IC1701 90pin	IC1505 3pin	ALL	33Ω	Dividing circuitFor verification location 2, include also IC1502 pin-3
41	HCLK	IC1502 5pin	IC1503 26pin	ALL	200Ω ± 5 %	
42	XSRAMWR	IC1701 105pin	IC1505 1pin	ALL	0Ω	
43	XHWR	IC1504 8pin	IC1503 21pin	ALL	68Ω ± 5 %	

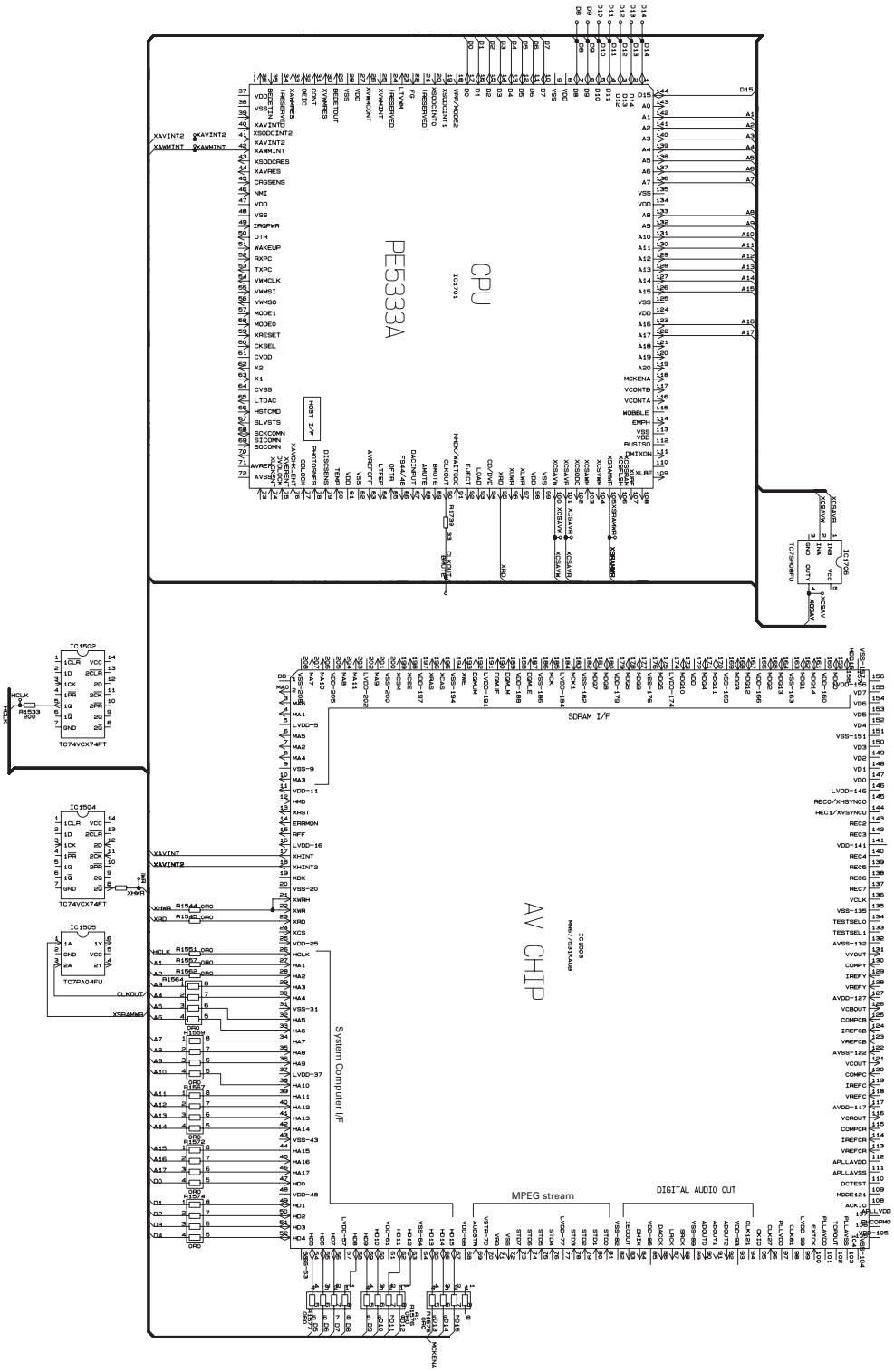
PE5333A
CPU
IC1701
HOST I/F
IC1705
TC7SH08FU
IC1502
TC74VCX74FT
IC1504
TC74VCX74FT
IC1505
TC7PA04FU
AV CHIP
IC1903
MN677931KAB
SDRAM I/F
System Computer I/F
MPEG stream
DIGITAL AUDIO OUT

Note:1 The encircled number denote measuring pointes in the circuit diagram.
2 Reference voltage VHALF : 1.65V

⑪ CH1: STD1
⑫ CH2: STD4
⑬ CH3: STD7
⑭ CH4: STENABLE
5V/div. 2μs/div.

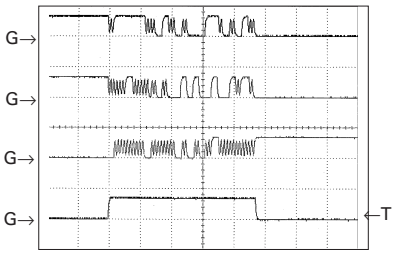

Wave 1

⑮ CH1: AVRTM
⑯ CH2: STCLK
⑰ CH3: STVALID
⑭ CH4: STENABLE
5V/div. 2μs/div.

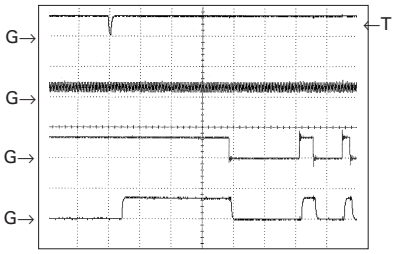

Wave 2(1)

⑮ CH1: AVRTM
⑯ CH2: STCLK
⑰ CH3: STVALID
⑭ CH4: STENABLE
5V/div. 50μs/div.

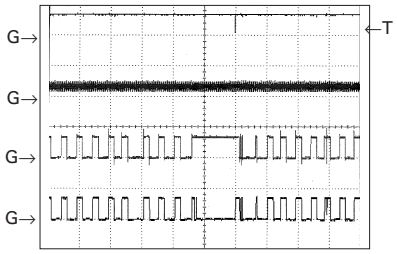

Wave 2(2)

⑱ CH1: AOUT0
⑲ CH2: SRCKAV
⑳ CH3: LRCKAV
2V/div. 2μs/div.

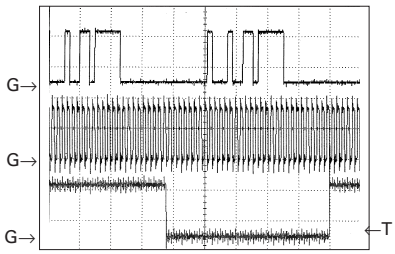

Wave 3

㉒ CH1: LO
㉓ CH2: RO
1V/div. 500μs/div.

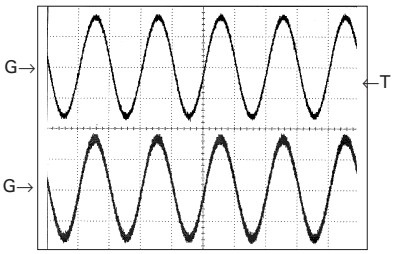

Wave 4

㉔ CH1: COMPO 200mV/div. 10μs/div.
[White 100% output]

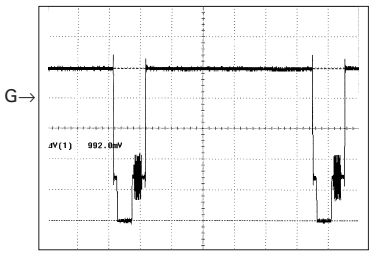

Wave 5

6.3 CC UNIT ADJUSTMENT

● **Adjustment point**

CC UNIT(SIDE A)

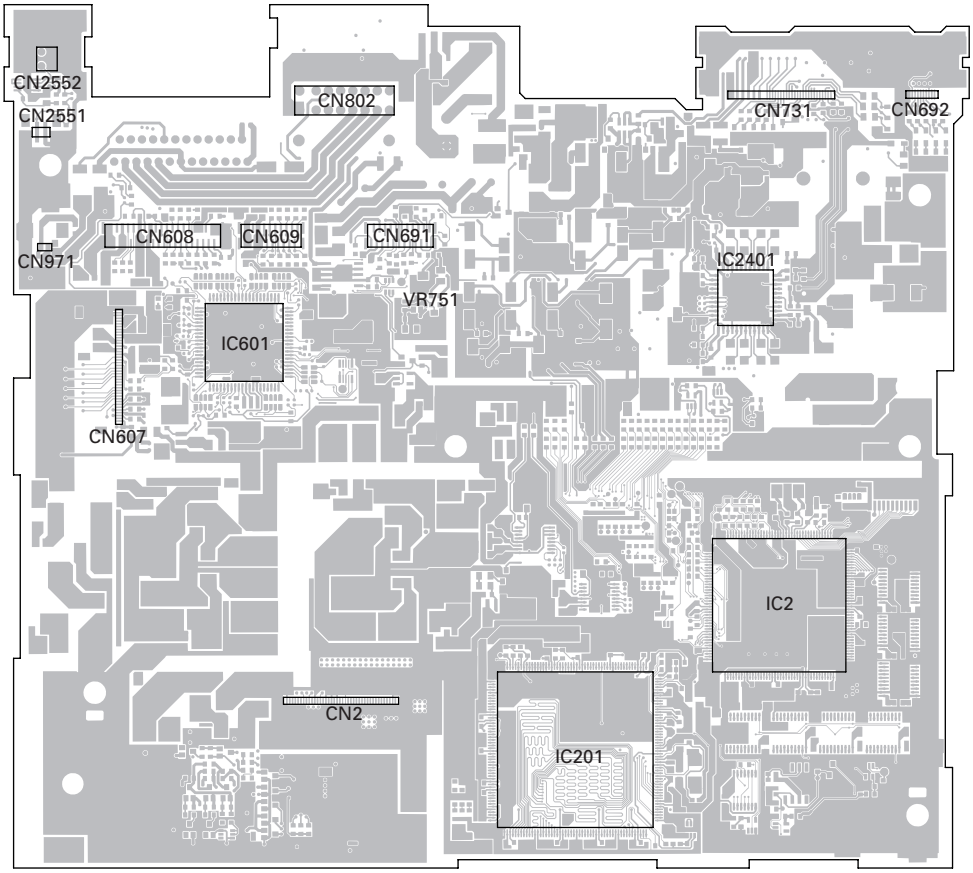

CC UNIT(SIDE B)

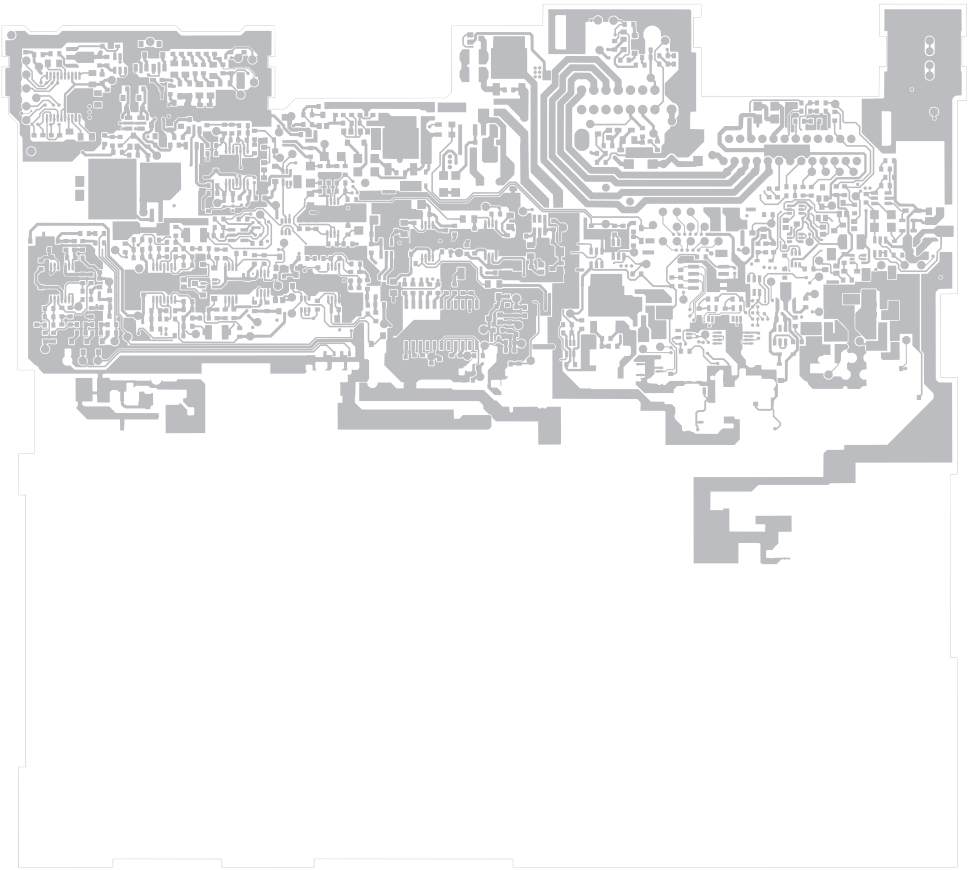

Step	Adjustment item	Mode	Input (input test pin,specs, other conditions)	Output (measuring point, waveform)	Measuring instruments	Specs	Adjusting point
1	Main video level	VTR	Input test pin : DVDVO Signal : 100IRE(white 100%) Level : 1.0Vp-p(via 75Ω)	Measuring point : FMONV 	Oscilloscope	1.50 ± 0.05Vp-p Measure between the sync tip and 100IRE (top level). The 12kΩ terminal on the measuring instrument.	VR751

6.4 MOTHER PCB ADJUSTMENT

● **Adjustment point**

MOTHER PCB(SIDE A)

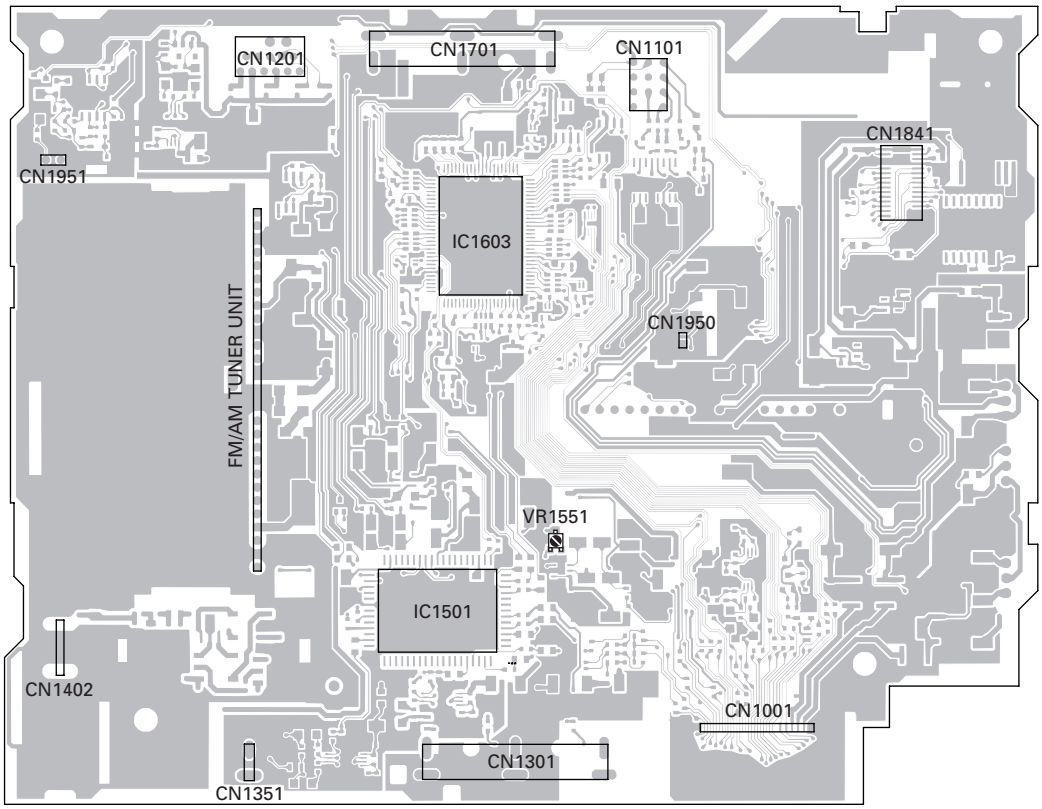

MOTHER PCB(SIDE B)

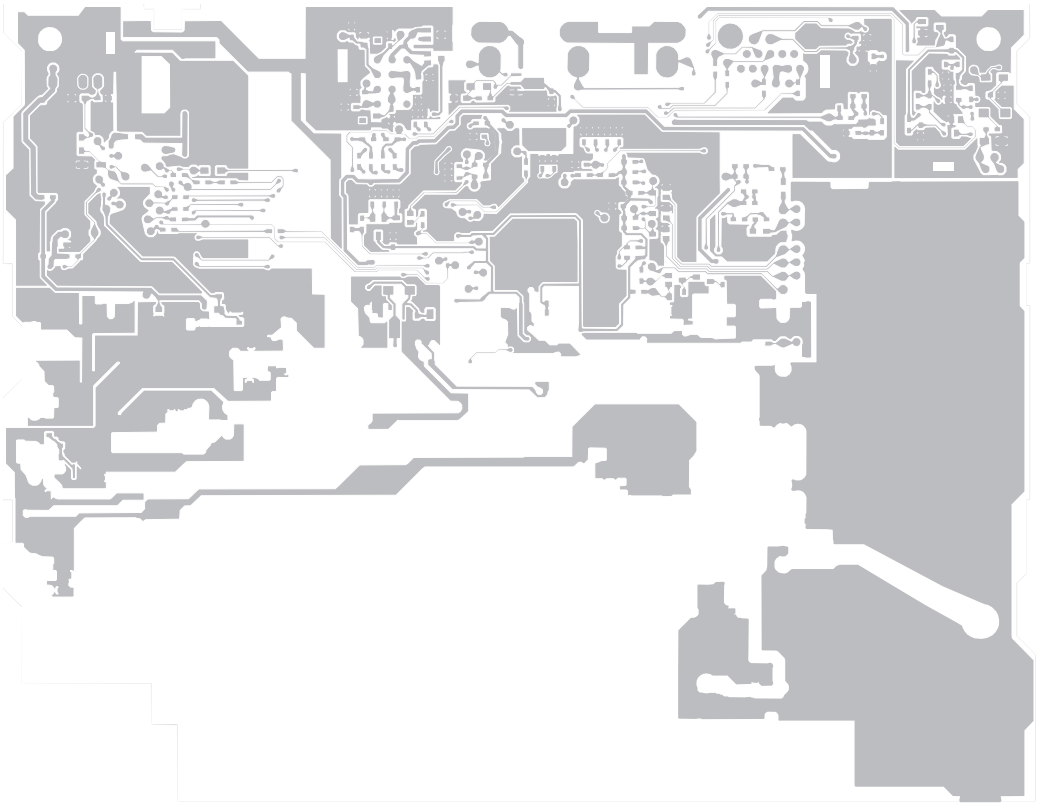

Step	Adjustment item	Mode	Input (input test pin,specs, other conditions)	Output (measuring point, waveform)	Measuring instruments	Specs	Adjusting point
1	Composite video level	VTR	Input test pin : VCR1INV Signal : 100IRE(white 100%) Level : 1.0Vp-p(via 75Ω)	Measuring point : SELV 	Oscilloscope	1.00 ± 0.05Vp-p Measure between the sync tip and 100IRE (top level). Measuring conditions: Select the 75Ω terminal on the measuring instrument.	VR1551

(1) The Video level (Vlevel) is out of spec.
When the Vlevel is more than 1.05Vp-p, the images become whitish.
When the Vlevel is less than 0.95Vp-p, the images become blackish.

6.5 INVERTER PCB ADJUSTMENT

● **Adjustment point**

No	Adjustment item	Input signal	Measuring point	Adjusting point	Measuring method and specs.	Remarks
1	BACK LIGHT DRIVE FREQUENCY	Apply 14.4V ± 0.2V to TP VPPFL1 TP GNDFL1, TP INVPUL, TP DUTY and TP INBST : GND	TP:FL1,FL2	VR 5001	48.0 ± 0.1kHz	100k ohms is connected between TP FL1 and TP FL2. It acts as the monitor of the waveform after potential. Don't acts as the monitor of the TP FL2 directly. (there is a possibility that a measuring instrument may be destroyed, for high voltage.) Out of spec., when frequency change of following may become impossible.
2	FREQUENCY CHANGE CHECK	Apply wave of 98.0 ± 1kHz to TP INVPUL 5V 0V 10 ± 2%	TP:FL1,FL2		49.0 ± 0.5kHz	It checks that the waveform after potential is set to 49 kHz
3	FREQUENCY CHANGE CHECK	Apply wave of 104.0 ± 1kHz to TP INVPUL 5V 0V 10 ± 2%	TP:FL1,FL2		52.0 ± 0.5kHz	It checks that the waveform after potential is set to 52 kHz

6.6 MONITOR PCB ADJUSTMENT

● **Adjustment point**

MONITOR PCB(SIDE B)

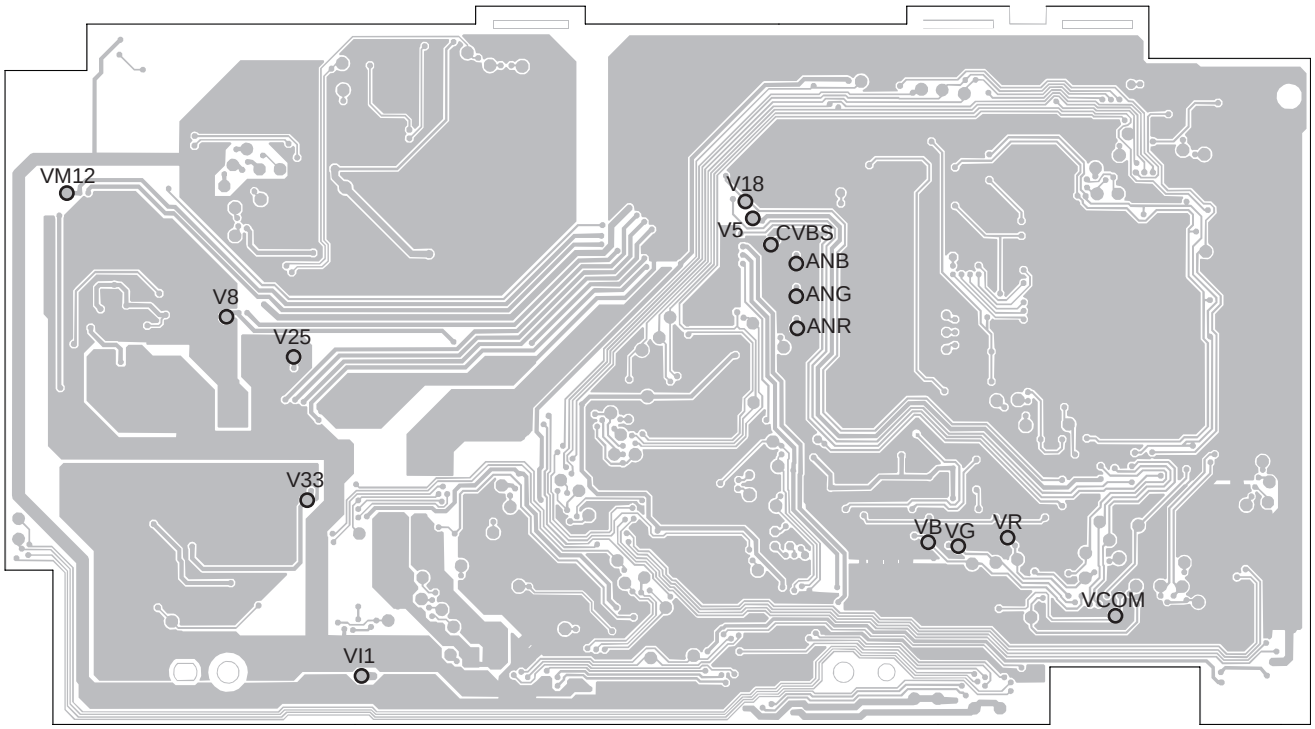

Notes:
When the power supply for TC90A64AF-P (IC4001) is OFF, be careful not to apply any voltage to its terminals except for IIC lines(SDA and SCL). The IIC lines can accept a maximum of 5V.

No	Adjustment item	Input	Measuring point	Adjusting point	Measuring method and specs.	Remarks
1	3.3V power supply verification	Apply 14.4V to TP VI1.	(TP V33)	—	V33 = 3.3V ± 0.3V	
2	2.5V power supply verification	Apply 14.4V to TP VI1.	(TP V25)	—	V25 = 2.5V ± 0.2V	
3	5V power supply verification	Apply 14.4V to TP VI1.	(TP V5)	—	V5 = 5.0V ± 0.3V	
4	8V power supply verification	Apply 14.4V to TP VI1.	(TP V8)	—	V8 = 8.0V ± 0.6V	
5	18.5V power supply verification	Apply 14.4V to TP VI1.	(TP V18)	—	V18 = 18.5V ± 0.8V	
6	-12V power supply verification	Apply 14.4V to TP VI1.	(TP VM12)	—	VM12 = -12.0V ± 0.6V	

Notes:
When the power supply for TC90A64AF-P is OFF, be careful not to apply any voltage to its terminals except for IIC lines(SDA and SCL). The IIC lines can accept a maximum of 5V.
2) In the following table, SA**h is a sub-address of TC90A64AF-P.

No	Adjustment item	Input	Measuring point	Adjusting point	Measuring method and specs.	Remarks
7	Vcom amp output Voltage waveform Verification	Any input signal	TP VCOM	—	4.50V ± 0.20V	
8	Input waveform verification (RGB)	Apply a white 100% signal toTP AVR,ANG. ANB.	TP ANR,ANG, ANB	—	0.70V ± 0.02V	The signal generator should be used via 75 ohms. (specs in desinging : 75.0 ± 0.2ohms)
9	Input waveform verification (composite)	Apply a white 100% signal toTP CVBS.	TP CVBS	—	1.50V ± 0.04V	The signal generator should be used via75 ohms.
10	RGB amp output voltage waveform verification	Apply a black signal to TP ANR,ANG,ANB. (Video level:0%)	TP VG	—	3.9V ± 0.2V	The input signal has no setup. (Apply a black signal to TP CVBS)
11	Gamma 0 Verification	Apply a 10-step signal to TP ANR,ANG,ANB.	TP VG	—	The first-step A = 0.50V ± 0.10V A= (A1+A2)/2 A1 A2	The input 10-step signal has no setup.
12	Gamma 2 verification	Apply a 10-step signal to TP ANR,ANG,ANB.	TP VG	—	The 10-step A = 3.10V ± 0.15V A= (A1+A2)/2 A1 A2	The input 10-step signal has no setup. If the measured value is out of specs, change the setting ofSA24h D11 - 8 (γ2 inflection point: GAMMA2 in the line adjustment 1 mode) (Register setting specs: 4 ± 1)

Notes:
1) When the power supply for TC90A64AF-P is OFF, be careful not to apply any voltage to its terminals except for IIC lines(SDA and SCL). The IIC lines can accept a maximum of 5V.
2) In the following table, SA**h is a sub-address of TC90A64AF-P.

No	Adjustment item	Input	Measuring point	Adjusting point	Measuring method and specs.	Remarks
13	B SUB BRIGHT	Apply a 10-step signal to TP ANR,ANG, ANB.	TP VG and VB	Register setting of SA39h D11 - 8	Adjust the first step levels of the G waveform and the B waveform. 	Register setting specs : 8 ± 2 (specs in designing: 8 ± 1) In the Line adjustment 2 mode, SUB BRI B can be used as the adjusting point.
14	B SUB CONTRAST	Apply a 10-step signal to TP ANR,ANG, ANB.	TP VG and VB	Register setting of SA26h D7 - 1	Adjust the 10th step levels of the G waveform and the B waveform. 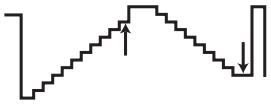	Register setting specs: 64 ± 3 (specs in designing: 64 ± 2) In the Line adjustment 2 mode, SUB CON B can be used as the adjusting point.
15	R SUB BRIGHT	Apply a 10-step signal to TP ANR,ANG, ANB.	TP VG and VR	Register setting of SA39h D15 - 12	Adjust the first step levels of the G wave form and the R waveform.(Measuring point is the same as that of No,13.)	Register setting specs: 8 ± 2 (specs in designing: 8 ± 1) In the Line adjustment 2 mode, SUB BRI R can be used as the adjusting point.
16	R SUB CONTRAST	Apply a 10-step signal to TP ANR,ANG, ANB.	TP VG and VR	Register setting of SA26h D15 - 9	Adjust the 10th step levels of the G waveform and the R waveform.(Measuring point is the same as that of No,14.)	Register setting specs: 64 ± 3 (specs in designing: 64 ± 2) In the Line adjustment 2 mode, SUB CON R can be used as the adjusting point.
17	Horizon dot position	Any input signal	—	Register setting of SA2Ah D3 - 0	5(0101)	After being written in,the setting value of EEP-ROM is checked. 2 mode,DOT CLK can be used as the adjusting point.
18	Aging	Any input signal	—	—	Keep the unit in the operation mode for 30 minutes or longer.	Block light lighting. An animation is displayed.
19	Flicker	Input a signal for alternate white and black lines to TP ANR, TP ANG and TP ANB.	Screen	Register setting of SA22h D15 - 8	Adjust so that the flickers become minimum in all	If it input a signal for alternate white into TP CVBS, it is possible. (However, adjustment by RGB has priority.) The luminance level of the input signal: 50%. In the flicker adjustment mode, COM DC can be used as the adjusting point.

Flicker adjustment has been deviated The images flicker.

●EEPROM setting mode

*) Since this product does not have OSD IC, OSD for adjustment is displayed by using GGF1416 and GGF1463 at the time of monitor adjustment. As you will find lands for 14 pins with 0.8mm pitch at the left top part of the monitor board, directly solder a flexible PCB of GGD1323 for adjustment. As GGD1322 is not used, be careful not to short the terminal.

[Operations]
To enter the setting mode, while keeping the EPRTEST terminal at "Low",
turn reset the monitor micro computer. While pressing the [REAR] and [EQ] Kyes at the same time,reset.
Flicker adjustment mode
Line adjustment 1 mode
Line adjustment 2 mode
Dimmer parameter setting mode

[↑ ↓] button: Used to select a desired adjustment item in each mode
[←→] button: Used to adjust the selected item

Notes:
1) The setting values are written in the EEPROM and then the read-out data is displayed on the screen.
WRITE and READ operations are processed by the block data of 16 bits.
The total bits for the settings depend on adjusting items.
2) For CS (Check Sum) items, when the settings are changed, the CS value is written in 8 bits by applying the exclusive OR (XOR). The CS value is first written in the EEPROM and then the read-out data is displayed.
If the written data is different from the read-out data, the letter color for the read-out data is changed.

● Memory items and addresses on the EEPROM(S-93C46BR0I-J8T1)

	EEPROM address	Bit15	Bit14	Bit13	Bit12	Bit11	Bit10	Bit9	Bit8	Bit7	Bit6	Bit5	Bit4	Bit3	Bit2	Bit1	Bit0
	00H	Dimmer external light threshold (high)								Dimmer external light threshold (low)							
	01H	Backlight output (upper limit)								Backlight output (lower limit)							
	02H	Common reverse output center (COM DC) PIP SA:22h[B15-8]								Common reserve output amplitude (COM AMP) PIP SA:22h[B7-2]						Don't care	
	03H	Don't care		Output clamp DC (RGB BIAS) PIP SA:23h[B13-8]						Don't care				γ 0 inflection point (GAMMA 0) PIP SA:23h[B3-0]			
	04H	γ 3 inflection point (GAMMA 3) PIP SA:24h[B15-12]				γ 2 inflection point (GAMMA 2) PIP SA:24h[B11-8]				γ 1 inflection point (GAMMA 1) PIP SA:24h[B7-3]					Don't care		
	05H	Output sub contrast R (SUB CON R) PIP SA:26h[B15-9]							Don't care	Output sub contrast B (SUB CON B) PIP SA:26h[B7-1]							Don't care
	06H	Sub brightness R after γ circuit (SUB BRI R) PIP SA:39h[B15-12]				Sub brightness B after g circuit (SUB BRI B) PIP SA:39h[B11-8]				Don't care							
	07H	Don't care								Don't care				Clock phase adjustment (DOT CLK) PIP SA:2Ah[B3-0]			
	08H	Don't care								Don't care					Sharpness (SHARPNESS) PIP SA:05h[B2-1]		Don't care
	09H-1BH	Don't care															
	1CH	Check sum address (00h-1bh)															
	1DH	Don't care								Common reverse output center(Reference)							
	1EH	Don't care												Clock phase adjustment initial value			
	1FH	Don't care															
	20H	External light of dimmer adjustment(H)								Back light of dimmer adjustment(H)							
	21H	External light of dimmer adjustment(M)								Back light of dimmer adjustment(M)							
	22H	External light of dimmer adjustment(L)								Back light of dimmer adjustment(L)							
	23H-3FH	Don't care															

EEPROM initial value

Item	Meaning	initial value(hex)	initial value(DEC)
COM_DC	Common reverse output center	8C	140
COM_AMP	Common reverse output amplitude	1E	30
RGB_BIAS	Out clamp DC	00	00
GAMMA0	γ 0	02	02
GAMMA3	γ 3	04	04
GAMMA2	γ 2	04	04
GAMMA1	γ 1	13	19
SUB_CON_R	Output sub contrast R	40	64
SUB_CON_B	Output sub contrast B	40	64
SUB_BRI_R	Sub brightness R after γ circuit	08	08
SUB_BRI_B	Sub brightness B after γ circuit	08	08
DOT_CLK	Clock phase adjustment	05	05
SHARPNESS	Sharpness	03	03
BL_MAX	Back light output (Max.)	C4	196
BL_MIN	Back light output (Min.)	5B	91
REF_HIGH	Dimmer (H)	C0	192
REF_LOW	Dimmer (L)	60	96
LUM_HIGH	External light (H)	E2	226
LUM_MID	External light (M)	87	135
LUM_LOW	External light (L)	52	82
BL_HIGH	Back light (H)	C4	196
BL_MID	Back light (M)	C4	196
BL_LOW	Back light (L)	68	104

[Displays in each mode]

In the following figures, the letters and numbers surrounded by a large square are for OSD examples.
On the screen, the adjustment names and the settings (or written data) are listed.
The settings (or written data) will change when some adjustments are made in each mode.

* The following examples show the maximum values.

(1) Flicker adjustment mode

Adjustment item	Adjustment range	Adjustable name	Settings or written data (DEC)		
Common reverse output center	[0 - 255]	COM DC	255		

(2) Line adjustment 1 mode

Adjustment item	Adjustment range	Adjustable name	Settings or written data (DEC)		
Bright (SA22: B7-2)	[0 - 63]	BRIGHT	63		LINE1
Contrast (SA25: B7-1)	[0 - 127]	CONTRAST	127		
Common reverse output center	[0-255]	COM DC	255		
Common reverse output amplitude	[0-63]	COM AMP	63		
Output clamp DC	[0-63]	RGB BIAS	63		
γ0 inflection point	[0-15]	GAMMA0	15		
γ3 inflection point	[0-15]	GAMMA3	15		
γ2 inflection point	[0-15]	GAMMA2	15		
γ1 inflection point	[0-31]	GAMMA1	31		
				CS	FF

Notes:
1) CONTRAST data
The CONTRAST data is adjustable, and used as reference data for other adjustment items, which is not memorized in the EEPROM.
2) BRIGHT and COM AMP data
The BRIGHT and COM AMP adjustments are made by using the same 2-screen IC register(SA22h B7-2: common reverse output amplitude).
Therefore, adjusting one of the data will change the other one.

(3) Line adjustment 2 mode

Adjustment item	Adjustment range	Adjustable name	Settings or written data (DEC)		
Bright (SA22: B7-2)	[0 - 63]	BRIGHT	63		LINE2
Contrast (SA25: B7-1)	[0 - 127]	CONTRAST	127		
Output sub contrast R	[0 - 127]	SUB CON R	127		
Output sub contrast B	[0 - 127]	SUB CON B	127		
Sub brightness R after γ circuit	[0 - 15]	SUB BRI R	15		
Sub brightness B after γ circuit	[0 - 15]	SUB BRI B	15		
Clock phase adjustment	[0 - 15]	DOT CLK	15		
Sharpness	[0 - 3]	SHARPNESS	3		
				CS	FF

Notes:
1) CONTRAST data
The CONTRAST data is adjustable, and used as reference data for other adjustment items, which is not memorized in the EEPROM.
2) SUB BRI R and SUB BRI B data
The displayed value or EEPROM written data is different from the setting value for the 2-screen IC register (IC4001 : TC90A64AF-P).
(Before displayed on the screen, the setting value is converted via some software.)

Displayed value (adjusting value) (DEC)	E2PROM written value. (DEC)	2-screen IC register setting (BIN)	
15	15	0111	(MAX)
14	14	0110	
· ·	· ·	· ·	
9	9	0001	
8	8	0000	(TIP)
7	7	1111	
· ·	· ·	· ·	
1	1	1001	
0	0	1000	(MIN)

(4) Dimmer parameter setting mode

Adjustment item	Adjustment range	Adjustable name	Settings or written data (DEC)		
Backlight output (MAX)	[0 - 255]	BL MAX	FF		DIMMER
Backlight output(MIN)	[0 - 255]	BL MIN	FF		
Dimmer threshold (high)	[0 - 255]	REF H	FF		
Dimmer threshold (low)	[0 - 255]	REF L	FF		
External light point (high)	[0 - 255]	LUM H	FF		
External light point (middle)	[0 - 255]	LUM M	FF		
External light point (low)	[0 - 255]	LUM L	FF		
Backlight point (high)	[0 - 255]	BL H	FF		
Backlight point (middle)	[0 - 255]	BL M	FF		
Backlight point (low)	[0 - 255]	BL L	FF	CS	FF

Note:
The dimmer point data is memorized in the EEPROM, but not treated as a CS item.
It's because the settings are adjustable by the user.

● Dot Clock Adjustment Mode

[Operations]

· [Dot Clock adjustment mode] starting procedure
  Reset start while pressing the [ENT] and [ANGLE+] Keys together.
· [Dot Clock adjustment mode] cancellation Monitor's microcomputer OFF.
· The operation after this should use Navigation's remote controller.
· [↓↑] button : Used to select a desired adjustment item in each mode.
· [← →] button : Used to adjust the selected item.

[EEPROM : S-93C46BR0I-J8T1]

The setting values are written in the EEPROM and then the read-out data is displayed on the screen.
WRITE and READ operations are processed by the block data of 16 bits.

[Display]

In the following figures,a large square are for OSD examples.

Dot Clock adjustment mode

Adjustment item	Adjustment range	Adjustable name	Settings or written data (DEC)		
Clock phase adjustment	[0 - 15]	DOT CLK	15		
Clock phase adjustment (initial)	[0 - 15]	[FACTORY	8	]	
Common reverse output center	[0-255]	COM DC	255		
Common reverse output center adjustment (initial)	[0-255]	[FACTORY	140	]	

* CS(Check Sum)display is not performed.

● To operate the Monitor Assy only

Setting of the TP1(EPRTEST), TP2(TESTAGE) and TP3(TOUCHTS) in single operation mode is as follows.

TP2	TP3	TP1	Contents
L	H	H	For aging (See p.221.)
L	-	L	EEPROM setting mode (See p.222.)
L	L	H	Touch panel test mode (See p.231.)

H : Not connect
L : Connect to the ground

Contents of single operation mode

[For aging]

MVIPW : ON
MFLPW : ON
DIMMER : 5V (FFH)
BRIGHT : ± 0
CONTRAST : ± 0
WIDE MODE : Full size

[EEPROM setting mode]

MVIPW : ON
MFLPW : ON
DIMMER : The calculated value from coordinates of EEPROM data
BRIGHT : ± 0
CONTRAST : ± 0
WIDE MODE : Full size

[Touch panel test mode]

MVIPW : ON
MFLPW : ON
DIMMER : The calculated value from coordinates of EEPROM data
BRIGHT : ± 0
CONTRAST : ± 0
WIDE MODE : Full size

6.7 TEST MODE

● NAVIGATION TEST MODE

1. How to start the test mode

1. When +Battery and ACC are ON, push RESET and EJECT buttons simultaneously.
2. Release RESET button only.
3. When “password entry screen” is displayed, release EJECT button.
4. Enter the password.
5. When the password has been entered, press [ENTER] key.
6. If the correct password has been entered, the test mode menu will be displayed.

* The password entry screen, as the one used in the previous model, is no longer displayed.

<< Password for the service >>
The password is [↑(up)] → [↑(up)] → [↓(down)] → [↓(down)] → [ENTER].
If 8 digits or more are entered and [ENTER] key is pressed, it will be treated as a password error.

• Password entry screen

• Password OK : After 2 seconds or so, the screen will automatically move on to the menu screen.

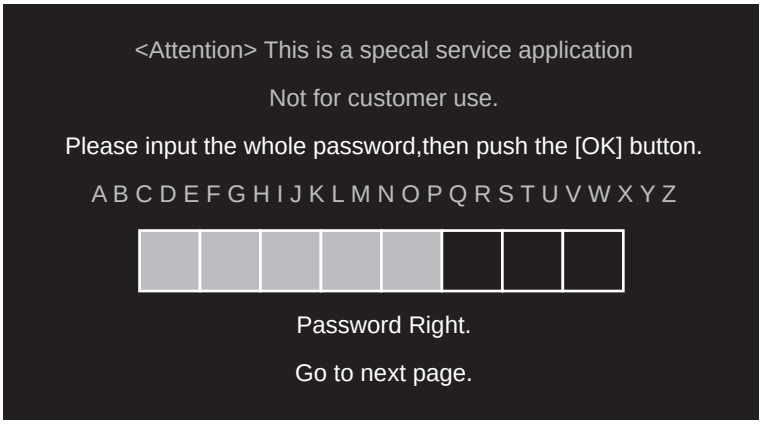

• Password NG : Nothing will be displayed, and reboot action will be taken.

2. Test mode menu

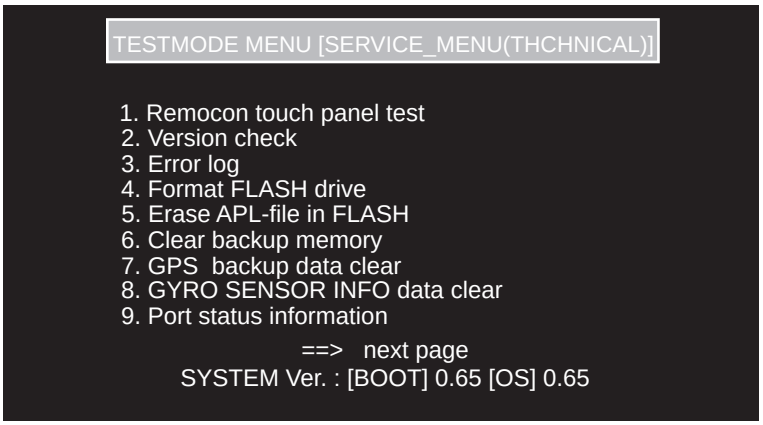

No.	Inspection item	Outline of inspection	Content if inspection
1	Remocon touch panel test	Remote controller touch panel inspection	Calibration setting and remote controller inspection are performed.
2	Version check	Version information check	Display of various version information. (system software, GPS, system microprocessor, microprocessor for mechanism control, microprocessor for timer). The screen will return to “menu” by BACK key.
3	ERROR log	Error history entry	History of system software errors stored in SRAM is displayed. Maximum 8 events from the error last occurred can be displayed. The screen will return to “menu” by BACK key.
4	Format FLASH drive	FLASH format	FLASH domain used by the system soft is initialized. When the job is done, the screen will return to “menu”.
5	Erase APL-file in FLASH	Application file inside FLASH is clear	Application file inside FLASH is clear. *(Except voice data and SRAM backup variable) When the job is done, the screen will return to “menu”.
6	Clear backup memory	Back up variables initialization	SRAM domain used by the system software is initialized. When the job is done, reboot action will be taken.
7	GPS backup data clear	GPS back up data clear	SRAM domain used by GPS is initialized. When the job is done, the screen will return to “menu”.
8	GYRO SENSOR INFO data clear	Learned data inside gyro sensor is clear	Learned data inside gyro sensor is cleared. When the job is done, the screen will return to “menu”.
9	Port status information	Port status display	Port status is displayed. (reverse, parking, pulse, SDRAM capacity.)

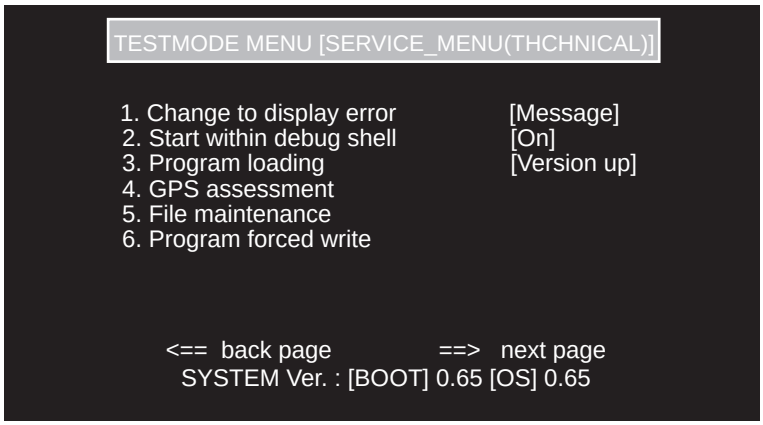

No.	Inspection item	Outline of inspection	Content if inspection		
1	Change to display error	Switching of error information display	Display setting for error cases. (for debugging) Message/Information (error information) selectable.		
2	Start within debug shell	Switching of debug shell start	Setting for debug shell start. (for debugging) Off (no initial start)/On (initial start) selectable.		
3	Program loading	Switching of program loading	Recognition method for boot up program write is changed.		
			Disc version (default)	System program	Write when the version No. in the disc is higher.
				System data	Write when the version No. in the disc is higher.
				GPS program	Write when the version No. in the disc is higher.
				Application program	Write when the version information is different from the one in disc.
			Version upgrade (for debug)	System program	Write when the version No. in disc or card is higher.
				System data	Write when the version No. in disc or card is higher.
				GPS program	Write when the version No. in disc or card is higher.
				Application program	Write when the version No. in disc or card is higher.
4	GPS assessment	GPS assessment system start	GPS assessment system can be used. The system will return to “menu” by BACK key.		
5	File maintenance	File maintenance function	File maintenance operations are made. Formatting of SRAM drive and PC card (ATA Flash Card) are made. SRAM data is retrieved and copied to PC card. Data retrieved from SRAM is copied to SRAM from PC card.		
6	Program forced write	Program forced write	Rewriting of SYS (system), GPS (GPS) and APL (application) software are done by force. (Joystick is used) The system will return to “menu” by BACK key.		

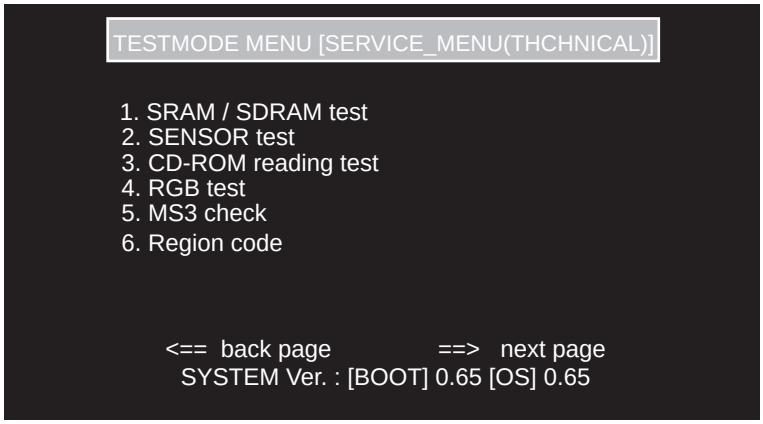

No.	Inspection item	Outline of inspection	Content if inspection
1	SRAM/SDRAM test	Memory inspection	SRAM : Device inspection and bus inspection are performed against all SRAM domains. Data will be protected. (applicable to both 32M and 64M) SDRAM : Device inspection and bus inspection are performed against all SDRAM domains. Data will be protected for both BIOS domain and USER domain. The function for SDRAM all domain inspection will activate by the built-in instruction RAM.
2	SENSOR test	Sensor inspection	G sensor, gyro, power supply voltage and installation condition are displayed. The system will return to “menu” by BACK key.
3	CD-ROM reading test	CD-ROM read test	Inspection for reading by CD-ROM drive is performed.
4	RGB test	Image RGB inspection	RGB inspection (Upper half, 8 colors. Black/blue/red/pink/green/light blue/yellow/white display. Lower half, 3 colors. Red/green/blue.) →red (FULL)→green (FULL)→blue (FULL)→ Switching can be made by [←] and [→] keys. The system will return to “menu” by BACK key.
5	MS3 check	MS3 check [V+R]	MS3 mechanism test mode inspection.
6	Region code	Region code display	Region code display.

3. How to select test mode menu

Select a desired menu by [↑] and [↓] keys, and execute by pressing [ENTER] key.
Pages can be changed by [←] and [→] keys.

4. Version information

Version No. for BOOT section = X.XX System software does not exist in SDRAM.
Version No. for BOOT section = X.XX Version No. for SDRAM = Y.YY

● Remocon touch panel test

- How to operate the touch panel test mode is described below.
- First, "1. Setup touch-panel effective range" in the touch panel test menu is made.
- Next, "3. Test Touch-panel", and if the result is OK, then EXIT the screen.
- If the result is NG, conduct "2. Setup calibration", and conduct "3. Test Touch-panel" once again. If the result is OK, then EXIT the screen.
- Furthermore, details of the misalignment can be verified by the "5. Check Touch-panel compensation".

*) When inspecting the touch panel, use something thin with a round tip such as the touch pen. Furthermore, do not apply excessive force to the touch panel.

Main Menu

```
### Remocon / Touch-panel Test ###

* 1. Setup touch-panel effective range
  2. Setup calibration
  3. Test Touch-panel
  4. Check now calibration condition
  5. Check Touch-panel compensation
  6. Check Touch-panel graphics
  7. Check Touch-panel navi coordinate

[CR]            Menu selection
[JS UP / DOWN]  Cursor movement
[BACK]          End of test
```

"*" mark shown on the left side of menu item "1" indicates that the setting has been completed. The setting items where "*" is actually indicated will be "1. Setup ~" and "2. Setup ~" only.

[CR]	Enter
[UP/DOWN]	Selection of the inspection item
[BACK]	Return (to the test mode menu)

1. Setup touch-panel effective range

```
### Setup touch-panel effective range ###
The present of the touch-panel effect range (before. after)

min X : ( 37,  36)
max X : (230, 232)
min Y : ( 36,  36)
max Y : (210, 211)
<Caution>
  Please trace a white line.
  Please move to calibration setup after this setup.
```

Adjustment steps

1) Trace the edge of the screen along the monitor resin frame with a round-headed thing to obtain the coordinates.
2) Press the [BACK] key.

Explanation of the displays

min_x(A,B) : X coordinate of the touch panel • minimum value received
max_x(A,B) : X coordinate of the touch panel • maximum value received
min_y(A,B) : Y coordinate of the touch panel • minimum value received
max_y(A,B) : Y coordinate of the touch panel • maximum value received

A = A coordinate which is already stored in the SRAM (If there is no previous data in the SRAM, “min=90, max=180” will be displayed).
B = An updated coordinate which is planned to be set in the SRAM this time (If there is no previous data in the SRAM, “min=90, max=180” will be displayed).
[BACK] : The preset effective range is registered, and the screen will return to the remote controller inspection menu. The data of the effective range will be recorded in the SRAM.

In case the compensation value is not preset in the SRAM, the following initial (default) value will be entered automatically at the time of navigation system boot up.
min_x = 42 (right edge limit value)
max_x = 246 (left edge limit value)
min_y = 49 (bottom edge limit value)
max_y = 238 (top edge limit value)

2. Setup calibration

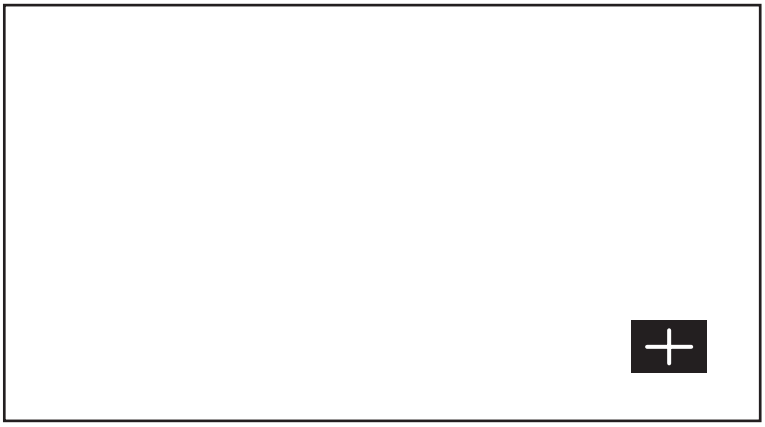

Explanation
- A [+] cursor is displayed at 16 locations on the screen for calibration. Finally, verification of a single point is made. The cursor is always displayed at one location only, and moves on to the next location as the current one is correctly pressed.
- When pressing on the [+] cursor, make sure to press at the center of “+”.
- The result of calibration will be recorded in the SRAM.
- If effective operation is not made for 30 seconds, the system will recognize as “erroneous end” and stops the calibration.

3. Test Touch-panel

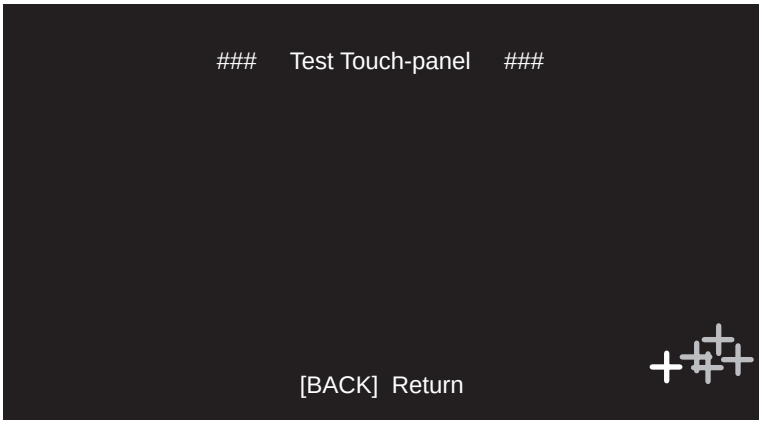

Explanation on touch panel misalignment verification test.

1) The test is intended to verify if the touched point on the touch panel is correctly recognized or not.
   [+] cursor will be displayed at 16 locations on the screen.
   The cursor will be displayed in “white color“ only one at a time.
   Each time the cursor is touched correctly, the next point will be displayed.
   On the other hand, if it is recognized that the point touched was ±4 dots vertically and ±5 dots horizontally away from the center of the displayed [+] cursor, the erroneously recognized coordinate [+] will be drawn in “red color“.
2) When touching the [+] cursor, touch the center of the + mark correctly.
3) If [BACK] is touched, the test will be finished, and the screen will return to the menu screen of the touch panel test mode.

If this test turns out to be NG, it will be necessary to redo “1. Setup touch-panel effective range“ and “2. Setup calibration“. Repeat the above steps once again.

4. Check now calibration codition

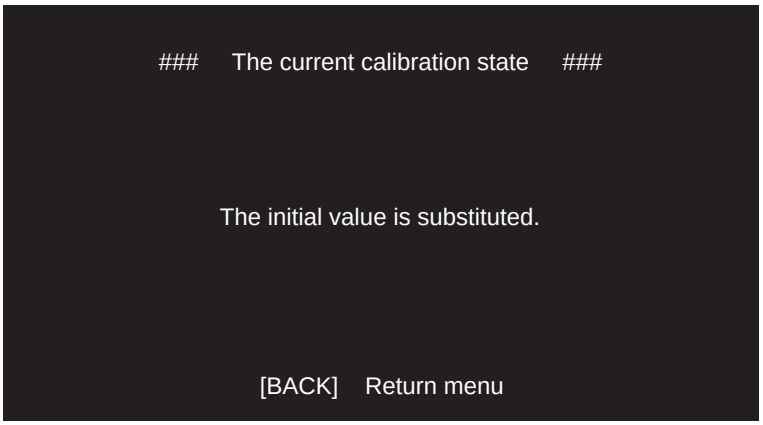

Explanation on the setting status of the calibration compensation value.
The current calibration compensation status is displayed.
The following data will be displayed.
“With no calibration value” (in white characters)
In case the compensation value does not exist in the SRAM.
“The effective range value is stored”
In case the compensation value for the upper limit and the lower limit are preset in the SRAM.
“The calibration compensation value is stored”
In case the calibration compensation values for the 16 points are preset in the SRAM.
“The effective range & calibration value is stored.”
In case the upper limit and the lower limit values and the 16 points calibration values are preset in the SRAM.
“The initial value is substituted.”
In case the value stored as the initial (default) value is preset in the SRAM.
“Error Condition”
In case the SRAM value is demolished or some unexpected situation is happening.

5. Check Touch-panel compensation

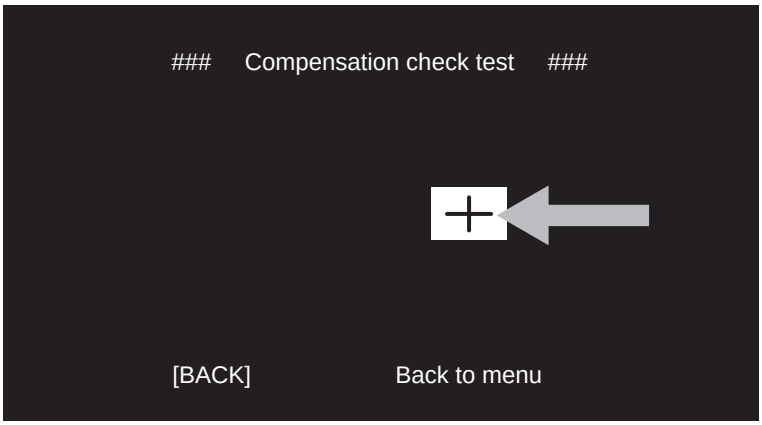

[BACK] : The system will return to the remote controller inspection menu.

Explanation of the inspection details
- Regarding this inspection, the title only will be displayed at the initialized stage.
- As shown by the arrow, press any desired location on the monitor.
- A coordinate after the calibration correction will be displayed by the [+] mark against the coordinate recognized as pressed.

6. Check Touch-panel graphics

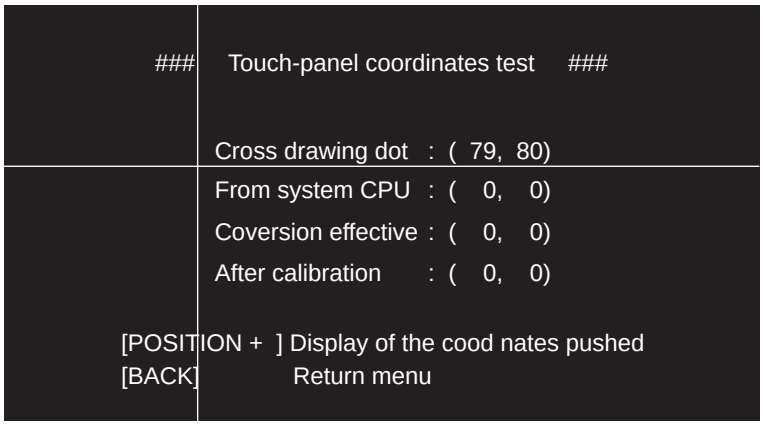

[NAVI] + pressing the touch panel : The coordinate of the touch panel at that time will be displayed.
[↑] : Horizontal line will move upward.
[↓] : Horizontal line will move downward.
[←] : Vertical line will move to the left.
[→] : Vertical line will move to the right.
[BACK] : The system will return to the remote controller inspection menu.

Explanation of the displayed coordinate (from top to bottom)
(79, 80) : Coordinate of the crossing point by the vertical and the horizontal lines (X direction, Y direction).
[(0~500, 0~240)]
(0, 0) : AD data value (X direction, Y direction) representing the coordinate of the pressed location received from the system control microprocessor.
(0, 0) : Coordinate (X direction, Y direction) obtained by normalizing the AD data value of the pressed location within the effective range.
(0, 0) : Coordinate (X direction, Y direction) obtained by adding the correction based on calibration to the normalized coordinate.

7. Check Touch-panel navi coordinate

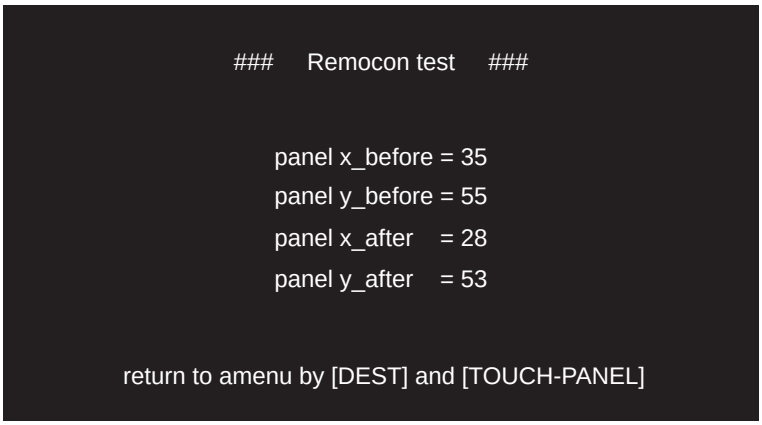

[BACK] + pressing the touch panel will make the system return to the remote controller inspection menu.

Explanation of the displayed content.
panel x_before : X coordinate normalized (expanded) within the effective range.
panel y_before : Y coordinate normalized (expanded) within the effective range.
panel x_after : X coordinate obtained by adding the correction based on calibration.
panel y_after : Y coordinate obtained by adding the correction based on calibration.

● Version check

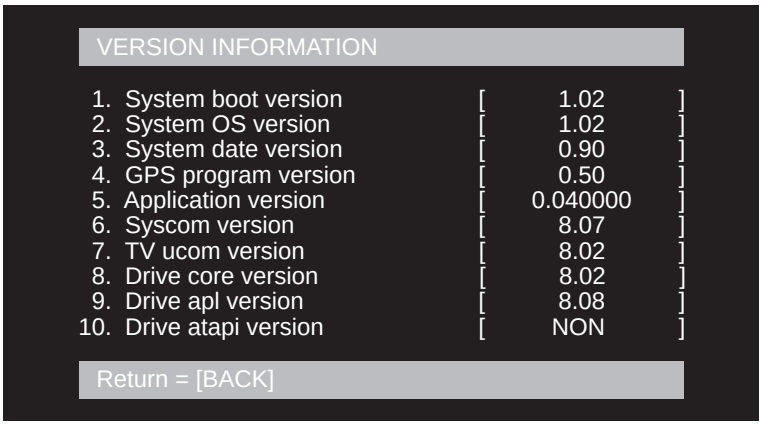

	Item	Content	Information display	File name
1	System boot version	Version information of the system software BOOT section (FLASH) is displayed.	[**.**]→Version information of the system software BOOT section.	PL030BOT.PRG
2	System OS version	Version information of the system software OS section (FLASH) is displayed.	[**.**]→Version information of the system software OS section. [NG]→System program does not exist.	PLO30SYS.PRG
3	System data version	Version information of the system software data section (SDRAM) is displayed.	[**.**]→Version information of the system software data section. [NG]→System data do not exist.	PLO30SYS.DAT
4	GPS program version	Version information of the GPS program (DRAGON) is displayed.	[**.**]→Version information of the GPS program. [NG]→GPS program does not exist.	PLO30GPS.PRG
5	Application version	Version information of the application program (SDRAM) is displayed.	[**.**]→Version information of the application program. [NG]→Application program does not exist.	PLO30APL.PRG
6	Syscom version	Version information of the system microprocessor is displayed.	[**.**]→Version information of the system microprocessor. [NG]→Communication with the system microprocessor has not been established.	
7	TV ucom version	Version information of the microprocessor for TV is displayed.	[**.**]→Version information of the microprocessor for TV. [NG]→Communication with the microprocessor for TV has not been established.	
8	Drive core version	Core version information of the microprocessor for mechanism control is displayed (V+R).	[**.**]→Core version information of the microprocessor for mechanism control. [NG]→Communication with the microprocessor for mechanism control has not been established. [NON]→ROM only is for mechanism control.	
9	Drive apl version	Application version information of the microprocessor for mechanism control is displayed (V+R).	[**.**]→Application version information of the microprocessor for mechanism control. [NG]→Communication with the microprocessor for mechanism control has not been established. [NON]→ROM only is for mechanism control.	
10	Drive atapi version	Version information of the microprocessor for mechanism control is displayed (ROM only).	[**.**]→Version information of the microprocessor for mechanism control. [NG]→Communication with the microprocessor for mechanism control has not been established. [NON]→V+R mechanism control.	

● Error Information

1. Error Information

Descriptions of error information, for errors arising from system software problems, will be provided in this section.
Up to eight sets of information, related to the system software's errors, will be stored in the SRAM.
By executing hi_sysdwn( ) the line number (on which the error occurred), the error code and detailed information of the error, will be stored in the error log.

Hi_sysdwn( ) will be executed in the following two circumstances:

1. hi_sysdwn( ) will be intentionally stored if fatal errors occur with each BIOS.
2. If multiple exceptions, fatal exceptions, illegal command codes and trap command errors occur.

2. Error Log's Entry Function

Up to twenty-four sets of information, related to errors starting with the latest error, will be displayed by the error log entry function.
There are two types of error log displays.
The display will vary when the argument provided to hi_sysdwn( ), depending on whether detailed information (such as program name, version number, creation date, creation time and creator name) exists or not.

1. When detailed information exists:

```
** ERROR INFORMATION **

ERCD  =  00000028(40)
FILE  =  ini_usf.c
LINE  =  510(000001fa)
VERS  =  1.1.1.1
DATE  =  2003/08/08
TIME  =  06:07:26
AUTH  =  daisuke

ERROR-TIME  ffff-ff-ff  ff:ff:ff

     No.4 ← ERROR No.3 → No.2
  Stop when push [BACK] button.
```

ERCD	Error code.
FILE	Error occurring program name.
LINE	Error occurring program line number.
VERS	Error occurring program version number.
DATE	Error occurring program creation date.
TIME	Error occurring program creation time.
AUTH	Error occurring program creator name.
ERROR-TIME	Error occurrence date and time.

2. When detailed information does not exist:

```
** ERROR INFORMATION **

type = 000000b7(183)
ercd = ffffc002(-16382)
inf  = ffb7ac18(-4740072)

ERROR-TIME  ffff-ff-ff  ff:ff:ff
      No.2 ← ERROR No.1 → No.24
  Stop when push [BACK] button.
```

type	Error occurring program line number.
ercd	Error code.
inf	System down information.
ERROR-TIME	Error occurrence date and time.

If an error occurs due to a multiple exception, the definitions will change to the following:

type	Execution address at the time of error occurrence.
ercd	Contributing factor for the exceptions.
inf	Program status word at the time of error occurrence.
ERROR-TIME	Error occurrence date and time.

3. Error Information Switch

The product (with default settings) will display error messages to the user if an error occurs.
Error information can be displayed if an error occurs by switching the error information in the test mode.
In either case, the error log entry display will be the same.

1) Error message display (default settings):

• Setting in the test mode:

```
TESTMODE MENU [SERVICE_MENU(TECHNICAL)]
1. Change to display error  [Message]
2. Start within debug shell  [On]
3. Program loading           [Disc version]
4. GPS assessment
5. File maintenance
6. Program forced write

<== back page    ==> next page
SYSTEM Ver. : [BOOT]0.65 [OS]0.65
```

• Display when an error occurs:

An error has occured.
Please turn power off and on again.

Une erreur a été décelée.
Veuillez éteindre puis rallumer le système.

Fehler.
Bitte System aus- und wieder einschalten.

2) Error information display

• Settings in the test mode:

TESTMODE MENU [SERVICE_MENU(TECHNICAL)]

1. Change to display error [Information]
2. Start within debug shell [Off]
3. Program loading [Version up]
4. GPS assessment
5. File maintenance
6. Program forced write

<== back page ==> next page
SYSTEM Ver. : [BOOT]0.65 [OS]0.65

Display when an error occurs:

• If error information exists:

** ERROR INFORMATION **

ERCD = f f f f f f f(-1)
FILE = tsk_ini.c
LINE = 152(00000098)
VERS = 1.11
DATE = 2003/04/03
TIME = 04:59:10
AUTH = jin

ERROR-TIME ffff-ff-ff ff:ff:ff

• If error information does not exist:

```
** ERROR INFORMATION **

type = 00000109(265)
ercd = 00000001(1)
inf  = ffe83230(-1560016)

ERROR-TIME  ffff-ff-ff  ff:ff:ff
```

4. Watch dog timer

This product has a built-in mechanism to monitor at a certain interval whether the software is correctly operating or not.
Once this mechanism becomes inoperable, “reset request” will be sent to the power supply microprocessor when a preset time (approximately 4 seconds) has elapsed.
In order to record operational situation of such an occasion, a special code which is not an error code is recorded in the ERCD.

● Port status information

```
Port status information

Reverse          Low
Parking          Low
Pulse              0
SDRAM size      64MB

[BACK] go to testmode menu.
[NAVI] information renewal.
```

Display	Content of inspection
Reverse	Reverse port status
Parking	Parking port status
Pulse	Pulse status
SDRAM size	SDRAM capacity (32M or 64M)

How to operate.
[BACK] : Return to the test mode menu.
[NAVI] : Update of the port status.

● GPS assessment

```
GPS TEST
=====================================

FLASH    :Ver.  0. 10    02 / 05 / 10
GPS      :Ver.  3. 09    02 / 03 / 12
SENSOR   :Ver.  5. 56

Press [BACK]  to return
```

FLASH	Display of DRAGON FLASH ROM version information.
GPS	Display of GPS version information.
SENSOR	Display of sensor version information.

● SENSOR test

```
SENSOR TEST
=====================================

G-SENSOR     :     1.9875 [V]
GYRO         :     2.4804 [V]
POWER        :    14.9453 [V]
FIT UP       :      OK(Best)
DISTANCE     :  SPEED PULSE
LOW SPEED    :          OK

Press [BACK]  to return
```

G-SENSOR	Display of G sensor voltage		
GYRO	Display of gyro voltage		
POWER	Display of power supply voltage		
FIT UP	Display of installation status		
	Display	Status	
	• NG	Installation position is NG.	
	• OK	Installation position is OK. (3rd best)	
	• OK (Better)	Installation position is OK. (2nd best)	
	• OK (Best)	Installation position is OK. (Best)	
DISTANCE	Display of distance calculation status.		
	Display	Status	
	• INITIALIZE	Sensor initial learning is under way.	
	• GPS	GPS distance. (Model without G sensor. No pulse connection.)	
	• G-SENSOR	G sensor distance. (simple hybrid.)	
	• ND-PG1	ND-PG1 distance.	
	• SPEED PULSE	Vehicle speed pulse distance.	
LOW SPEED	Display of minimum output speed of a low speed NG vehicle. (Depends on DISTANCE status.)		
	DISTANCE status	SPEED PULSE status	Display
	SPEED PULSE	Low vehicle speed pulse learning is under way.	CHECK
		Low vehicle speed pulse is OK.	OK
		Low vehicle speed is NG.	NG xx[km/h]
	Others		- - - - -

● DVD Test Modes

CAUTIONS
Protection is not operational against a mechanical runaway conditions during servo testing.
Critical damage can result if the system is allowed to continue in a mechanical runaway state.
If abnormal noise is heard during the test, turn the power OFF immediately.

Keys used for the DVD test mode
[OK] : Selection decided.
[BACK] : Go back.
Directional keys : [↑ ↓ ← →] keys

[MS3 X-3016 Test]

```
[MS3 X-3016 Test]

Firm Ware Revision.
Core Ver ** ** Apl Ver ** **
-------------------------------
[1] FE TestMode
[2] EDC-1 mode
[3] EDC-2 mode
[4] MS3 Memory Clear Start


Press [OK] to make a selection
Press [BACK] to  X-3016 Test top
```

Firm Ware Revision : Version of the drive used.

[1]	Start the FE test mode.
[2]	EDC1 mode (available for DVDs only).
[3]	EDC2 mode (available for DVDs only).
[4]	Executes the MS3 memory cleaning operation.
[OK]	Executes.
[BACK]	Returns to the test mode menu.

[X-3016 FE Test menu]

```
[X-3016 FE Test menu]
Status : Power Off     Data : 0000 0000
-----------------------------------------
[1] Power On
[2] Disc tipe : DVD 1-Layer
[3] Disc tipe : DVD 2-Layer
[4] Disc tipe : CD
[5] Disc tipe : CD-RW
[6] Disc Eject


Press [OK] to make a selection
Press [BACK]  -  Test top(Power Off)
```

Status : "Power Off (during normal conditions)."

[1]	Power On (proceed to servo test 1-0).
[2]	Disc type : DVD single-layer.
[3]	Disc type : DVD double-layer.
[4]	Disc type : CD.
[5]	Disc type : CD-RW.
[6]	Ejects the Disc.
[OK]	Executes.
[BACK]	Returns to the initial screen display for the test.

[X-3016 DVD Test]

```
[X-3016 DVD Test] EDC-1
-----------------------------------------
      Layer : 0
      ID      : 20 03 0A 63
-----------------------------------------

[1] Select Layer 0
[2] Select Layer 1
[3] Disc Eject


Press [OK] to make a selection
Press [BACK]  to DVD Test top(EDC end)
```

EDC-1 : Performs consecutive EDC tests.
EDC-2 : Performs EDC tests for each block.
ID : Performs ID of the test.

[1]	Select layer 0.
[2]	Select layer 1.
[3]	Ejects the Disc.
[OK]	Executes.
[BACK]	Returns to the test mode menu.

[X-3016 DVD Test]

```
[X-3016 DVD Test] EDC-1
-----------------------------------------
    Layer : 0
    ID    : 20 03 0A 63
-----------------------------------------
[1] cursor right
[2] cursor left
[3] cursor up
[4] cursor down
[5] Star EDC-1
[6] Disc Eject

Press [OK] to make a selection
Press [BACK]  to DVD Test top(EDC end)
```

EDC-1 : Performs consecutive EDC tests.
EDC-2 : Performs EDC tests for each block.
ID : Performs ID of the test.

[1]	Moves the cursor to the right by one increment.
[2]	Moves the cursor to the left by one increment.
[3]	Moves the cursor up by one increment.
[4]	Moves the cursor down by one increment.
[5]	Starts the EDC test.
[6]	Ejects the Disc.
[OK]	Executes.
[BACK]	Returns to the test mode menu.

[X-3016 DVD 1-Layer Servo. Test(1-0)]

```
[X-3016 DVD 1-Layer Servo.Test(1-0)]
Status : Power On      Data : 1000 0000
-----------------------------------------
[1] Focus Close
[2] Focus Search(Start/Stop)
[3] CRG + (Start/Stop)    [4] CRG - (Start/Stop)
[5] (LD-ON->LD-OFF / LD-OFF->LD-ON)
[6] CRG HOME
-----------------------------------------
FE Offset : 0000 0000    TE Offset    :  0000 0000
AS Offset : 0000 0000   ENV Offset :  0000 0000
TG Offset : 0000 0000    DBAL         :  0000 0000
-----------------------------------------
Press [OK] to make a selection
Press [BACK]  to DVD-1
```

Test items are basically the same for both DVDs and CDs.

Status : "Power On (during normal conditions)."

[1]	Closes in on the focus (proceed to servo test 2-0).
[2]	Performs a focus search operation (S-curve measurement). Focus operation will then be stopped.
[3]	Moves the carriage (external). The carriage transition operation will then be stopped.
[4]	Moves the carriage (internal). The carriage transition operation will then be stopped.
[5]	Performs LD-ON/OFF operation.
[6]	Returns the carriage to the home position.
[BACK]	Returns to the DVD test menu screen display.

* This operation will not be performed until the coefficient figures have been received.
* Focus closing and searching will not operate unless the LD-ON setting is made to less than 9 seconds.

[X-3016 DVD 1-Layer Servo. Test(2-0)]

```
[X-3016 DVD 1-Layer Servo.Test(2-0)]
Status : Focus Closed        Data : 2000 0000
-----------------------------------------------
[1] T.Bal
[2] Focus Jump
[3] CRG + (Start/Stop)
[4] CRG - (Start/Stop)
-----------------------------------------------
FE MAX : 0000 0000    FE MIN     :  0000 0000
AS MAX : 0000 0000    ENV MAX :  0000 0000
FE Normal : 0000 0000
TE MAX : 0000 0000    TE MIN     :  0000 0000
-----------------------------------------------
Press [OK] to make a selection
Press [BACK]  to DVD-1
```

Test items are basically the same for both DVDs and CDs.

Status : "Focus Close (during normal conditions)."
[1] Adjusts tracking balance (proceeds to servo test 3-0).
[2] Performs a focus jump operation.
[3] Moves the carriage (external). The carriage transition operation will then be stopped.
[4] Moves the carriage (internal). The carriage transition operation will then be stopped.
[BACK] Returns to the DVD test menu screen display.

* This operation will not be performed until the coefficient figures have been received.

[X-3016 DVD 2-Layer Servo. Test(3-0)]

```
[X-3016 DVD 2-Layer Servo.Test(3-0)]
Status : Focus Closed2        Data : 3000 0000
-----------------------------------------------
[1] Tracking Close
[2] CRG + (Start/Stop)    [3] CRG - (Start/Stop)
-----------------------------------------------
T.Bal(Layer 0) : 0000 0000
T.Bal(Layer 1) : 0000 0000
TE Normal(Layer 0) : 0000 0000
TE Normal(Layer 1) : 0000 0000
-----------------------------------------------
Press [OK] to make a selection
Press [BACK]  to DVD-1
```

Test items are basically the same for both DVDs and CDs.

Status : "Focus Close 2 (during normal conditions)."
[1] Performs tracking close operation (proceeds to servo test 4-0).
[3] Moves the carriage (external). The carriage transition operation will then be stopped.
[4] Moves the carriage (internal). The carriage transition operation will then be stopped.
[BACK] Returns to the DVD test menu screen display.

* This operation will not be performed until the coefficient figures have been received.

[X-3016 DVD 2-Layer Servo. Test(4-0)]

```
[X-3016 DVD 2-Layer Servo.Test(4-0)]
Status :Tracking Close        Data : 4000 0000
-----------------------------------------------
[1] Error Rate...1.105E-4    [2] Read Speed: x1.3 CLV
[3] Track Jump+    [4] Track Jump-
[5] Focus Jump    [6] ID Search
[7] Tracking Open (to   Focus Close)
-----------------------------------------------
F.Bal(0) : 0000 0000    F.Gain(0) : 0000 0000
F.Bal(1) : 0000 0000    F.Gain(1) : 0000 0000
T.Gain(0) : 0000 0000    AS Normal(0) : 0000 0000
T.Gain(1) : 0000 0000    AS Normal(1) : 0000 0000
-----------------------------------------------
Press [OK] to make a selection
Press [BACK]  - DVD-1
```

Test items are basically the same for both DVDs and CDs.

Status : "Tracking Close (during normal conditions)."

[1] [OK] triggers measurement of the error rates (other operations can not be performed for approximately 10 seconds.
[2] [OK] triggers switching of the reproduction speed.
[3] Performs track jumping by a designated number of tracks (external).
[4] Performs track jumping by a designated number of tracks (internal).
[5] Performs a focus jump operation (for DVDs only).
[6] Designates an ID (for DVDs only).
[7] Performs a tracking open operation (for the focus close status : will proceed to servo test 2-0).
[BACK] Returns to the DVD test menu screen display.

* This operation will not be performed until the coefficient figures have been received.

Reproduction speeds

L0-layer	DVD x 1.3CLV, CD x 2	4000 0000
L0-layer	DVD x 1CLV	4200 0000
L1-layer	DVD x 1.3CLV	4100 0000
L1-layer	DVD x 1CLV	4300 0000

[X-3016 DVD Servo. Test(4-3)]

```
[X-3016 DVD Servo.Test(4-3)]
Status :Tracking Closed        Data : 4x00 0000
-----------------------------------------------
[1] Track appointment
[2] Start Track Jump+/-



Press [OK] to make a selection
Press [BACK]  to Back
```

Test items are basically the same for both DVDs and CDs.

Status : "Tracking Close (during normal conditions)."

[1] Performs a track number designation (MS3 cyclically switches the available patterns).
[2] Starts the tracking jump operation (will proceed to servo test 4-0).

[X-3016 DVD Servo. Test(4-6)]

```
[X-3016 DVD Servo.Test(4-6)]
Status :Tracking Close        Data : 4A00 0000
-----------------------------------------------
[1] ID appointment : 0000 0000
[2] cursor right
[3] cursor left
[4] cursor up
[5] cursor down
[6] Start ID Search


Press [OK] to make a selection
Press [BACK]  to Back
```

Available for DVDs only.

Status : "Tracking Close (during normal conditions)."

[1] Displays designated ID.
[2] Moves the cursor to the right by one increment.
[3] Moves the cursor to the left by one increment.
[4] Moves the cursor up by one increment.
[5] Moves the cursor down by one increment.
[6] Starts the ID search operation (return to servo test 4-0).

Display data of adjustment value

FE Offset	FE offset coefficient	0000 0000[h] - FFFF FFFF[h]
TE Offset	TE offset coefficient	0000 0000[h] - FFFF FFFF[h]
AS Offset	AS offset coefficient	0000 0000[h] - FFFF FFFF[h]
ENV Offset	ENV offset coefficient	0000 0000[h] - FFFF FFFF[h]
TG Offset	TG offset coefficient	0000 0000[h] - FFFF FFFF[h]
DBAL	DBAL offset coefficient	0000 0000[h] - FFFF FFFF[h]
FE MAX	FE MAX level	0000 0000[h] - FFFF FFFF[h]
FE MIN	FE MIN level	0000 0000[h] - FFFF FFFF[h]
AS MAX	AS MAX level	0000 0000[h] - FFFF FFFF[h]
ENV MAX	ENV MAX level	0000 0000[h] - FFFF FFFF[h]
FE Normal	FE normalize coefficient	0000 0000[h] - FFFF FFFF[h]
S.Gain	Spindle gain coefficient	0000 0000[h] - FFFF FFFF[h]
T.Bal (layer-0)	TBAL coefficient (layer-0)	0000 0000[h] - FFFF FFFF[h]
T.Bal (layer-1)	TBAL coefficient (layer-1)	0000 0000[h] - FFFF FFFF[h]
G.Bal (layer-0)	GBAL coefficient (layer-0)	0000 0000[h] - FFFF FFFF[h]
G.Bal (layer-1)	GBAL coefficient (layer-1)	0000 0000[h] - FFFF FFFF[h]
TE Normal (layer-0)	TE normalize coefficient (layer-0)	0000 0000[h] - FFFF FFFF[h]
TE Normal (layer-1)	TE normalize coefficient (layer-1)	0000 0000[h] - FFFF FFFF[h]
F.Bal (layer-0)	FBAL coefficient (layer-0)	0000 0000[h] - FFFF FFFF[h]
F.Bal (layer-1)	FBAL coefficient (layer-1)	0000 0000[h] - FFFF FFFF[h]
F.Gain (layer-0)	Focus gain coefficient (layer-0)	0000 0000[h] - FFFF FFFF[h]
F.Gain (layer-1)	Focus gain coefficient (layer-1)	0000 0000[h] - FFFF FFFF[h]
T.Gain (layer-0)	Tracking gain coefficient (layer-0)	0000 0000[h] - FFFF FFFF[h]
T.Gain (layer-1)	Tracking gain coefficient (layer-1)	0000 0000[h] - FFFF FFFF[h]
AS Normal (layer-0)	AS normalize adjustment value (layer-0)	0000 0000[h] - FFFF FFFF[h]
AS Normal (layer-1)	AS normalize adjustment value (layer-1)	0000 0000[h] - FFFF FFFF[h]

6.8 USING THE TEST DISC

TEST DISC Part No. : GGV1137

REMOTE CONTROLLER Part No.

Part No.	Description
CXB7427	Co-packed remote controller with AVIC-8DVD/EW
CXB7426	Co-packed remote controller with AVIC-9DVD/EW, UC
CXB9118	Co-packed remote controller with AVIC-8DVD-2/EW, -9DVD-2/EW, -90DVD/UC
CD-R11	Optional remote controller

1. Start/End

1-1. Start

When the test disc is inserted, the title “NN622/NN623 TEST DISC” will be displayed.
If [RETURN] key is pressed while the title is being displayed, the menu screen will be displayed. If no key is pressed, the first screen of the inspection screen for line will be displayed.

Title screen

1-2. End

No action is taken.

2. Key operation

• In the case of inspection screen for line

1. The inspection screen and the menu screen can be switched alternately using the [CR] key on the remote controller.
2. The screen will go back to the previous screen by the [↑] key on the remote controller.
3. The screen will move forward to the next screen by the [↓] key on the remote controller.
   (Unless the inspection is finished, the screen will not move forward. The screen will not move forward, too, if there is an NG item.)

* Refer to the explanation of each screen for the details.

• In the case of service menu screen

1. Select an inspection item by the [↑] and [↓] keys on the remote controller, and inspection screen will appear when the [CR] key is pressed.
2. When the [RETURN] key on the remote controller is pressed, the screen will go back to the menu screen.

* Refer to the explanation of each screen for the details.

Menu screens

```
--- Self Test Menu ---

 1. External Connection
 2. Dual Illumination check
 3. Touch Panel check
 4. Microphone & Gain control
 5. Data Communication (Short)
 6. Data Communication (Open)
 7. Natural Drawing & Rear View

[CR KEY] The selected menu is started.
```

```
--- Self Test Menu ---

 8. VTR In check
 9. FM multiplex tuner error
10. GPS  Self check
11. Software version display
12. Language Flag setup mode
13. Memory all cleay
14. GPS sensitivity measurement

[CR KEY] The selected menu is started.
```

```
--- Self Test Menu ---

15. Picture RGB check
16. GPS information
17. Sound play
18. File Maintenance mode
19. Picture check
20. Device check(Design engineer only)
21. Memory all clear (for Service)

[CR KEY] The selected menu is started.
```

```
--- Self Test Menu ---

22. BackUp Memory clear
23. --------
24. --------
25. --------
26. --------
27. --------
28. --------

[CR KEY] The selected menu is started.
```

3. Inspection screen

1. Connection check

```
1. Connection check
Illumination signal                    ON
Parking brake signal                   ON
Reverse gear signal                    REV
Car speed signal                       0
Gyro                        LEFT   <<  42374
Gyro voltage                      2.434V  OK
delta sigma                          0.6  OK
Battery voltage                     12.3V
G sensor                         ++   58431
G sensor voltage                  1.985V  OK
delta sigma                          0.6  OK
Remote controller                 PRESENT
Mic connect                            ON
[joy stick down] It progresses to the next inspection.
```

- The status of the item indicated in the above figure will be updated every second.
- Set ANTON port to H when starting the inspection and set to L when ending.
- When the gyro is in operation, a BEEP sound will be made when the G sensor is activated.
  Right: 500Hz, Left: 700Hz. Up: 800Hz, Down: 600Hz
- Conditions for moving on to the next inspection
  Illumination status is changing between ON and OFF.
  Parking brake status is changing between ON and OFF.
  Reverse status is changing between NOR and REV.
  Pulse is changing to a value other than 0/0.
  Mic connect status is changing between ON and OFF.
  All keys on the main body as listed below have been pressed at least once.

Standard value for other items
- GYRO voltage
  OK: 2.5±0.15
  USABLE: 2.5±0.30
- GYRO variation
  OK: Less than 30
- G sensor voltage
  OK: 2.5±0.15
  USABLE: 2.5±0.30
- G sensor variation
  OK: Less than 60

- Only when all the conditions are met, you can move on to the next inspection by the [↓] key on the remote controller. It should be noted, however, that you will not be able to move on to the next inspection if there is an error (background color is red) even if the conditions are met.

<Supplemental explanation regarding error display>

Displayed message	Details of the error
Structural data error	An error when data cannot be received from A/D converter. Defective device of the A/D converter seems to be the cause. It will also happen in case the vehicle speed pulse cannot be measured. (rare)
No connection to DRAGON	An error when communication with DRAGON cannot be established. Communication error due to a hardware problem could be the cause. It is highly possible that the hardware on the DRAGON side is defective.
Command error	Time out error for response to BIOS call. Communication error due to a hardware problem could be the cause. It is highly possible that the hardware on the DRAGON side is defective.
Unknown error	Error due to unknown reason.

2. Dual Illumination color check

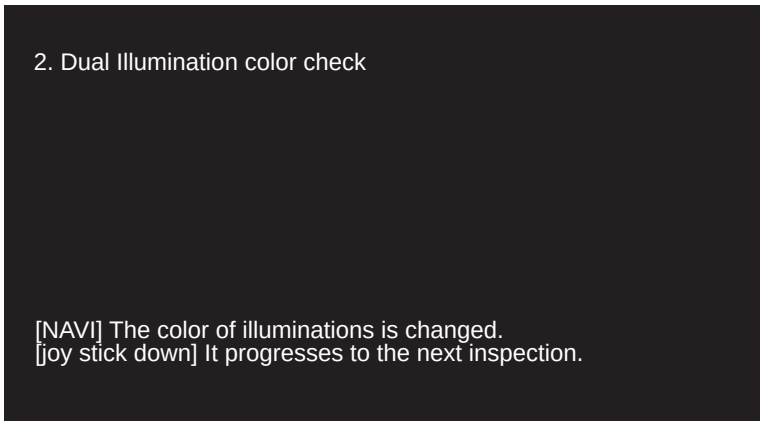

- Color switching for dual illumination can be made.
- In the case of UC model, this inspection will not be performed, and the system will move on to the next inspection.
- Color is changed to GREEN/LED by the [NAVI] key on the remote controller.
- Move on to the next inspection by the [↓] key on the remote controller.

3. Touch Panel check

- Touch panel inspection must be performed at 16 locations.
- If the coordinate obtained by pressing the white spot is within the effective range, it will be determined as OK, and the next white spot will be displayed.
- If the coordinate obtained is outside of the effective range, it will be determined as NG.
- If all 16 locations turned out to be OK, then this test is considered to be OK.
- If coordinate cannot be obtained in approximately 5 seconds after the white spot is displayed, the inspection is determined as NG.
- Only if the inspection is OK, the inspection will move on to the next step by the [↓] key on the remote controller.

4. Microphone & Gain control check

```
4. Microphone & Gain control check

 Gain level(0-7)      7

        REC



[->] raise gain
[<-] lower gain
[joy stick down] It progresses to the next inspection.
```

- The voice channel is inspected by recording the voice from MIC input (Lch) on a memory, playing back the recorded data and outputting from the SP.
- Recording of MIC input voice and playback of the recorded data is done at every second. ("1 second recording → 1 second playback" will be repeated during inspection.) "REC" and "PLAY" will be displayed on the screen during recording and play back, respectively.
- Voice channel
  MIC voice input → ADC Lch input → ASIC voice block → Data storage (recorded on the memory)
  Play back of recorded voice data → ASIC voice block → DAC Lch output → SP output
- Operation (remote controller)
  [←] : MIC input gain (PROGGAIN0-2) is lowered.
  [→] : MIC input gain (PROGGAIN0-2) is increased.
  [NAVI] : Muting of ONSEIMUTE signal is switched between ON and OFF by a toggle switch.
  [↓] : Move on to the next inspection.

5. Data Communication (Short Circuit) check (Not for service)

```
5. Data Communication (Short Circuit) check

Serial  I/O  #5(for Extension)        OK
Serial  I/O  #7(for Debug)            OK



[joy stick down] It progresses to the next inspection.
```

- SIO connection short is checked.
- Loop back check is performed on 5CH and 7CH.
- Wait screen is displayed until the checking is completed.
- When [RETURN] key on the remote controller is pressed while the inspection result is being displayed on the screen, inspection will be performed once again.
- Only in the case of OK, you can move on to the next inspection by the [↓] key on the remote controller.

6. Data Communication (Open Circuit) check (Not for service)

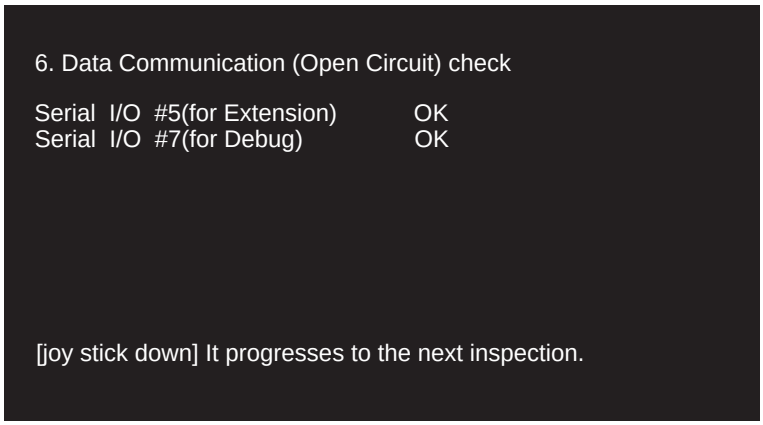

- SIO connection open is checked.
- Check is performed on 5CH and 7CH.
- Do not connect anything to the terminal. OK will be indicated under “open” condition.
- Wait screen is displayed until the checking is completed.
- When [RETURN] key on the remote controller is pressed while the inspection result is being displayed on the screen, inspection will be performed once again.
- Only in the case of OK, you can move on to the next inspection by the [↓] key on the remote controller.

7. Natural Drawing & Rear View

- Natural image consisting of 256 colors will be drawn on the BG screen.
- ADPCM 1kHz sine wave at the sampling rate of 19kHz will be output for 30 seconds.
- Rear view image will be displayed on the right hand side of the screen.
- GUIDEON terminal will be set to H when entering the screen, and set to L when exiting the screen.
- Volume level can be changed by the [←] and [→] keys on the remote controller. (0 to 9)
  [JPEG file name: ZHITO1.JPEG]
  [Voice file name: A19K01KS.WAV]
- You can move on to the next inspection by the [↓] key on the remote controller.

8. VTR check

8. VTR check

[joy stick down] It progresses to the next inspection.

- External input image (VTR input image) is displayed and voice is outputted.
- You can move on to the next inspection by the [↓] key on the remote controller.

9. FM multiplex tuner error rate measurement

9. FM multiplex tuner error rate measurement

Push Back key to go to re-check.

FM Frequency	87.50
Frequency to check	87.50
Blocks Received Correctly	0500
Blocks with one bit corrected	0000
Blocks with two bits corrected	0000
Blocks Received with error	0000

[<- -> to adjust FM frequency]
[joy stick down] It progresses to the next inspection.

- FM multiplexing error is measured.
- In the case of UC model, this inspection is not performed and the system will move on to the next inspection.
- Default frequency is 87.5MHz.
- When entering this mode for the first time, the result of measurement at the time of test disc boot up will be displayed.
- After the measurement is taken, the frequency can be changed by the [←] and [→] keys.
- 500 blocks will be measured, and if there are 450 or more blocks without error, then it will be determined as OK.
- Only in the case of OK, you can move on to the next inspection by the [↓] key on the remote controller.

10. GPS Self check

```
10. GPS Self check
                                    2002/12/12 15:35:23
Using satellites NO.
 01  02  03  04  05  06  07  08
 Antenna connection                                  OK
 Receiving signal level                            13.5
 Latitude                                   3D  35  55  47.1
 Longitude                                     139  28  30.0


 [joy stick down] It progresses to the next inspection.
```

- GPS receiving status will be displayed.
- Conditions to move on to the next inspection.
  Antenna connection is OK.
  Data is received from one or more satellite.
  Time is being displayed.
- When all the conditions are met, the background color will change to blue.
- Only when all the conditions are met, you can move on to the next inspection by the [↓] key on the remote controller.

It should be noted, however, that you will not be able to move on to the next inspection if there is an error (background color is red) even if the conditions are met.

<Supplemental explanation regarding error display>

Displayed message	Details of the error
No connection to DRAGON	This is an error when communication with DRAGON is not established. Communication error due to a hardware problem could be the cause. It is highly possible that the hardware on the DRAGON side is defective.
Command error	Time out error for response to BIOS call. Communication error due to a hardware problem could be the cause. It is highly possible that the hardware on the DRAGON side is defective.
Invalid data	This is an error when request is made while the data for response is not prepared (not obtained from DRAGON). Communication error due to a hardware problem could be the cause. It is highly possible that the hardware on the DRAGON side is defective.

11. Software version

```
11. Software version
   System boot version          1.00
   System OS version            1.00
   Syscon version               6.11
   TV ucom version              7.06
   Monitor ucom version         6.04
   Drive core version           9.22
   Drive apl version            8.21
   GPS program version          5.02   03/09/09    3.60
   GPS model                    04EW  DVD (0x22)
   HydeAway model               04EW  DVD
   Region code                  2
   [joy stick down] It progresses to the next inspection.
```

- It indicates the version information of the software.
- As for the “GPS model”, it will be considered OK if either “04EW DVD” or “04UC DVD” is displayed.
- As for the “Hide away model”, it will be considered OK if either “04EW DVD” or “04UC DVD” is displayed.
- As for the region code, it will be considered OK if “2” is displayed in the case of EW model and if “1” is displayed for UC model.
- When “GPS model”, “Hide away model” and “region code” are all OK, you can move on to the next inspection by the [↓] key on the remote controller.

12. Language selection flag initialize

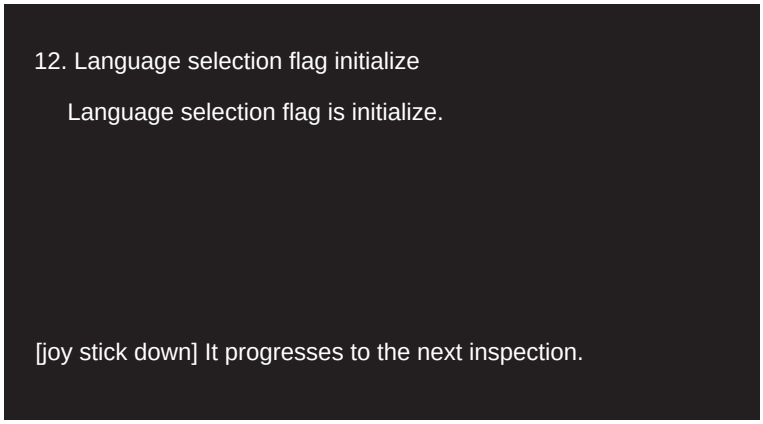

- When the system enters into this inspection, language selection will be set to the original setting made at the time of shipment (i.e. no setting).
  * The setting is made to display the screen for selecting the language to be used at the initial boot up after the shipment out of the factory.
- The setting is made when the system enters into this inspection.
- You can move on to the next inspection by the [↓] key on the remote controller.

13. All memory clear (Not for service)

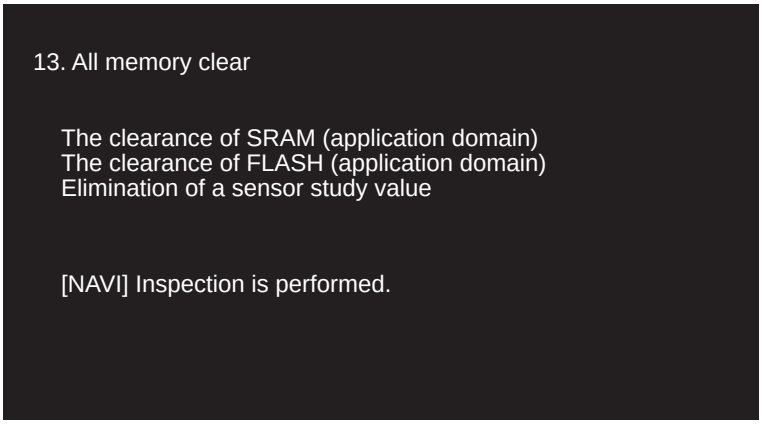

- SRAM (application domain) is cleared.
- FLASH (application domain) is cleared.
- Sensor learning level is cleared.
- If SRAM clear is not successful, FLASH will not be cleared.
- After the inspection screen is displayed, the above process is executed by the [NAVI] key on the remote controller.
- The result of the process is displayed.
- Only when everything is OK, you can move on to the next inspection by the [↓] key on the remote controller.

14. GPS sensitivity measurement

14. GPS sensitivity measurement
Satellite NO. 3 [<- -> to select satellite]

CH.	Look	SNR(AMU)	SNR(dB)
1	OK	12.3	23.4
2	OK	12.3	23.4
3	OK	12.3	23.4
4	OK	12.3	23.4
5	OK	12.3	23.4
6	OK	12.3	23.4
7	OK	12.3	23.4
8	OK	12.3	23.4
ALL	OK	Sensitivity:	20.4(db)
		DoppRMS:	1.78(Hz)

[joy stick down] Raw work inspection is ended.

- GPS can be changed by the [←] and [→] keys on the remote controller.
- Sensitivity of the selected GPS is displayed by the [RETURN] key on the remote controller.
- Production engineering inspection is ended and service menu is displayed by the [↓] key on the remote controller.

<Supplemental explanation regarding error display>

Displayed message	Details of the error
No connection to DRAGON	This is an error when communication with DRAGON is not established. Communication error due to a hardware problem could be the cause. It is highly possible that the hardware on the DRAGON side is defective.
Command error	Time out error for response to BIOS call. Communication error due to a hardware problem could be the cause. It is highly possible that the hardware on the DRAGON side is defective.

15. Picture RGB check

- RGB bridge is inspected.
- The screen can be switched by the [←] and [→] keys on the remote controller.
- RGB is drawn in the pattern of R 100% → R 50% → G 100% → G 50% → B 100% → B 50%.
- Total of 6 screens will be displayed.

16. GPS information

```
16. GPS information
  0D   T2   H25.5   V25.5                    01/03/28 23:05:47
  SV    Azi    Ev   SNR    Flag   Acc   Doppler    SrchW
  10    119    39   3.0    UY--    3      -2249     2883
  26     25    60   4.9   UYC-     2      -1051     3496
  18    310    25   0.0    ---m    f         +0    12487
  23    305    33   0.0    ---m    f         +0    21812
  17    317    49   0.0    ---m    f         +0    21812
   9    196    56   0.0    ---m    f         +0    21812
  14    260    73   0.0    ---m    f         +0     5994
   4    142    81   0.0    ---m    3         +0     5994

Position  Sv Stat  Ver & Diag  Err Info
```

- ”Position information” will be displayed when the cursor is at the “Position” position and the [CR] key is pressed on the remote controller.
- “Status information” will be displayed when the cursor is at the “Sv Stat” position and the [CR] key is pressed on the remote controller.
- “Diagnosis information” will be displayed when the cursor is at the “Ver&Diag” position and the [CR] key is pressed on the remote controller.
- “Error information” will be displayed when the cursor is at the “Err Info” position and the [CR] key is pressed on the remote controller.
- When an inspection is performed, “status information” (the screen shown above) will be displayed first.

17. Voice play back

```
17. Sound play
   ADPCM fixation 11K 1K L
   ADPCM fixation 11K 1K mono
   ADPCM fixation 11K 1K R
   ADPCM fixation 11K 1K ste
   ADPCM fixation 19K 1K L
   ADPCM fixation 19K 1K mono
   ADPCM fixation 19K 1K R

  Main fader Vol.[0-15]          6

  [-> Vol up, <- Vol down]
  [return] It returns to a menu screen.
```

- Voice file (WAVE format) will be played back.
- The voice selected by the [CR] key on the remote controller will be played back.
- Volume level can be changed by the [←] and [→] keys on the remote controller.

18. File maintenance

```
18. File maintenance
Totale Capacity :   216.5K  Remain :   216.3K
Media:SRAM: Path:
   LOGINFO.CFG 20            84 02 / 08 / 07  17:35
   LOCPOS .DAT 20            68 01 / 01 / 01  21:22



[1]Media  [2]Copy  [3]Delete  [4]Dump  [0]Help
```

• File can be copied, deleted or dumped.
Refer to HELP for “how to use” each function.

19. Picture check MENU

```
19. Picture check MENU        1/2

   1. Plane
   2. Color Bar
   3. Cross Hatch
   4. Sweep
   5. Step
   6. Ramp
   7. Window
   8. Mono Scope
   9. Vertical Resolution Column

   [Push OK to make a selection]
   [return] It returns to a menu screen.
```

A pattern is selected by the [↑] and [↓] keys and an image is displayed by the [CR] key.

1. Plain
   ...Display is made in the order of black, blue, red, pink, green, light blue, yellow and white by the [←] and [→] keys operation on the remote controller.
2. Color bar
   ...White, yellow, light blue, green, pink, red, blue, black bars will be displayed from left to right.
3. Cross hatch
4. Sweep
5. Step
6. Lamp
7. Window
8. Mono scope
9. Cycle line 1
10. Cycle line 2
11. Horizontal stripe 1
12. Horizontal stripe 2
13. Chinese character pattern
14. Map (map.jpg)
15. Natural image (nature.jpg)
16. Portrait 1 (hito1.jpg)
17. Portrait 2 (hito2.jpg)

20. Device Check

```
20. Device Check

  1. SDRAM (0X48000000  -  0X4BFFFFFF)
  2. SRAM  (0X42000000  -  0X4203FFFF)
  3. ASIC  (0X43000270  -  0X43000274)
  4. ALL Device

  [return] It returns to a menu screen.
```

- The above devices will be inspected for engineering purpose.
- A device is selected by the [↑] and [↓] keys on the remote controller, and cleared by the [CR] key.
- On each device screen, a pattern is selected by the [↑] and [↓] keys on the remote controller, and inspection is started by the [CR] key on the remote controller.

21. All memory clear (for Service)

```
21. All memory clear (for Service)

  The clearance of SRAM (application domain)
  The clearance of FLASH (application domain)

  [NAVI] Inspection is performed.
  [return] It returns to a menu screen.
```

- SRAM (application domain) is cleared.
- FLASH (application domain) is cleared.
- If SRAM clear is not successful, FLASH will not be cleared.
- After the inspection screen is displayed, the above process is executed by the [NAVI] key on the remote controller.
- The result of the process is displayed.

22. Initialization of a backup variable

```
22. Initialization of a backup variable

  A backup variable is initialized.

Cautions
  System reset is carried out after initialization.

[NAVI] A backup variable is initialized.
[return] It returns to a menu screen.
```

- Back up variables are initialized by the [NAVI] key on the remote controller for system reset.
- The screen will return to the menu screen by the [RETURN] key on the remote controller.

7. GENERAL INFORMATION

7.1 DIAGNOSIS

7.1.1 DISASSEMBLY

● **Removing the Grille Assy (Fig.1)**

1 Remove the two screws and then remove the Holder.
Disconnect the connector.

2 Remove the two screws and then remove the Grille Assy.

● **Removing the Case**

3 Remove the five screws.(Fig.1)

4 Remove the screw and then remove the Case.(Fig.1)

Note) Inside the product there is a flexible substrate that connects the Case and the Bracket.
Be very careful and do not give it a strong pull when removing the Case, otherwise it may be torn.

5 Remove the four screws. (Fig.2)

Disconnect the connector and then remove the Bracket. (Fig.2)
Remove the Case.(Fig.1)

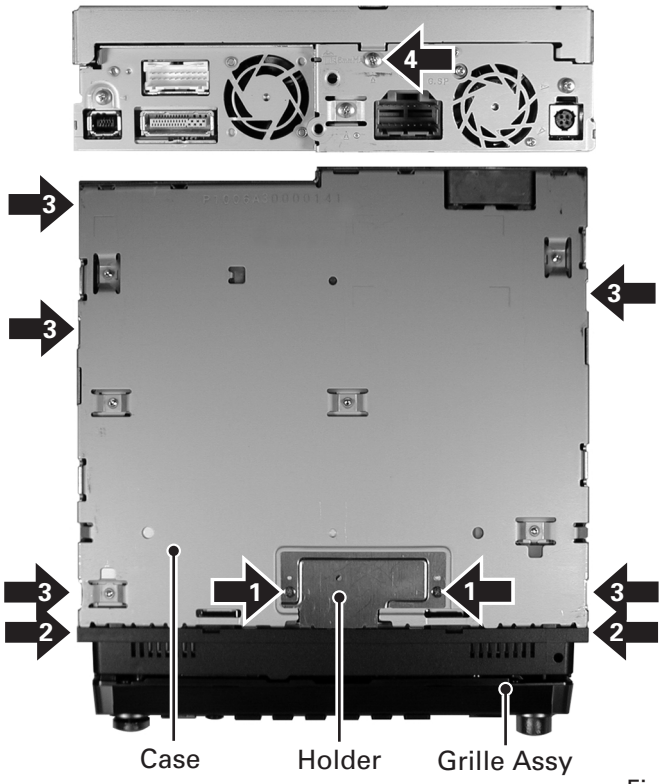

Fig.1

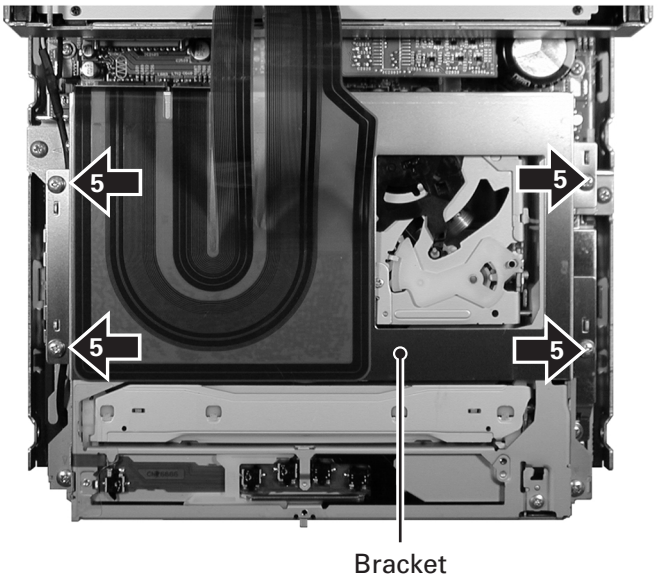

Fig.2

● **Removing the DVD Mechanism Module (Fig.3)**

1 Remove the four screws.

Disconnect the connector and then remove the DVD Mechanism Module.

● **Removing the Relay PCB (Fig.3)**

2 Straighten the tab at location indicated.

3 Remove the two screws.

Disconnect the connector and then remove the Relay PCB.

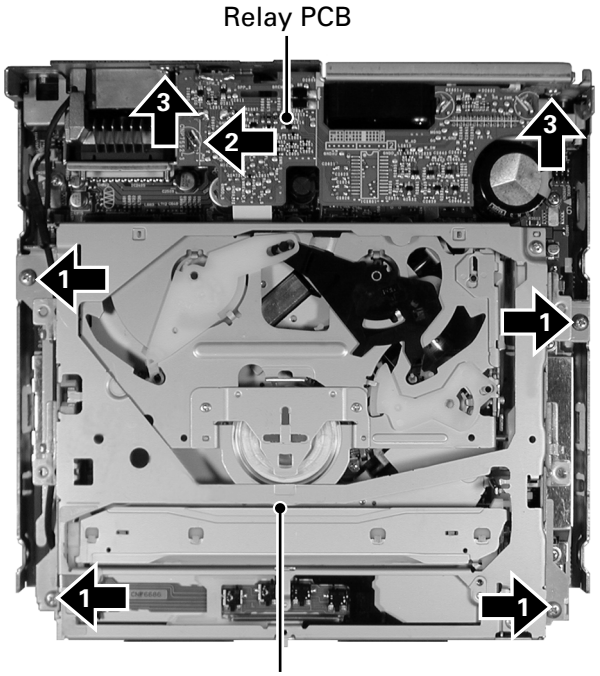

Fig.3

● **Removing the CC Unit (Fig.4)**

1 Remove the screw.

2 Remove the three screws and then remove the Bracket.

3 Remove the six screws and then remove the CC Unit.

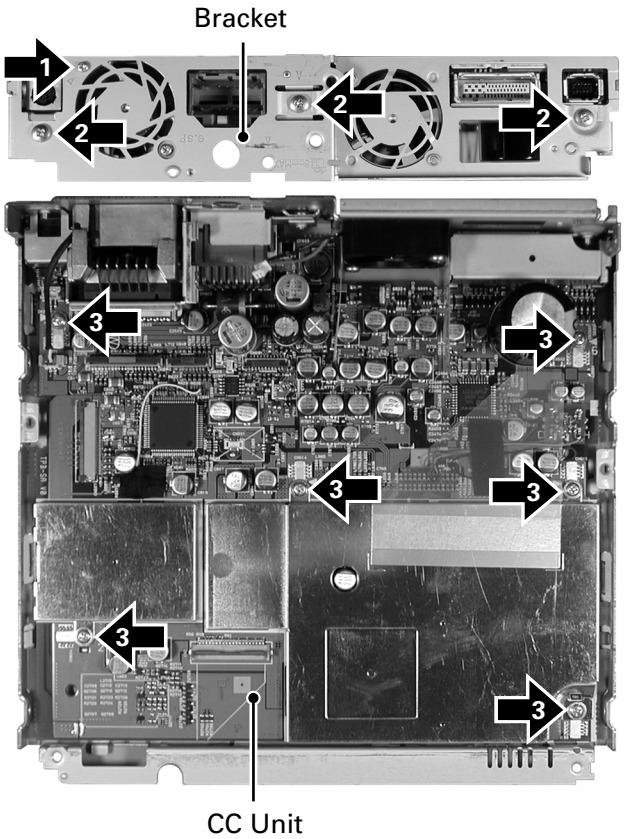

Fig.4

● Removing the Case (Fig.5)

1. Remove the two screws and then remove the Holder.
2. Remove the screw.
3. Remove the five screws and then remove the Case.

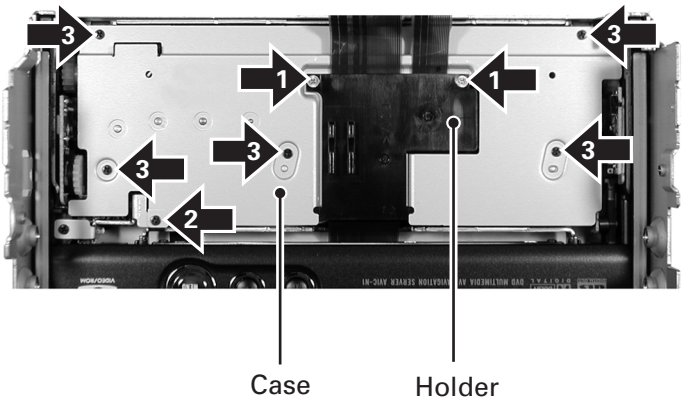

Fig.5

● Removing the Display Assy (Fig.6)

1. Remove the screw.

Disconnect the connector and then remove the Motor Unit.

2. Remove the two screws and then remove the two Holders.
3. Pull out the Display Assy in the arrow indicated direction.

Note) When reassembling, hold the switch down with tweezers or the like and put the Display Assy back to the Chassis. Otherwise, the switch may be damaged and not function properly.

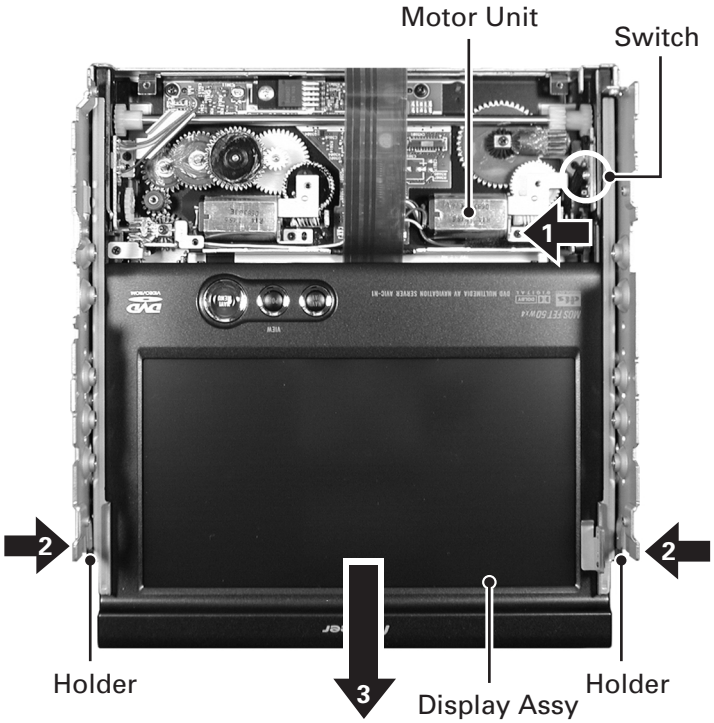

Fig.6

● Removing the Main Unit (Fig.7)

1. Remove the screw and then remove the Bracket.
2. Remove the four screws and then remove the Shaft Unit.
3. Remove the three screws.

Disconnect the connector and then remove the Main Unit.

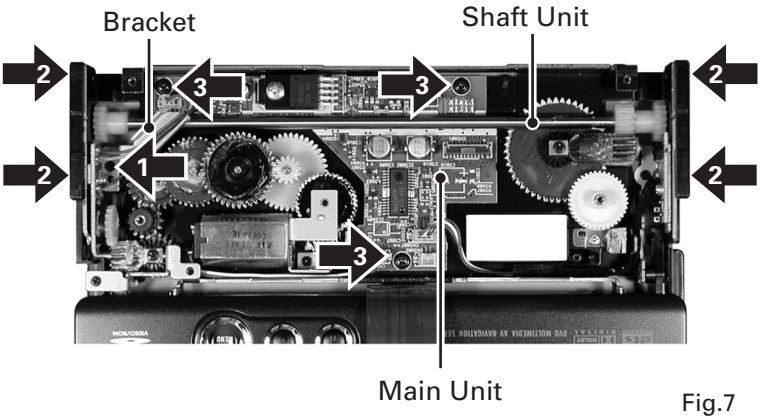

Fig.7

● **Removing the Display Assy (Fig.8)**

1 Remove the two screws and then remove the Holder.

2 Remove the three screws and then remove the Cover Unit.

3 Remove the four screws.

Disconnect the connector and then remove the Display Assy.

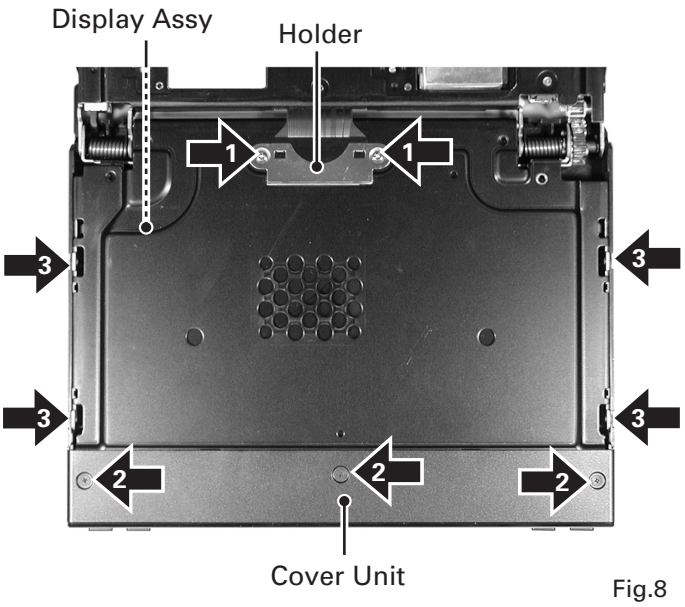

Fig.8

● **Removing the Monitor PCB (Fig.9)**

1 Straighten the tabs at two locations indicated.

2 Remove the screw.

Disconnect the connector and then remove the Monitor PCB.

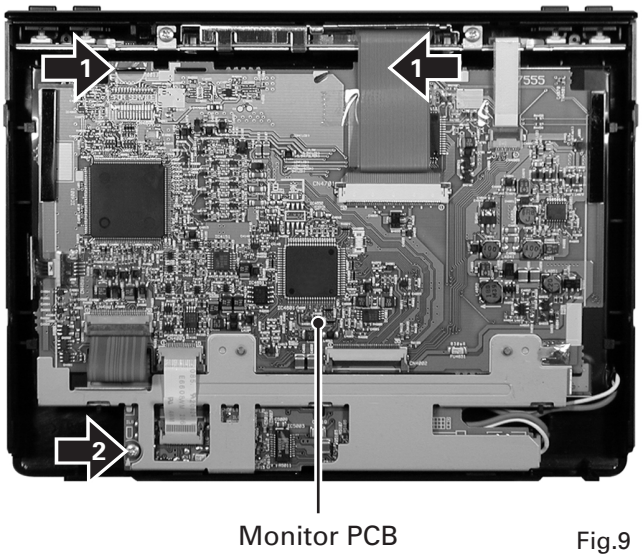

Fig.9

● Removing the Case (Fig.10)

1 Remove the nine screws and then remove the Case.

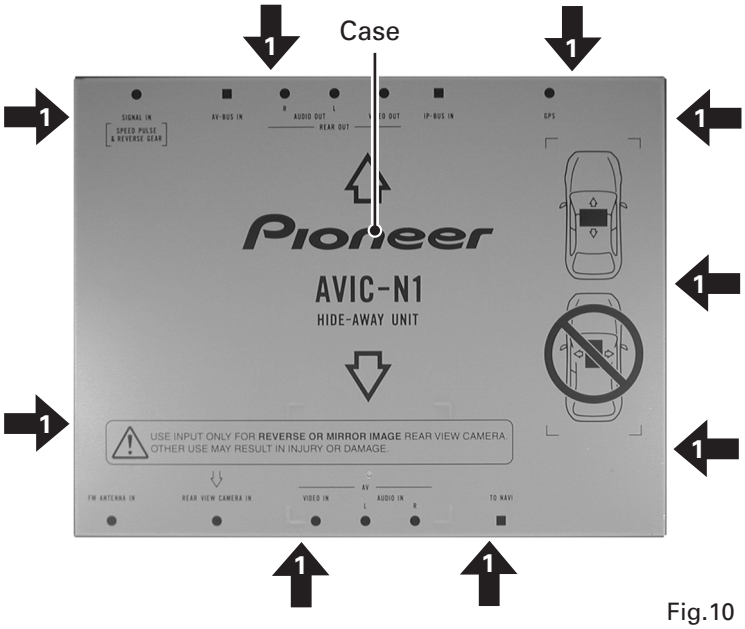

Fig.10

● Removing the Mother Tuner Unit (Fig.11)

1 Remove the four screws.

Disconnect the connector and then remove the Mother Tuner Unit.

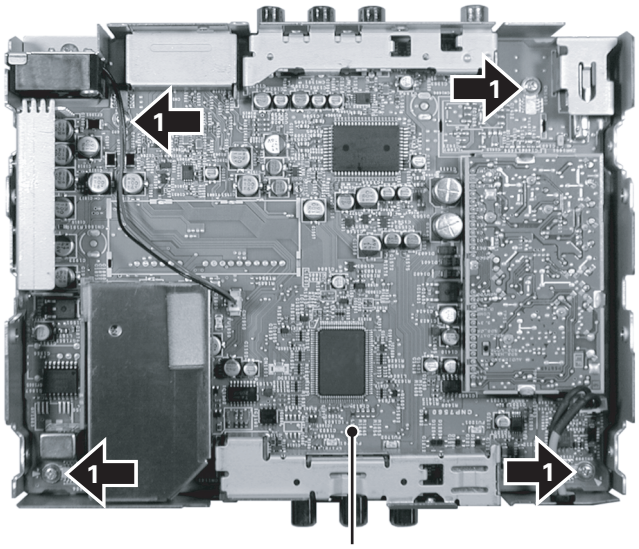

Fig.11

● Precautions on handling the mechanism module

1. Hold the upper and main frames.
2. Do not hold the front portion of the upper frame. It is a delicate part.
3. Do not touch the switches on the top panel.
4. Be careful not to catch the flexible cables.

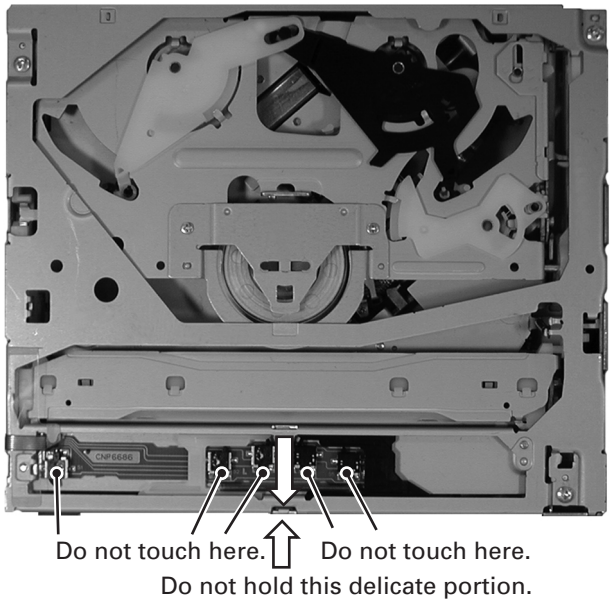

● Removing the DVD Core Unit(MS3)

1. Set the mechanism to the lock position (disc load standby position).
2. Place the mechanism module upside down.
3. Short the two lands on the pickup flexible cable as shown below.
4. Be sure to disconnect the pickup flexible cable and the CRG flexible cable from the connectors to protect them from damages.
5. Remove solder from the load motor leads and clamp SW leads.
6. Loosen the two fixing screws. Lift the position A of the DVD Core Unit lightly and move it in the direction B to remove it. Be careful not to damage the flexible cable C.
7. Disconnect the 8/12 detection flexible-cable from the connector.

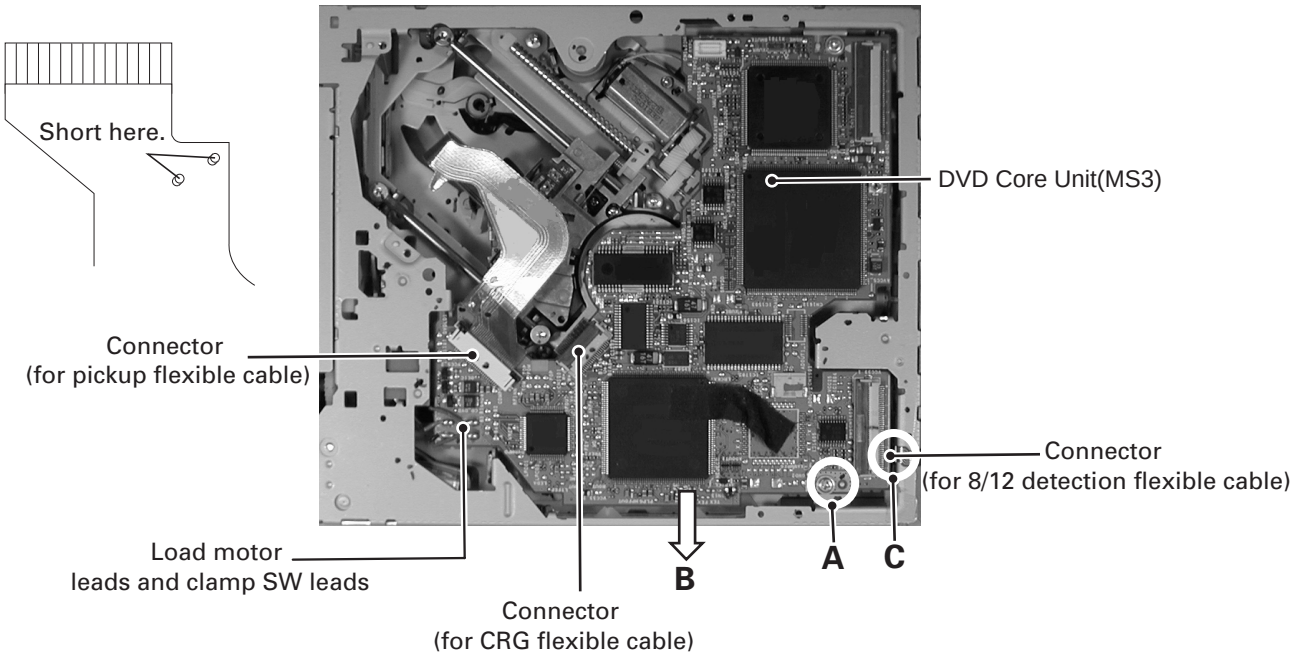

● Removing the Pickup Unit

1. Remove the module pc board in accordance with the procedure of "Removing the module pc board."
2. While holding the pickup case, remove the Skew screw (main).
3. Lifting the end of the pickup rack, slide the main shaft, and remove the Pickup Unit.

Notes:

Replacing the pickup unit requires the skew adjustment.
Remove glue from both ends of the main and sub shafts, and skew stud.
Do not reuse the old skew screw. Be sure to use a brand-new skew screw supplied with a new Pickup Unit.
Fix the skew screw with Screw lock (GYL1001) after adjustment.

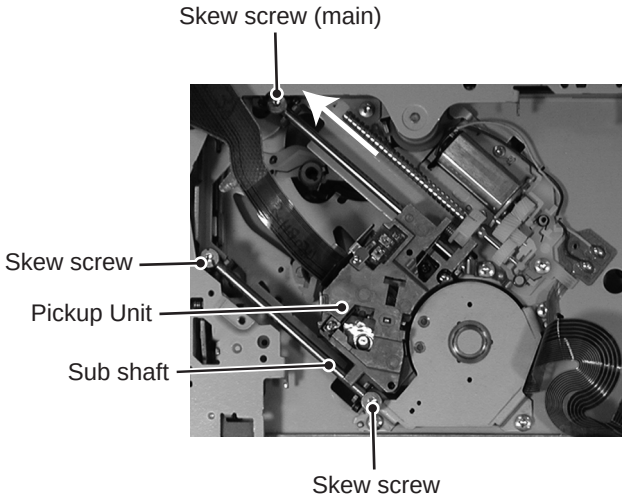

● How to install the Volume Unit fo the Drive Unit

When install the Volume Unit, adjust the positioning of the rotating angle of the gear.

1. Set the Monitor Unit horizontally with the Main Unit of the Drive Unit.

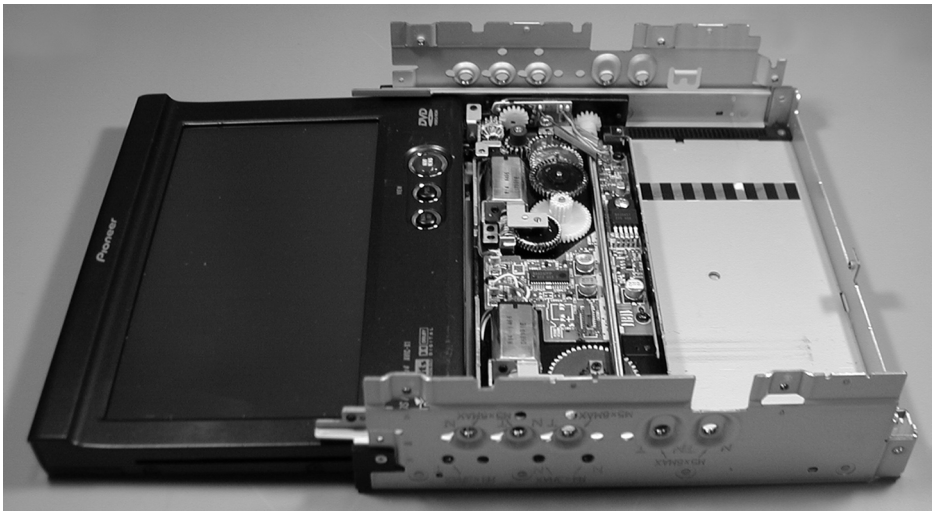

2. When install the gear unit, rotate the gear by hand until the square box of the gear keeps in a horizontal position like the figure below.

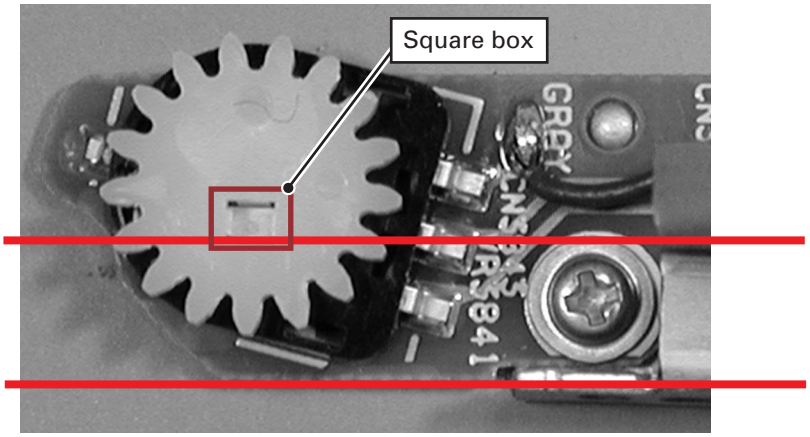

*Gap of one teeth is acceptable.

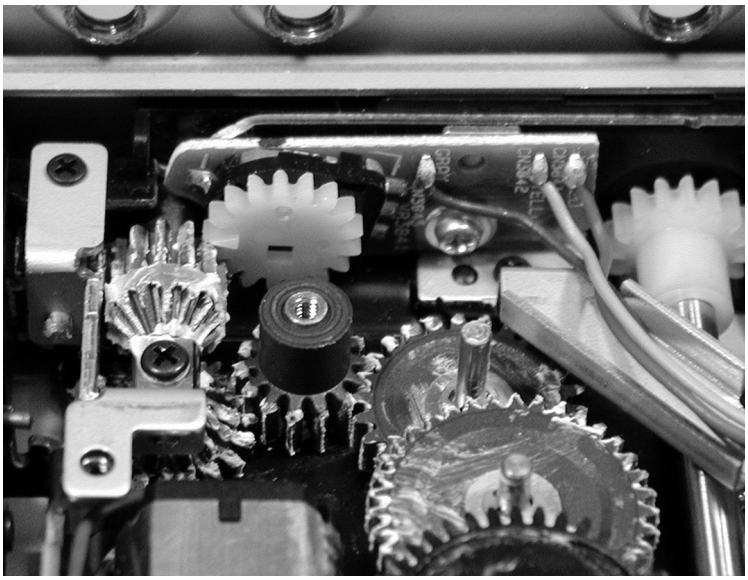

7.1.2 PCB LOCATIONS

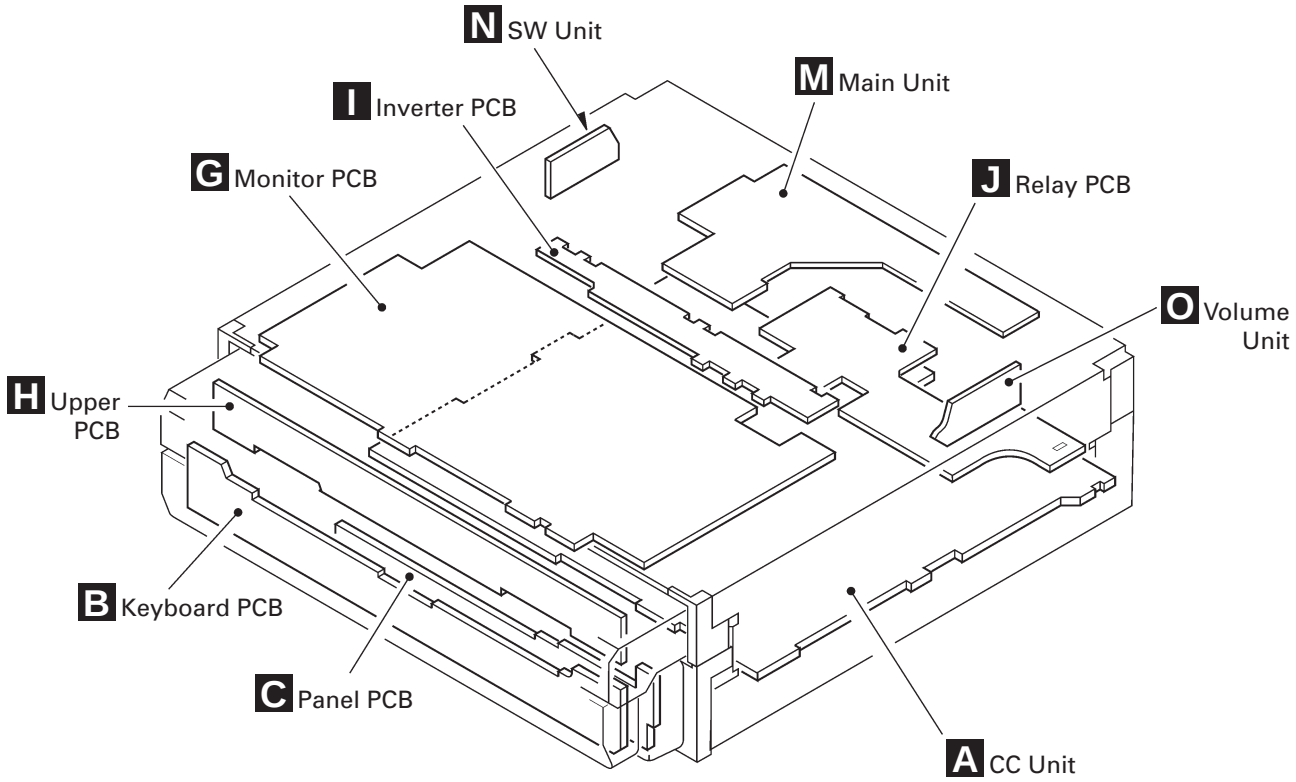

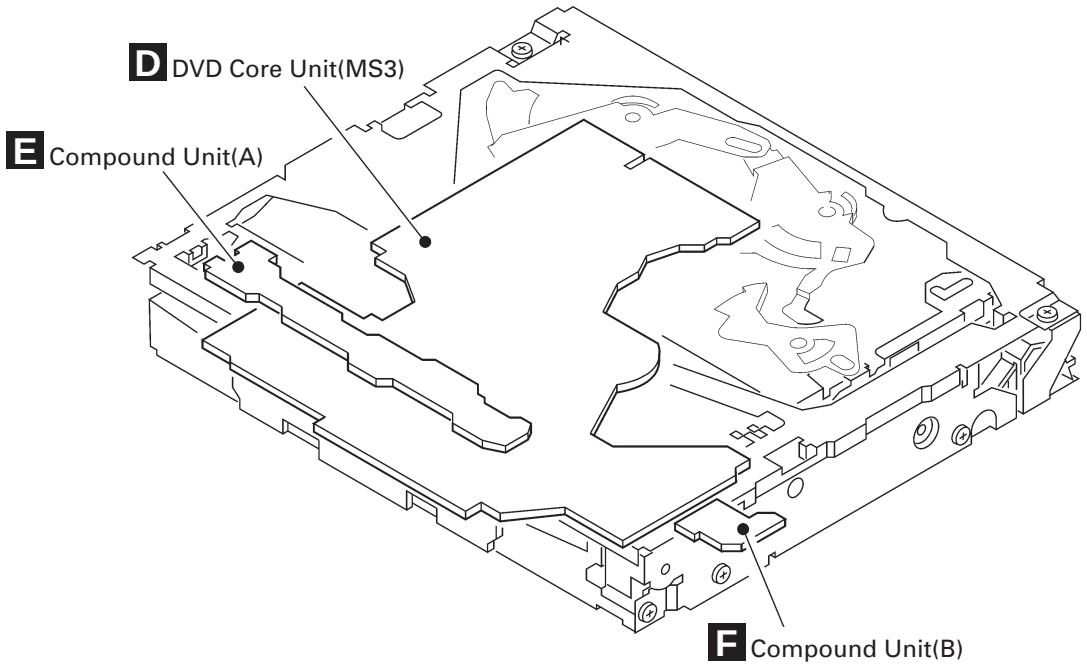

7.1.3 CONNECTOR FUNCTION DESCRIPTION

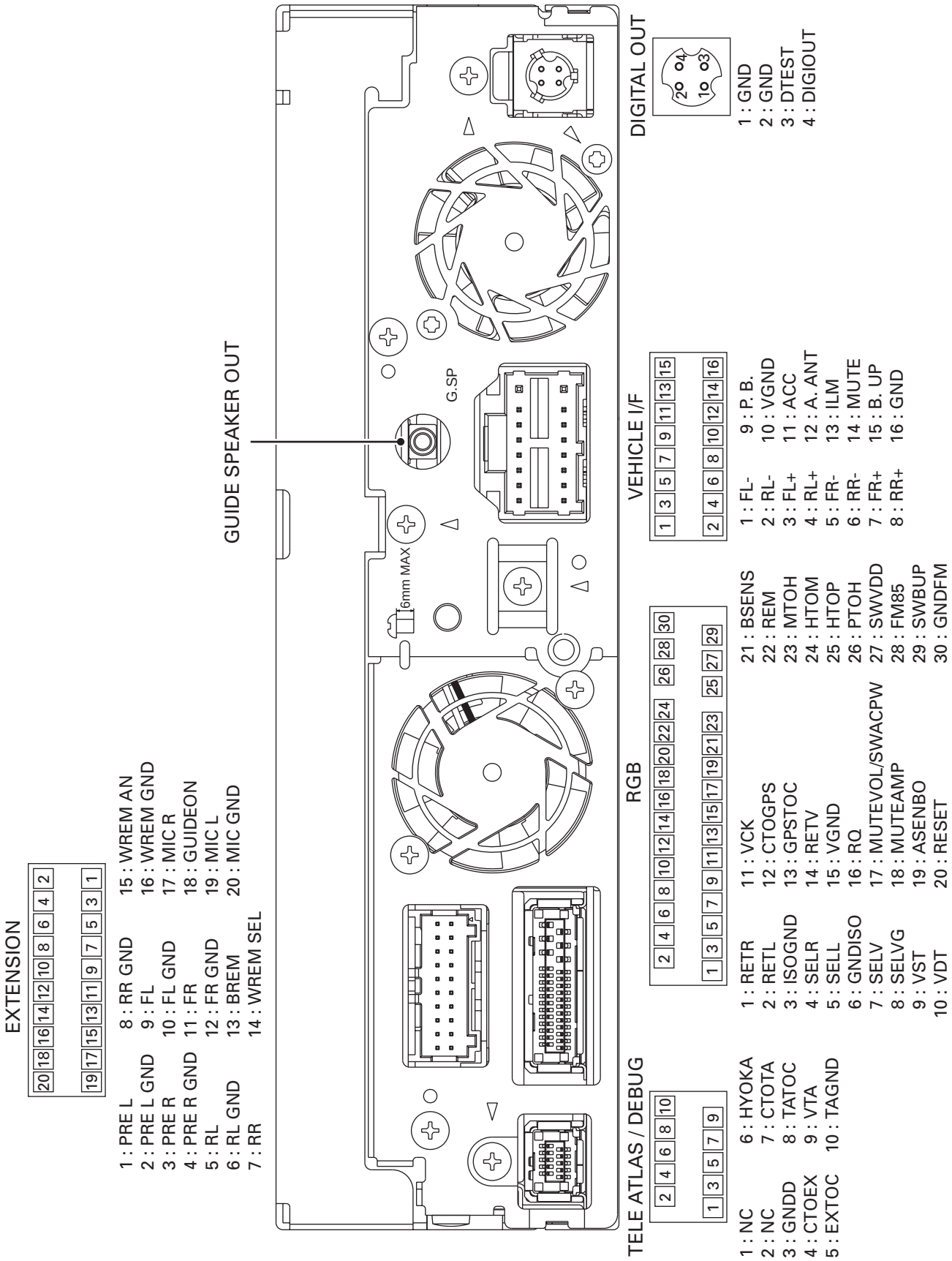

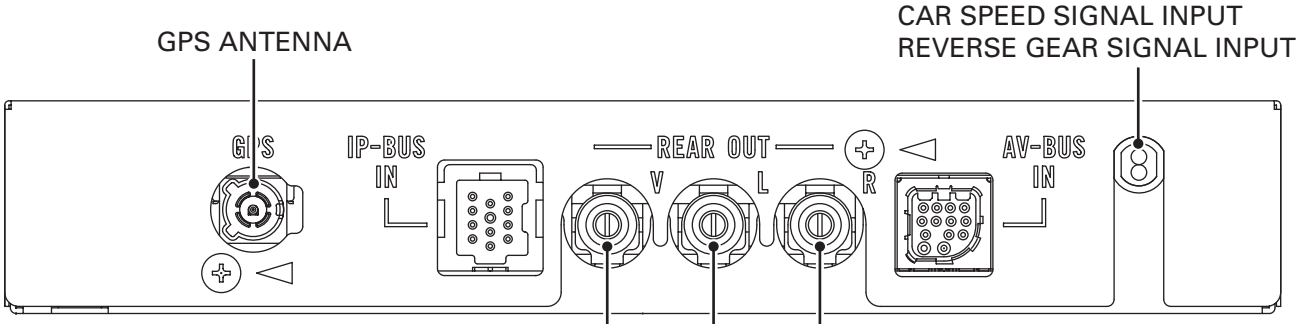

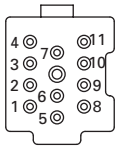

VIDEO OUTPUT
AUDIO L OUTPUT
AUDIO R OUTPUT

1. BUS+
2. BUSG
3. LG
4. NC
5. BUS-
6. BUSC
7. BUSL
8. ASENB
9. BUSR
10. BUSRG
11. BUSLG

1. VIDEO GND
2. COMP VIDEO
3. NC
4. IP-SEL1
5. IP-SEL2
6. LED-V
7. GND
8. BEEP MUTE
9. BEEP-
10. REMOUT
11. NEW AV SENS
12. AV ON
13. BEEP+

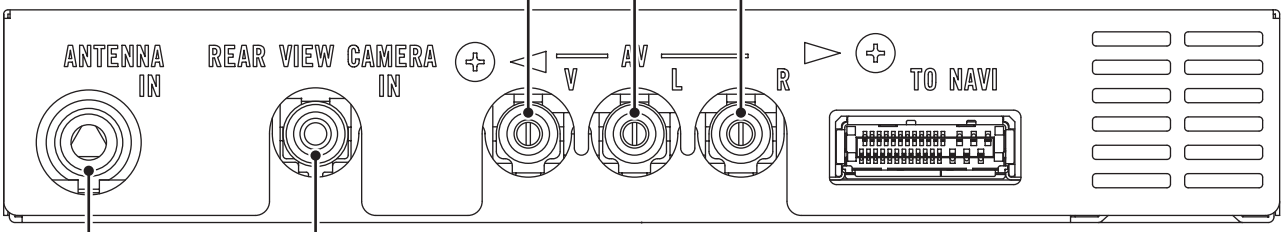

ANTENNA

REAR VIEW CAMERA

RGB

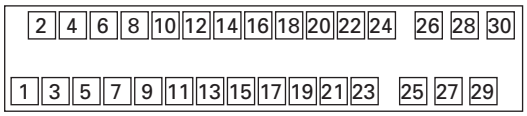

1 : RETR
2 : RETL
3 : ISOGND
4 : SELR
5 : SELL
6 : GNDISO
7 : SELV
8 : SELVG
9 : VST
10 : VDT
11 : VCK
12 : CTOGPS
13 : GPSTOC
14 : RETV
15 : VGND
16 : RQ
17 : MUTEVOL/SWACPW
18 : MUTEAMP
19 : ASENBO
20 : RESET
21 : BSENS
22 : REM
23 : MTOH
24 : HTOM
25 : HTOP
26 : PTOH
27 : SWVDD
28 : FM85
29 : SWBUP
30 : GNDFM

7.2 PARTS

7.2.1 IC

AK4351VT
AK5381VT
HY57V561620CLT-H
K4S561632E-TL75
PD6466A(UC model)
PD6461A(EW model)
PD6467A(UC model)
PD6462A(EW model)
MB86291APFVS-G-DL
S-L2980A33MC-C6S
NJM2561F1
PD6336B
PD5937A
PD3390A
LC72720YVS(EW model)
SBX3050-01
PD6473A(UC model)
PD6472A(EW model)
PD6340A
PE5413A
S-80835CNNB-B8U
SI6544DQ
TK15404AMI
S-93C46BR0I-J8T1
R1224N102H
HA12240FP
S-L2980A50MC-C7J
S-812C33AMC-C2N
PE5412A(UC model)
PE5411A(EW model)

AK4351VT

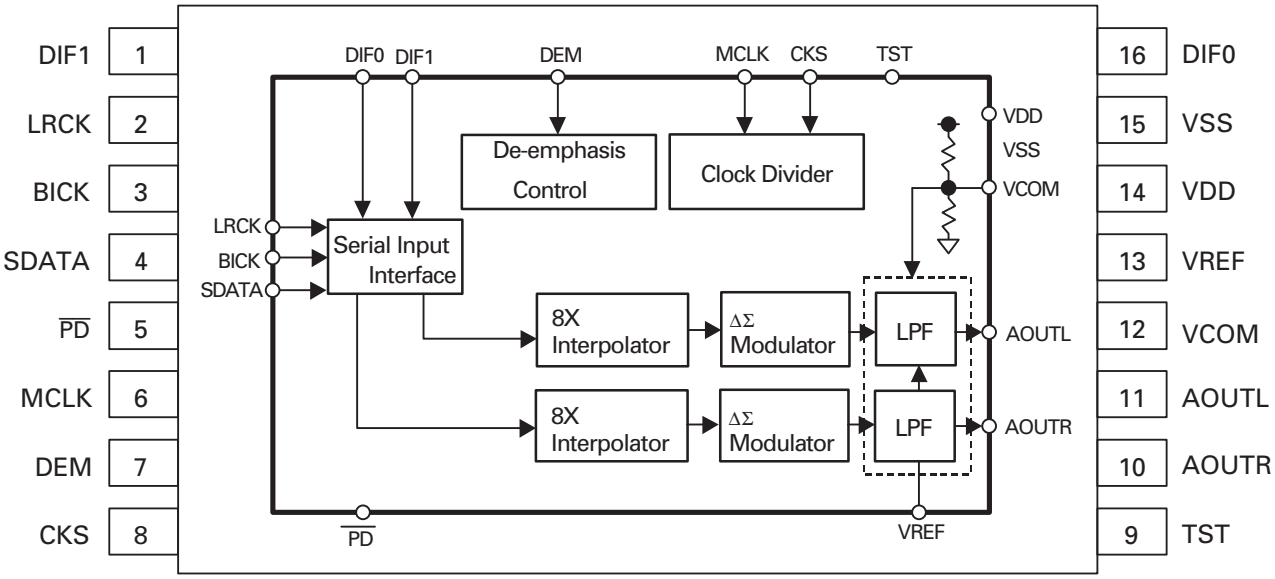

AK5381VT

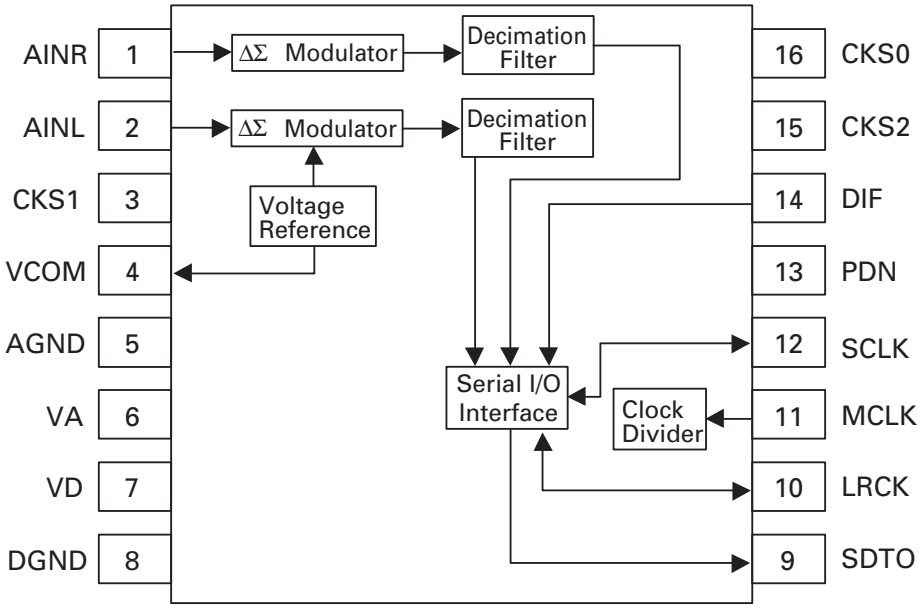

IC's marked by * are MOS type.
Be careful in handling them because they are very liable to be damaged by electrostatic induction.

* HY57V561620CLT-H

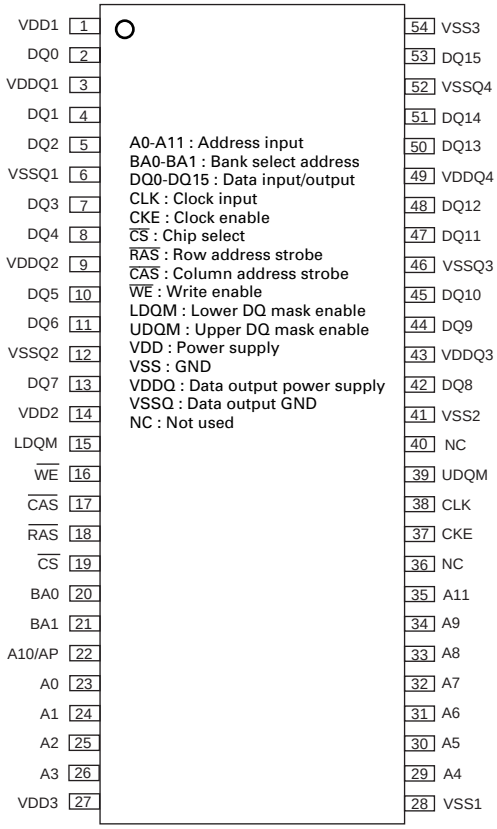

* K4S561632E-TL75

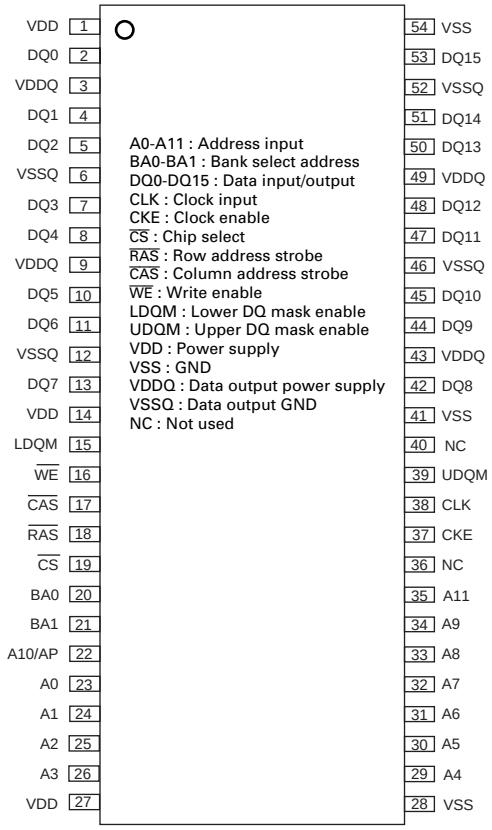

* PD6466A(UC model)
* PD6461A(EW model)

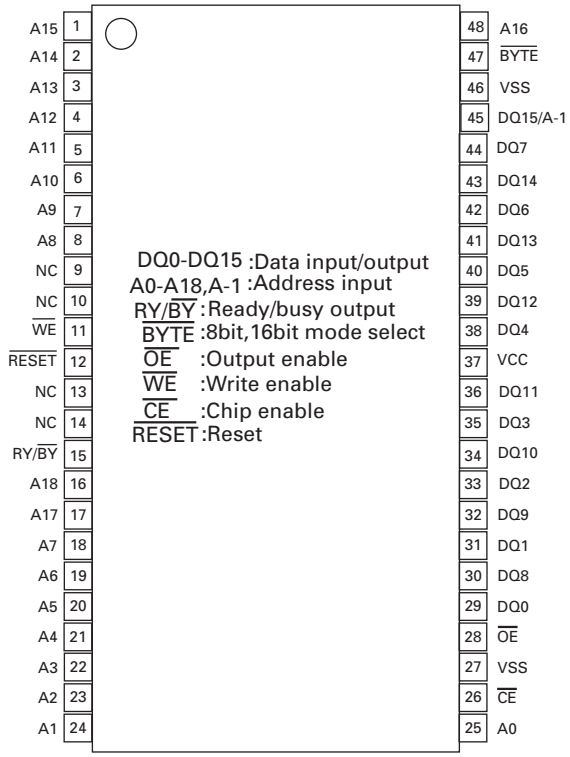

* PD6467A(UC model)
* PD6462A(EW model)

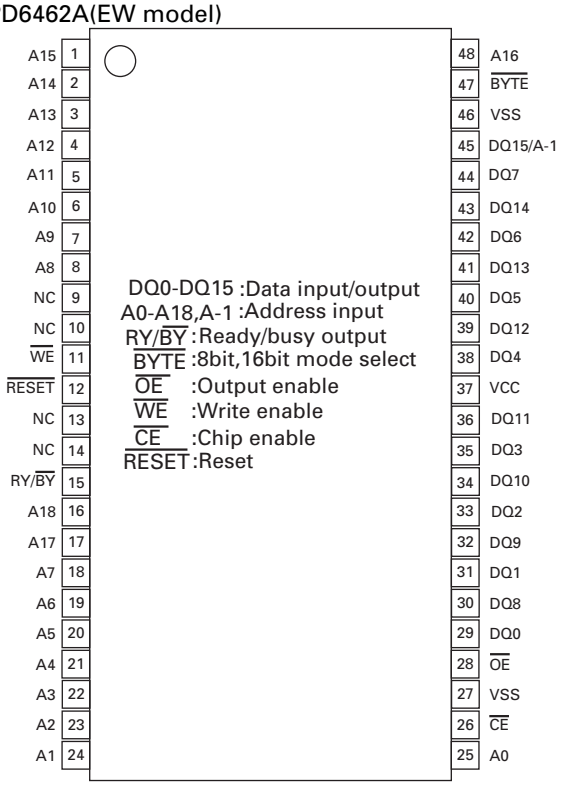

* MB86291APFVS-G-DL

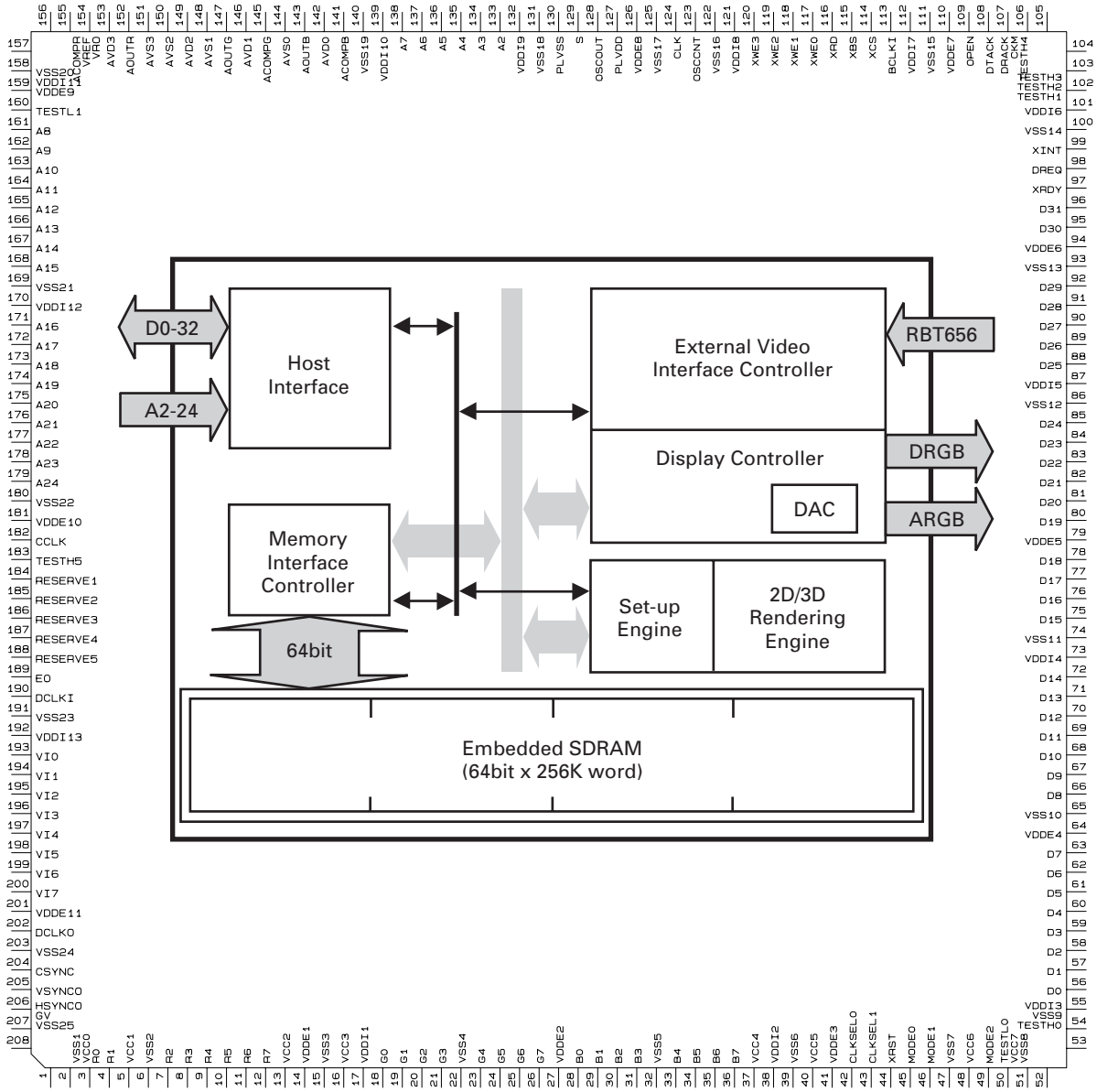

* S-L2980A33MC-C6S

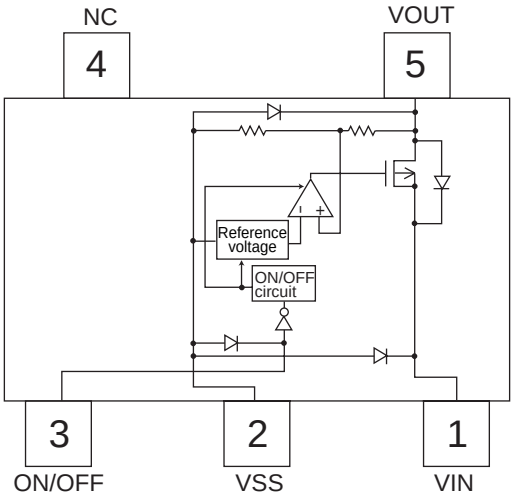

NJM2561F1

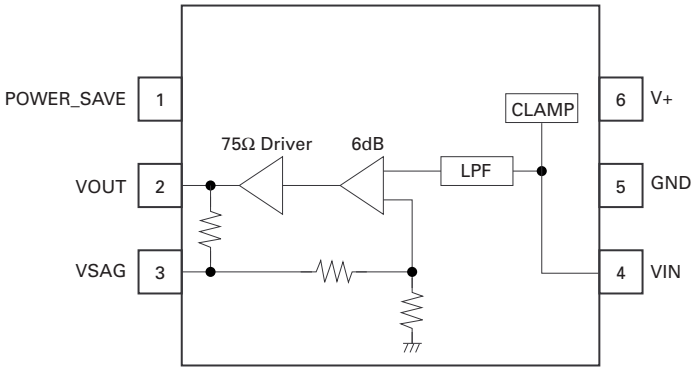

* PD6336B
● Pin Arrangement Chart

1	84	83	82	81	80	79	78	77	76	75	74	73	72	71	70	69	68	67	66	65	64
2	85	160	159	158	157	156	155	154	153	152	151	150	149	148	147	146	145	144	143	142	63
3	86	161	228	227	226	225	224	223	222	221	220	219	218	217	216	215	214	213	212	141	62
4	87	162	229	288	287	286	285	284	283	282	281	280	279	278	277	276	275	274	211	140	61
5	88	163	230															273	210	139	60
6	89	164	231															272	209	138	59
7	90	165	232															271	208	137	58
8	91	166	233															270	207	136	57
9	92	167	234															269	206	135	56
10	93	168	235															268	205	134	55
11	94	169	236							TOP VEIW								267	204	133	54
12	95	170	237															266	203	132	53
13	96	171	238															265	202	131	52
14	97	172	239															264	201	130	51
15	98	173	240															263	200	129	50
16	99	174	241															262	199	128	49
17	100	175	242															261	198	127	48
18	101	176	243															260	197	126	47
19	102	177	244	245	246	247	248	249	250	251	252	253	254	255	256	257	258	259	196	125	46
20	103	178	179	180	181	182	183	184	185	186	187	188	189	190	191	192	193	194	195	124	45
21	104	105	106	107	108	109	110	111	112	113	114	115	116	117	118	119	120	121	122	123	44
22	23	24	25	26	27	28	29	30	31	32	33	34	35	36	37	38	39	40	41	42	43

VSS	PIO27	DSP_BCLKI	PIO25	PIO24	PIO22	OVDD3	DSP_BDI	DSP_BFSI	DSP_XHINT	DSP_HRDY	OVSS6	DSP_BFSO	DSP_BCLKO	XCS_SRAMH	OVDD2	DSP_XRS	DSP_ATTCNT	D31	CD_MCLK	ADC_GCNT2	VSS
PIO29	PIO28	PIO26	D4	D6	OVSS7	D10	XCS_DSP	D14	PIO23	D18	D20	DSP_BDO	D24	PIO_OUT	OVSS5	TEST1	CD_LRCLK	CD_BLK	ADC_GCNT0	ADC_GCNT1	ADC_DATA
USBXPWREN	XCS_FLASH	D2	D3	D5	D8	D9	D12	D13	D16	D17	D19	D22	D23	D26	D27	D29	D30	A2	A3	ADC_BCLK	ADC_LRCLK
USBXOVRCUR	D0	D1	VSS	VDD	D7	VDD	D11	VSS	D15	VDD	VDD	D21	VSS	D25	VDD	D28	VSS	VSS	A4	ADC_MCLK	TEST4
UVD1M	XMRD	XMWR	VSS															VDD	A5	A6	EXTAL1
UVD1P	USBPWREN	XLLBEN	XLUBEN															VPDP	A7	A8	OVSS4
UVD2M	XIOWR	XIORD	VDD															VDD	A9	A10	XTAL1
UVD2P	NC	NC	NC															A11	A12	TEST2	TEST3
USBOVRCUR	NC	NC	VSS															VSS	PC_READY	DAC_MCLK	DAC_LRCLK
USB_CLK	NC	NC	NC															PC_XVS2	PC_RESET	DAC_BCLK	DAC_DATA
XCS_SRAM	XREADY	XBCYST	VDD															VDD	PC_WXT	PC_XREG	PIO21
XWR_SRAM	SRAM_CSSEL	XCS2	VDD							TOP VEIW								VDD	PC_BVD2	PC_A0	OVSS3
PIO31	PIO30	XCS3	XCS5															PC_BVD1	PC_WP	PIO20	CD_DATA
IR_RX	XCS6	DREQ0	VSS															VSS	PC_XCD2	PIO19	PIO18
TEST0	XTST	DREQ1	DREQ2															PC_XCD1	PC_XCE1	PIO17	PIO16
XTAL0	SMCK	INT3	VDD															VDD	PC_XCE2	PIO15	PIO14
MST	XSM	INT2	INT1															PC_XOE	PC_XVS1	PIO13	PIO12
EXTAL0	GDC_WT	INT0	VDD															VSS	PC_XIORD	PIO11	PIO10
UART9_TXD	UART9_RXD	ATA_DA0	VSS	VSS	ATA_XDIOR	VDD	ATA_DD1	VSS	ATA_DD5	VDD	VDD	ATA_DD10	VSS	ATA_DD14	VDD	ATA_XCS0	VDD	VSS	PC_XIOWR	PIO9	PIO8
UART8_TXD	UART8_RXD	ATA_DA1	ATA_INT	ATA_XDMACK	ATA_IORDY	ATA_DMARQ	ATA_DD0	ATA_DD3	ATA_DD4	ATA_DD7	ATA_DD8	ATA_DD9	ATA_DD12	ATA_DD13	ATA_DA2	ATA_XCS1	PC_XPWR	PC_XUBUF	PC_XWE	PIO7	PIO6
UART7_TXD	UART7_RXD	UART6_RXD	OVSS0	UART4_RXD	XRESET	ATA_XDIOW	UART3_RXD	ATA_DD2	UART1_RXD	ATA_DD6	ATA_XRESET	UART_XDCD	ATA_DD11	UART_XRI	ATA_DD15	UART1_XDTR	ATA_DIR	PC_XLBUF	PIO2	PIO5	PIO4
VSS	UART6_TXD	UART5_RXD	UART5_TXD	UART4_TXD	UART3_TXD	OVDD0	UART2_TXD	UART2_RXD	UART1_TXD	A23	CPU_CLK	OVSS1	UART1_XCTS	UART_XDSR	OVDD1	UART1_XRTS	PIO0	PIO1	OVSS2	PIO3	VSS

● Block Diagram Chart

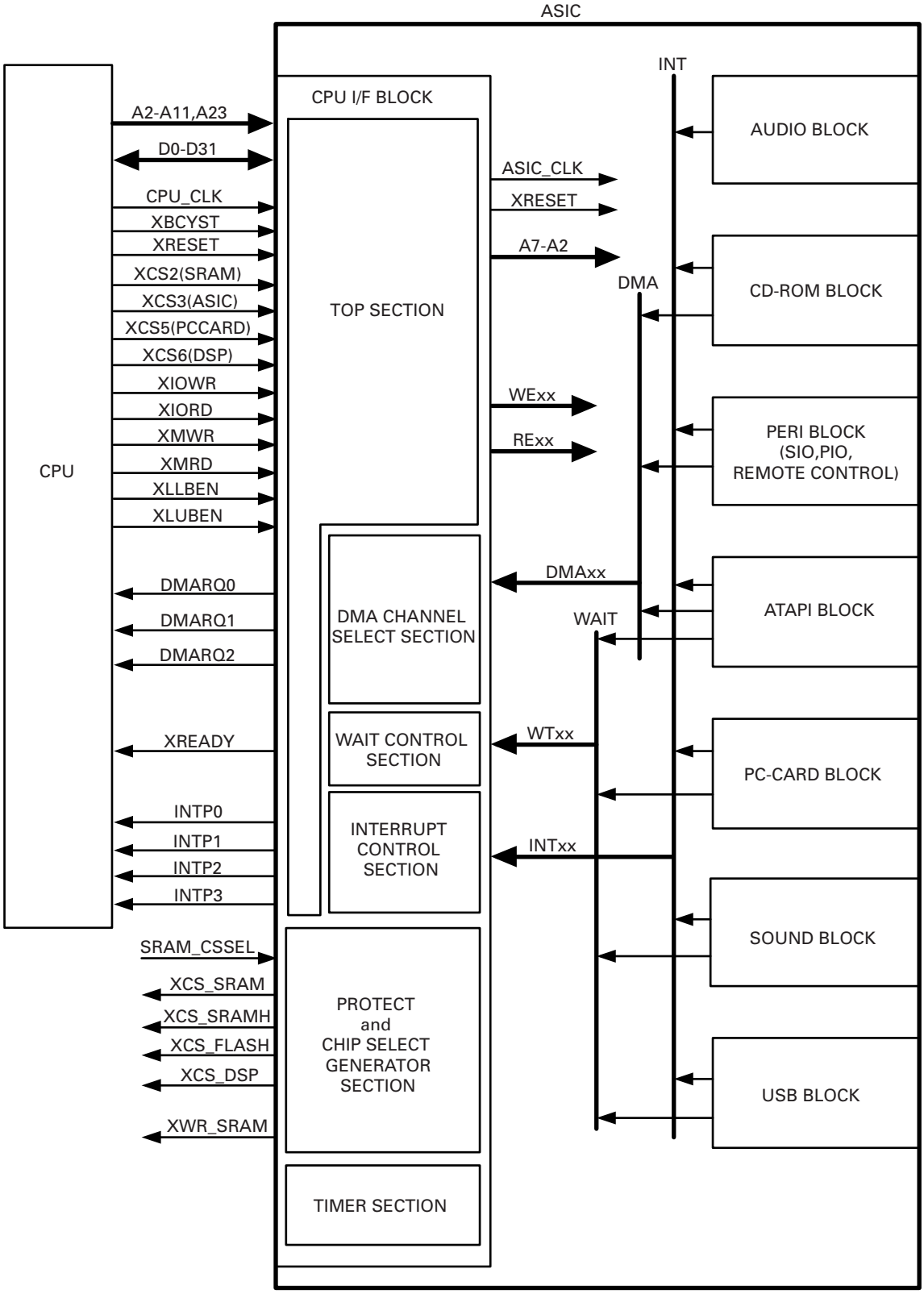

●Pin Functions(PD5937A)

Pin No.	Pin Name	I/O	Function and Operation
1	ARMSW	O	LED light output
2	NFANCNT	O	CC Unit Fan motor control output
3	AFANCNT	O	Power amplifier IC Fan motor control output
4	ILMPWR	O	Illumination ON output
5	REAON	O	Illumination color select output, when the rear monitor is ON (H : Green, L : Amber)
6	CNVSS	I	Connect to GND
7	DISC	I	Disc detect input
8	EJECT	I	Disc eject input
9	RESET	I	Reset input
10	XOUT	O	Crystal oscillator connection pin
11	GND		GND
12	XIN	I	Crystal oscillator connection pin
13	VDD		VDD
14	INT	I	Connect to VDD
15	$\overline{\text{BSENS}}$	I	Backup sense input
16	$\overline{\text{ASENS}}$	I	ACC sense input
17	$\overline{\text{FDSEN}}$	I	Grille detach sense input
18	RST3	O	Navigation control reset output
19	AUPW	O	Audio power supply control output
20	DRAMPW	O	Navigation control DRAMPW output
21	BEEP	O	BEEP output
22	RXN	I	Data input from Navigation (UART)
23	TXIN	O	Data output to Navigation (UART)
24	TSO	O	Data output to Hideaway Unit (UART)
25	TSI	I	Data input from Hideaway Unit (UART)
26	TSCK	I	Test program clock input
27	BUSY		Not used
28	CCON	O	Navigation control CCON output
29	XCCSTB	I	Stand-by OK of the CC Unit input
30	CPUWDT	I	Watch dog timer input
31	IRQPW	O	Navigation control IRQPW output
32	RSTOUT	O	Navigation control RSTOUT output
33	MUTEPE		Not used
34	MUTNS	O	Mute output at the time of MIX
35	SELL	O	Navigation voice Lch MIX control output
36	SELR	O	Navigation voice Rch MIX control output
37	VFSEL	O	Front monitor source select output (H : Hideaway Unit, L : MS3)
38	VRSEL	O	Rear monitor source select output (H : Hideaway Unit, L : MS3)
39	VSEL3		Not used
40	DATA		Not used
41	CLK		Not used
42	CS		Not used
43	AMPSTB	O	Amplifier stand-by output
44	ILMSEL	O	Illumination color select output (H : Amber, L : Green)
45	ILMDIM	O	Sub display DIM power supply control output
46	DSENS	I	Detach sense input
47	$\overline{\text{ILMSENS}}$	I	Illumination sense input
48	PBSENS	I	Parking brake sense input
49	TELIN	I	TEL mute input
50	ASENBO	O	ASENS output
51	MUTESO	O	Mute output
52	LIFTPUL	I	Lift pulse input
53	MTRS	O	Flap motor speed control output
54	MTRPW	O	Flap motor control power supply output
55	MTR1	O	Flap angle motor control signal output
56	MTR1	O	Flap position motor control signal output
57	MTRSEL	O	Flap motor control output
58	ANGLE0SW	I	Flap angle 0 sense input
59	LIFTSW	I	Lift sense input
60	SENSE5	O	Pulse power supply control output
61	ANTPW	O	Auto antenna power output
62	WCONT	I	Wired remote control SEL input
63	TESTIN	I	Test mode input
64	TIMEOUT	I	Timeout input
65-67	SIMUKE0-2	I	Model select input0-2
68	51MUTE	O	5.1 ch mute output

Pin No.	Pin Name	I/O	Function and Operation
69	NC		Not used
70	WREMIN	I	Wired remote control AD input
71	ATEMPI		Not used
72	ANGLE	I	Flap angle sense input
73	NTEMPI	I	CC Unit temperature input
74	NC		Not used
75	AVSS		A/D GND
76	NC		Not used
77	AVREF		A/D converter reference voltage
78	AVCC		A/D power supply
79	NC		Not used
80	MUTEGU	O	TELIN/GUIDE interrupt notice output

* PD5937A

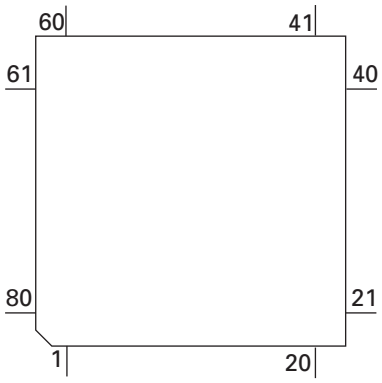

●Pin Functions(PD3390A)

Pin No.	Pin Name	I/O	Format	Function and Operation
1	VCC0			Power supply (3.3V)
2	VSS0			GND
3	TXD2	I/O		SIO2 Transmission data input / output
4	RXD2	I/O		SIO2 Reception data input / output
5	TXD1	O	C	SIO1 Transmission data output
6	RXD1	I		SIO1 Reception data input
7	TXD0	O	C	SIO0 Transmission data output
8	RXD0	I		SIO0 Reception data input
9	SPEED	I		SP I/F input
10	ADCSB	O	C	AD I/F output
11	ADSCK	O	C	AD I/F output
12	ADTXD	O	C	AD I/F output
13	ADRXD	I		AD I/F input
14	ADSRX	I		AD I/F input
15	ADIO0	I/O		AD I/F input / output
16	ADIO1	I/O		AD I/F input / output
17	ADIO2	I/O		AD I/F input / output
18	VCC1			Power supply (3.3V)
19	VSS1			GND
20	PWM	O		PWM signal output
21	PLINT	I		PLL I/F input
22	PLCE	O	C	PLL I/F output
23	PLSCK	O	C	PLL I/F output
24	PLTX	O	C	PLL I/F output
25	PLRX	I		PLL I/F input
26	PLIO0	I/O		PLL I/F input / output
27	PLIO1	I/O		PLL I/F input / output
28	PLIO2	I/O		PLL I/F input / output
29	DDINT	I		Darc I/F input
30	DDCE	O	C	Darc I/F output
31	DDSCK	O	C	Darc I/F output
32	DDTX	O	C	Darc I/F output
33	DDRX	I		Darc I/F input
34	DDIO0	I/O		Darc I/F input / output
35	DDIO1	I/O		Darc I/F input / output
36	DDIO2	I/O		Darc I/F input / output
37	TIOA0	I/O		Parallel input / output
38	TIOA1	I/O		Parallel input / output
39	TIOB0	I/O		Parallel input / output
40	TIOB1	I/O		Parallel input / output
41	VCC2			Power supply (3.3V)
42	VSS2			GND
43-53	A19-9	I/O		Address bus input / output
54	VCC3			Power supply (3.3V)
55	VSS3			GND
56-64	A8-0	I/O		Address bus input / output
65	VCC4			Power supply (3.3V)
66	VSS4			GND
67-82	D0-15	I/O		Address bus input / output
83	VCC5			Power supply (3.3V)
84	VSS5			GND
85	WRHB	I/O		Upper data write strobe input / output
86	WRLB	I/O		Lower data write strobe input / output
87	RDB	I/O		Read data strobe input / output
88	CS2B	I/O		Chip select aria 1 for external storage input / output
89	CS0B	I/O		Chip select aria 0 for ROM input / output
90	VCC6			Power supply (3.3V)

Pin No.	Pin Name	I/O	Format	Function and Operation
91	VSS6			GND
92	TEST2			Test mode
93	CKOEB	I		CK output enable input
94	CK	O	C	CPU clock output
95	CS5B	O	C	DRAM low address strobe output
96	CS3B	O	C	DRAM column address strobe output
97	CS1B	O	C	DRAM column address upper byte strobe output
98	RTCVSS1			Power supply (3.3V)
99	SRAMB	I		Backup memory select input
100	STANBYB	I		Stand by signal input
101	RTCVSS0			GND
102	XRTCIN	I		Sub crystal oscillator input (RTC)
103	XRTCOUT	O	C	Sub crystal oscillator output (RTC)
104	RTCVCC			Power supply (3.3V)
105	PCKSEL0	I		Processor clock select input
106	PCKSEL1	I		Processor clock select input
107	CCKSEL	I		CRCK signal select input
108	CCKDIR	I/O		Carrier clock direct input / inverter amp output
109	CCKVCC			Power supply (3.3V)
110	CRCK	I		Carrier clock input
111	CCKGND			GND
112-118	PC0-6	I/O		Parallel input / output
119	NMI			Connect to VCC
120	RESETB	I		System reset input
121	MSTRSTB	I		Test reset input
122	TEST0	I		Test mode input
123	TEST1	I		Test mode input
124	REFSEL	I		GPS reference clock select input
125	REFCK	I		Reference clock input
126	VCC7			Power supply (3.3V)
127	VSS7			GND
128	XAUXIN	I		Sub crystal oscillator output input (AUX)
129	XAUXOUT	O	C	Sub crystal oscillator output (AUX)
130-133	PIN0-3	I		Parallel input
134-137	PIO4-7	I/O		Parallel input / output
138	TXD3	I/O		SIO3 Transmission data input / output
139	RXD3	I/O		SIO3 Reception data input / output
140	BOWWOWB	O	C	Watch dog timer output
141	IFDIR	I/O		IF direct input / IF inverter amp output
142	IFVCC			Power supply (3.3V)
143	IF	I		IF input
144	IFGND	I		IF amp GND input

* PD3390A

Format	Meaning
C	C MOS

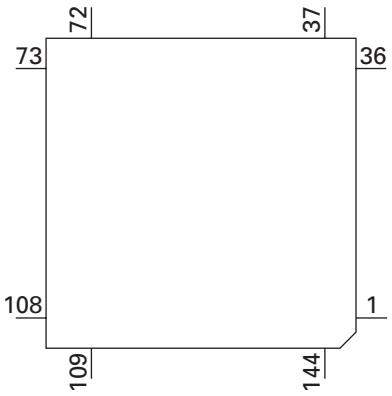

●Pin Functions(LC72720YVS : EW model)

Pin No.	Pin Name	I/O	Function and Operation
1	VREF	O	Reference voltage output
2	MPXIN	I	Base band (multiplexed) signal input
3	Vdda		Analog system power supply (+5V)
4	NC		Not used
5	Vssa		Analog system GND
6	FLOUT	O	Sub carrier output (filter output)
7	CIN	I	Sub carrier input (comparator input)
8	NC		Not used
9	T1	I	Test input (connect to GND)
10	T2	I	Test input (stand-by control)
11	T3	O	RDS clock output
12	NC		Not used
13	T4	O	RDS data output
14	T5	O	Soft-decision control data output
15	XOUT	O	Crystal oscillator output
16	XIN	I	Crystal oscillator input
17	Vddd		Digital system power supply (+5V)
18	Vssd		Digital system GND
19	NC		Not used
20	T6	O	Error status,regenerated carrier and error block count outputs
21	T7	O	Error correction status, SK detection and error block count outputs
22	SYNC	O	Block synchronization detection output
23	NC		Not used
24	RDS-ID	O	RDS detection output
25	DO	O	Data output
26	CL	I	Clock input
27	NC		Not used
28	DI	I	Data input
29	CE	I	Chip enable input
30	SYR	I	Synchronization and RAM address reset input

* LC72720YVS(EW model)

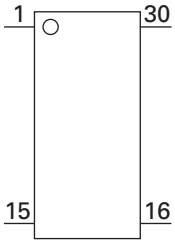

SBX3050-01

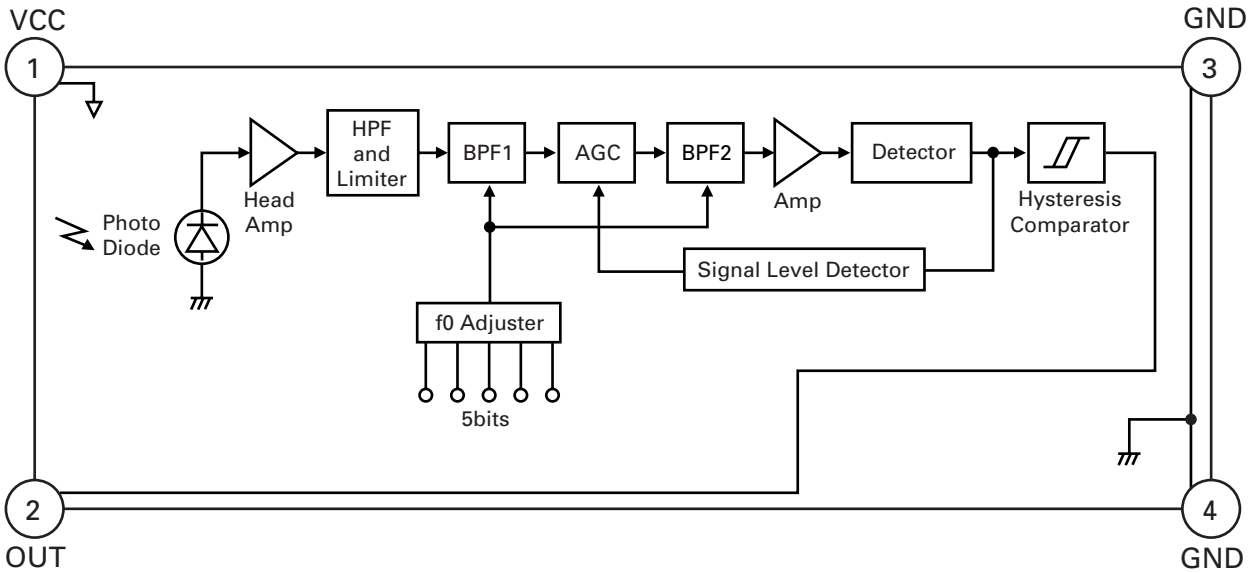

* PD6473A(UC model)
* PD6472A(EW model)

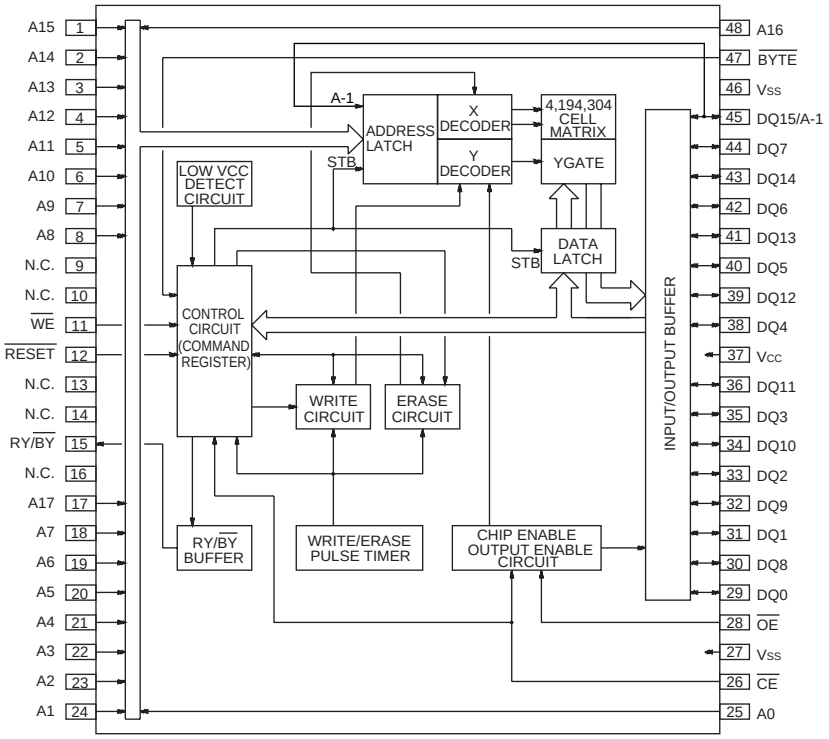

● Pin Functions (PD6340A)

Pin No.	Pin Name	I/O	Function and Operation
1-5	SEG4-0	O	LCD segment output
6-9	COM3-0	O	LCD common output
10	VLCD		LCD drive power supply
11-14	KST3-0	O	Key strobe output
15,16	KDT0,1	I	Key data input (analogue input)
17	REM	I	Remote control reception input
18	DPDT	I	Display data input
19	NC		Not used
20	KYDT	O	Key data output
21	MODA		GND
22	XO		Crystal oscillator connection pin
23	XI		Crystal oscillator connection pin
24	VSS		GND
25,26	KDT2,3	I	Key data input
27,28	KST5,4	O	Key strobe output
29-55	SEG39-13	O	LCD segment output
56	VDD		Power supply
57-64	SEG12-5	O	LCD segment output

* PD6340A

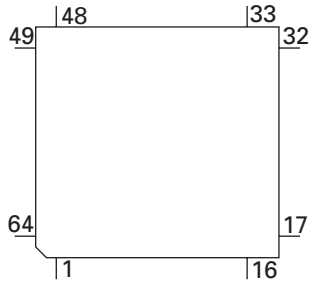

●Pin Functions(PE5413A)

Pin No.	Pin Name	I/O	Function and Operation
1	PNLADX	I	X directions analog input
2	LSEN	I	Lens sense input
3	PNLADY	I	Y directions analog input
4	AVSS		A/D converter GND
5	DIMMER	O	Dimmer anarog output
6	INVBST_DA	O	Back light boost signal output (low temperature)
7	AVREF1		D/A converter reference voltage
8	RXD	I	Data input from system microcomputer (UART)
9	TXD	O	Data output to system microcomputer (UART)
10	MFLPW	O	Back light control output
11	LKYDT	I	Data input from LCD micro computer (UART)
12	LDPDT	O	Data output to LCD micro computer (UART)
13	MVIPW	O	Picture power supply control output
14	OSDCS	O	OSD chip select output
15	NC		Not used
16	TSI	I	Test program data input
17	TSO	O	Test program data output
18	TSCK	I	Test program clock input
19	OVICHK	I	Back light power supply overcurrent detect input
20	EPRRST	I	EEPROM reset input
21	EPRTEST	I	EEPROM data setup mode input
22	STEST	I	Monitor operation mode input
23	STEST2	I	Touch panel test mode input
24	PNLXV	O	Hi output is carried out when X directions is detected
25	PNLYV	O	Hi output is carried out when Y directions is detected
26	NC		Not used
27	SDA	I/O	IC data input / output
28	SCL	O	IC clock output
29	PIPRES	O	IC reset output
30	LSWVDD	O	LCD micro computer power supply control output
31,32	NC		Not used
33	VSS1		GND
34-37	NC		Not used
38	ROMDATA		Not used
39	ROMCLK		Not used
40	POMCS		Not used
41,42	NC		Not used
43	INVBST		Not used
44	INVPUL	O	Inverter pulse output
45	BEEP		Not used
46	EPRCS	O	EEPROM chip select output
47	EPRSK	O	EEPROM serial clock output
48	EPRDO	O	EEPROM serial data output
49	EPRDI	I	EEPROM serial data input
50	EPRPROT	O	EEPROM memory protect output
51	TESTIN	I	Chip test input
52	NC		Not used
53	LDIMMER		Not used
54	LBKL	O	LCD micro computer back light power supply control output
55,56	NC		Not used
57	LCDTYPE1	I	LCD panel type detect input1
58	NC		Not used
59	LCDTYPE2	I	LCD panel type detect input2
60	RESET	I	Reset input
61	REMIN	I	Remote control data input
62	VDDSENS	I	Power supply sense input
63	ROT0	I	Rotary encoder input0
64	ROT1	I	Rotary encoder input1
65	LCDLR		Not used
66	TVIND		Not used
67	VSS0		GND
68	VDD1		Power supply
69	X2		Crystal oscillator connection pin
70	X1		Crystal oscillator connection pin
71	VPP		Not used
72	XT2		Not used

Pin No.	Pin Name	I/O	Function and Operation
73	XT2		GND
74	VDD0		Power supply
75	AVDD		A/D converter power supply
76	KEY0	I	Analog key data input 0
77	KEY1	I	Analog key data input 1
78	KEY2	I	Analog key data input 2
79	NC		Not used
80	TEMPSEN	I	Temperature sense input (back light boost)

* PE5413A

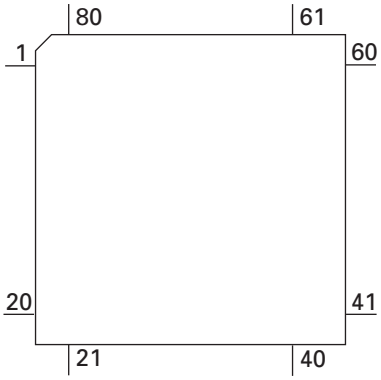

* S-80835CNNB-B8U

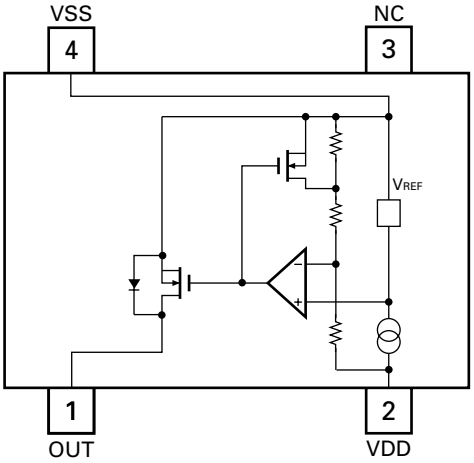

SI6544DQ

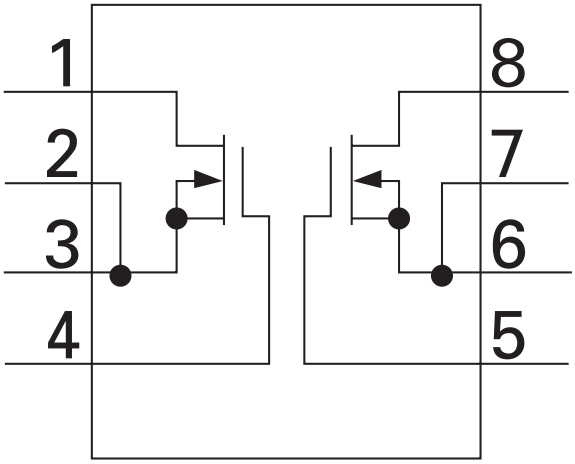

TK15404AMI

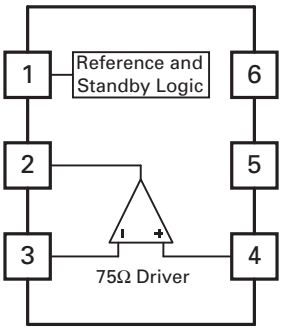

S-93C46BR0I-J8T1

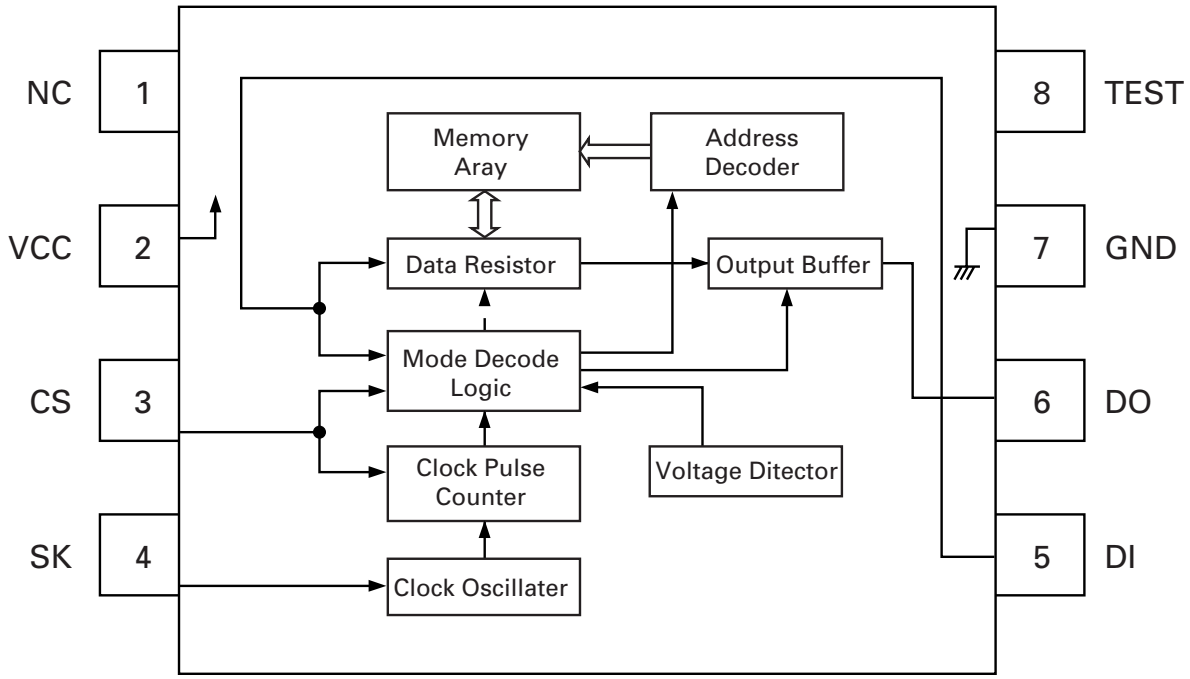

* R1224N102H

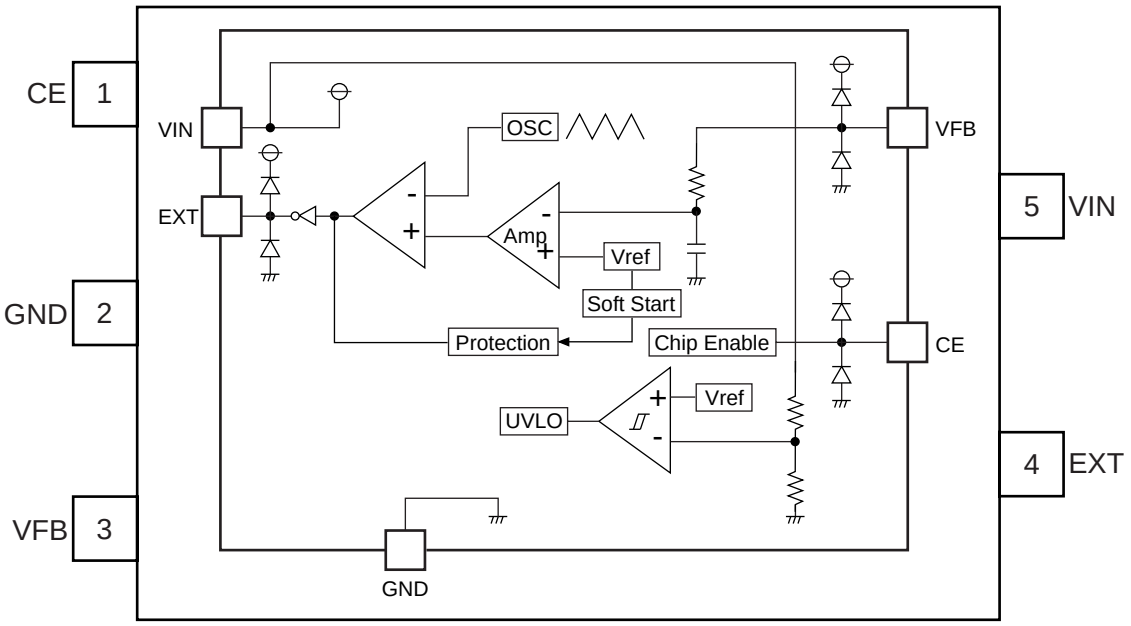

HA12240FP

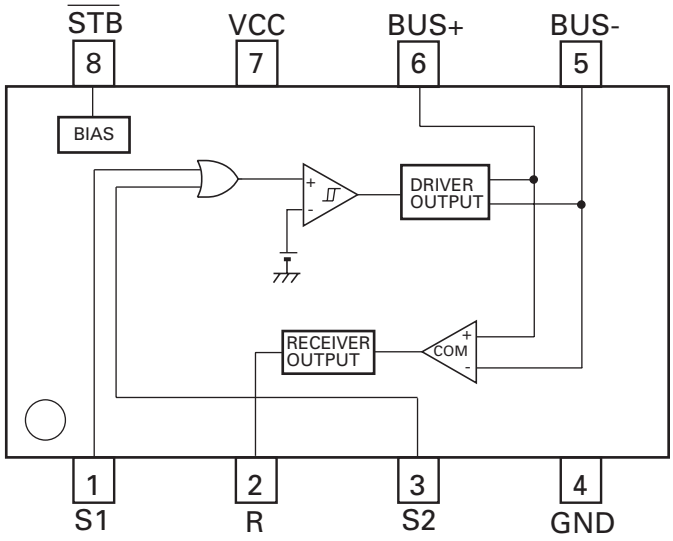

* S-L2980A50MC-C7J

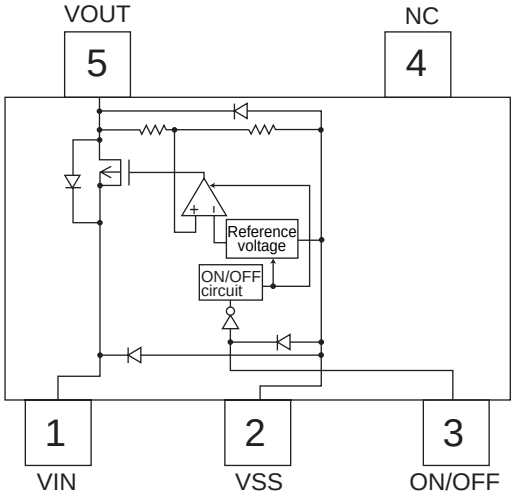

* S-812C33AMC-C2N

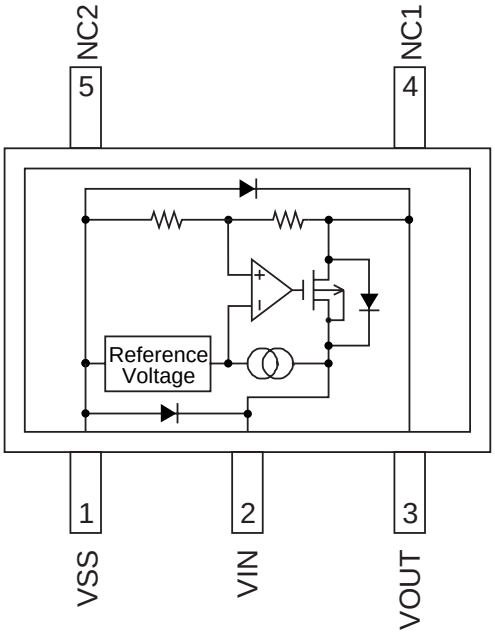

●Pin Functions(PE5412A : UC model)(PE5411A : EW model)

Pin No.	Pin Name	I/O	Function and Operation
1	HTOP	O	UART output to power supply microcomputer
2	HFANCONT		Not used
3-5	NC		Not used
6	MTOH	I	UART input from monitor microcomputer
7	HTOM	O	UART output to monitor microcomputer
8	TSCK		Not used
9	EVDD		Power supply
10	EVSS		GND
11	MUTEAMP	O	Mute output (AMP)
12	ACCPW		Not used
13	SWACPW	O	Monitor microcomputer power supply output
14	HACCPW	O	Hide away power supply ON/OFF output
15-17	NC		Not used
18	SWBUPSW		Not used
19	SWVDDSW		Not used
20	HFANON		Not used
21	VPP		VSS
22	VCK	O	E-VOL : Clock output
23	VDT	O	E-VOL : Data output
24	VST	O	E-VOL : Strobe pulse output
25	MUTEVOL	O	E-VOL : Mute output
26	RX	I	IP-BUS : Data input
27	TX	O	IP-BUS : Data output
28	IPPW	O	IP-BUS : Driver power supply control output
29	ASENBO	O	IP-BUS : Slave ACC sense output
30	NC		Not used
31	ROMDATA		Not used
32	ROMCLK		Not used
33	ROMCS		Not used
34	RESET	I	Reset input
35	XT2		Open
36	XT1		Pull up
37	REGC		Memory connection for the regulator stabilization
38	X2		Crystal oscillator connection pin
39	X1		Crystal oscillator connection pin
40	VSS		GND
41	VDD		Power supply
42	PCL		Clock output
43	NC		Not used
44	REVSENS	I	Reverse signal sense input
45,46	STEST1,2	I	Single operation mode input1,2
47,48	SIMUKE1,2		Not used
49	TESTIN	I	Test mode input
50	NC		Not used
51,52	VSELIN1,2	I	VSEL input1,2
53	AVONIN	I	AV-BUS : AV ON input
54-57	NC		Not used
58	BVDD		Power supply
59	BVSS		GND
60	RECIVE		Not used
61	RDSHSLK	I	RDS : High speed signal input (EW model)
62	RDSLK	I	RDS : Signal input (EW model)
63	RDT	I	RDS : Data input (EW model)
64	NC		Not used
65,66	TUNCE1,2	O	PLL chip enable output1,2
67	NC		Not used
68	HMUTEA	O	Rear voice mute output
69	HMUTEV	O	Rear picture driver stand-by output
70	NC		Not used
71	SCL	I/O	IIC-BUS : Clock input/output
72	SDA	I/O	IIC-BUS : Data input/output
73	AVSELMUTE		Not used
74	AVDD		VDD
75	AVSS		VSS
76	AVREF		Not used
77	TUNSL	I	FM/AM tuner : Signal level analog input

Pin No.	Pin Name	I/O	Function and Operation
78	TEMP		Not used
79-89	NC		Not used
90	BSENS	I	Backup sense input
91	ASENS	I	ACC sense input
92	TUNLDET	I	Tuner : PLL lock detect input (EW model)
93	RDSCK	I	RDS : Data clock input (EW model)
94-96	NC		Not used
97	TUNPDI	I	FM/AM tuner : PLL data input
98	TUNPDO	O	FM/AM tuner : PLL data output
99	TUNCK	O	PLL clock output
100	PTOH	I	UART input from power supply microcomputer

* PE5412A(UC model)
* PE5411A(EW model)

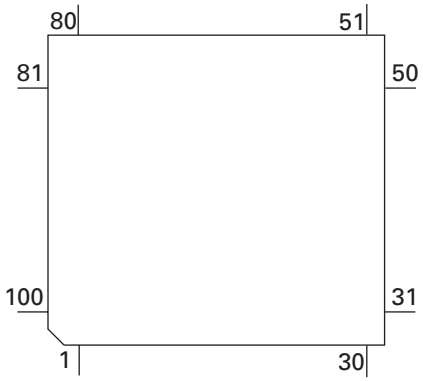

● FM/AM Tuner Unit (AVIC-N1/UC)

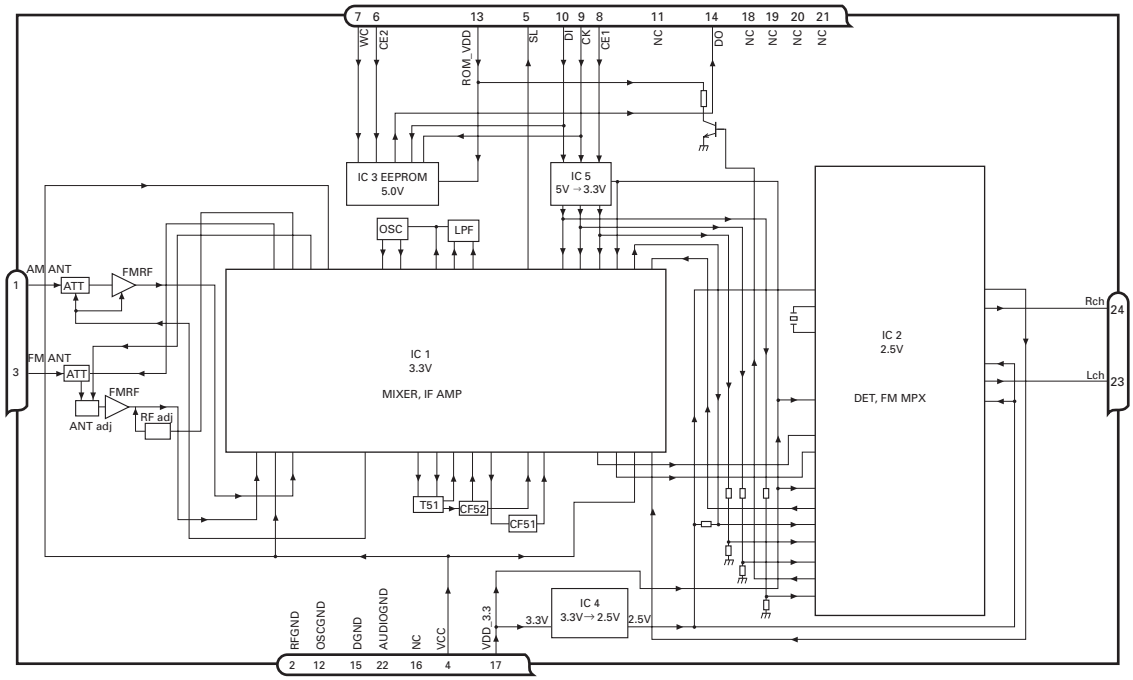

No.	Symbol	I/O	Explain	
1	AMANT	I	AM antenna input	AM antenna input high impedance AMANT pin is connected with an all antenna by way of 4.7μH. (LAU type inductor) A series circuit including an inductor and a resistor is connected with RF ground for the countermeasure against the hum of power transmission line.
2	RFGND		RF ground	Ground of antenna block
3	FMANT	I	FM antenna input	Input of FM antenna 75Ω Surge absorber(DSP-201M-S00B) is necessary.
4	VCC		power supply	The power supply for analog block. D.C 8.4V ± 0.3V
5	SL	O	signal level	Output of FM/AM signals level
6	CE2	I	chip enable-2	Chip enable for EEPROM "Low" active
7	WC	I	write control	You can write EEPROM, when EEPROM write control is "Low". Ordinary non connection
8	CE1	I	chip enable-1	Chip enable for AF•RF "High" active
9	CK	I	clock	Clock
10	DI	I	data in	Data input
11	NC		non connection	Not used
12	OSCGND		osc ground	Ground of oscillator block
13	ROM_VDD		power supply	Power supply for EEPROM pin 13 is connected with a power supply of micro computer.
14	DO	O	data out	Data output
15	DGND		digital ground	Ground of digital block
16	NC		non connection	Not used
17	VDD_3.3		power supply	The power supply for digital block. 3.3V ± 0.2V
18	NC		non connection	Not used
19	NC		non connection	Not used
20	NC		non connection	Not used
21	NC		non connection	Not used
22	AUDIOGND		audio ground	Ground of audio block
23	L ch	O	L channel output	FM stereo "L-ch" signal output or AM audio output
24	R ch	O	R channel output	FM stereo "R-ch" signal output or AM audio output

● FM/AM Tuner Unit (AVIC-X1/EW)

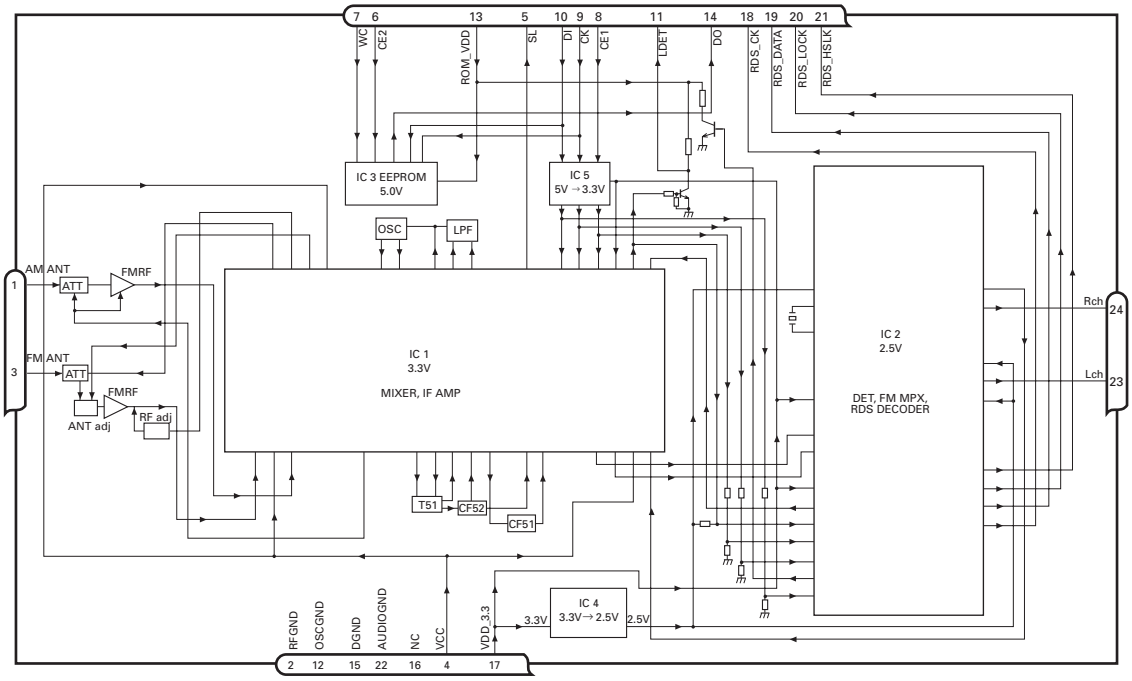

No.	Symbol	I/O	Explain	
1	AMANT	I	AM antenna input	AM antenna input high impedance AMANT pin is connected with an all antenna by way of 4.7μH. (LAU type inductor) A series circuit including an inductor and a resistor is connected with RF ground for the countermeasure against the hum of power transmission line.
2	RFGND		RF ground	Ground of antenna block
3	FMANT	I	FM antenna input	Input of FM antenna 75Ω Surge absorber(DSP-201M-S00B) is necessary.
4	VCC		power supply	The power supply for analog block. D.C 8.4V ± 0.3V
5	SL	O	signal level	Output of FM/AM signals level
6	CE2	I	chip enable-2	Chip enable for EEPROM "Low" active
7	WC	I	write control	You can write EEPROM, when EEPROM write control is "Low". Ordinary non connection
8	CE1	I	chip enable-1	Chip enable for AF•RF "High" active
9	CK	I	clock	Clock
10	DI	I	data in	Data input
11	LDET	O	lock detector	"Low" active
12	OSCGND		osc ground	Ground of oscillator block
13	ROM_VDD		power supply	Power supply for EEPROM pin 13 is connected with a power supply of micro computer.
14	DO	O	data out	Data output
15	DGND		digital ground	Ground of digital block
16	NC		non connection	Not used
17	VDD_3.3		power supply	The power supply for digital block. 3.3V ± 0.2V
18	RDS_CK	O	RDS clock	Output of RDS clock(2.5V)
19	RDS_DATA	O	RDS data	Output of RDS data(2.5V)
20	RDS_LOCK	O	RDS lock	Output unit "High" active(2.5V) (RDS_LOCK turns over by the external transistor. "Low" active)
21	RDS_HSLK	O	RDS high speed lock	Output unit "High" active(2.5V)(RDS_HSLK turns over by the external transistor. "Low" active)
22	AUDIOGND		audio ground	Ground of audio block
23	L ch	O	L channel output	FM stereo "L-ch" signal output or AM audio output
24	R ch	O	R channel output	FM stereo "R-ch" signal output or AM audio output

7.2.2 DISPLAY

● **LCD(CAW1828)**

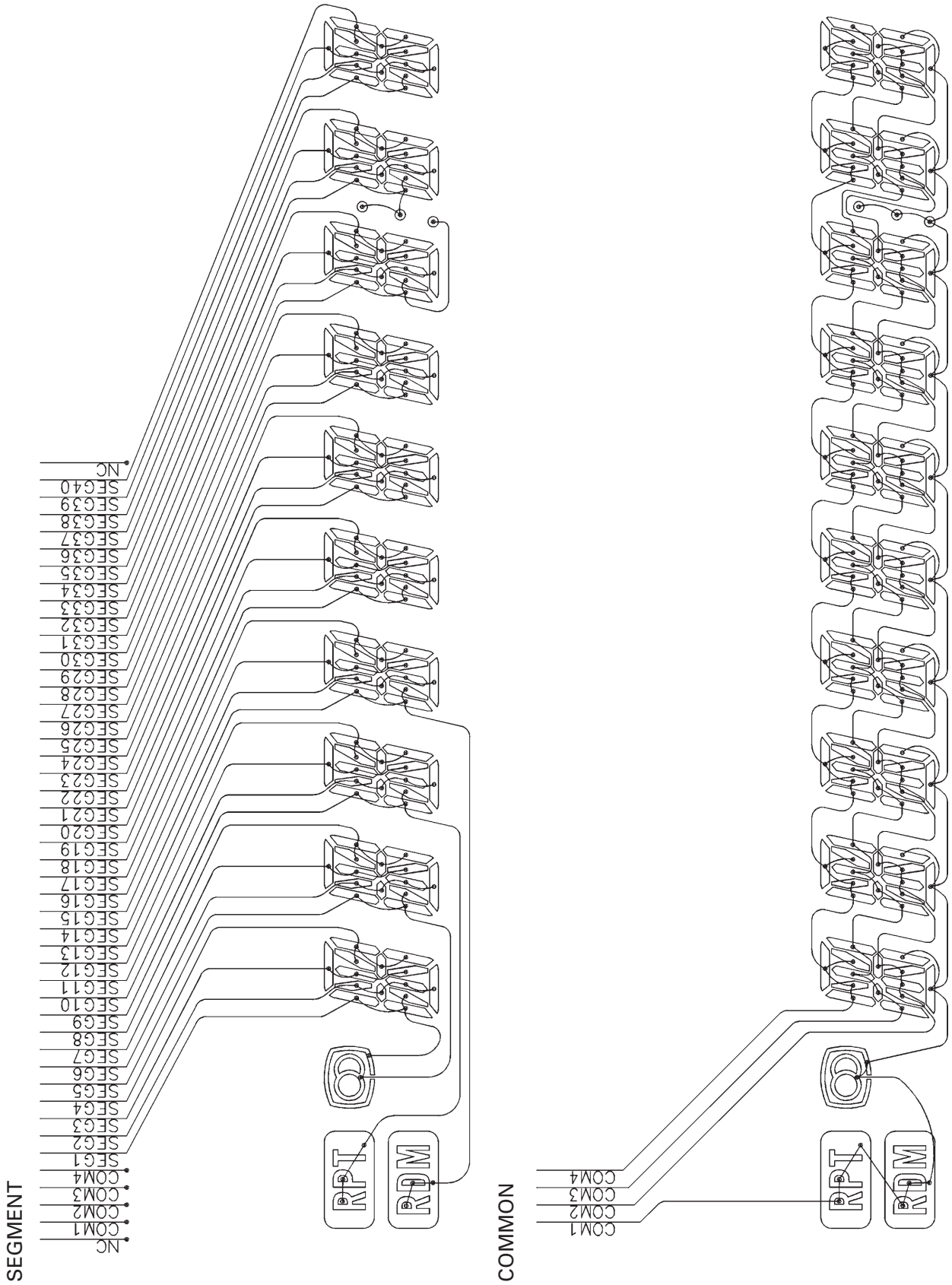

7.3 EXPLANATION

7.3.1 MECHANISM DESCRIPTIONS

● Outline of the FLAP motion

1. The motion is actuated made by two motors, the forward/backward driving motor (CXB9515) and the angle driving motor (CXB9516).
2. Analog electric potential generated by the angle encoder is detected to detect angle motion status and motion position.
3. Memory function for the angle last position is accomplished by the micro processor using the 256 resolution steps of the VDD.
4. A pulse is detected by the photo interrupter to detect the horizontal motion status.
5. In the case of reset start, the monitor will be in a stored position first, and ejection motion will take place, which puts the system in the booted up state.
6. Angle adjustment is made by the angle key (+/-).
7. OPEN/CLOSE key makes the monitor stored or ejected, and temporary folding key folds the monitor temporarily.
8. Setting of the monitor auto storage/ejection ON/OFF and set back ON/OFF at the time of ACC ON/OFF is made on the navigation menu screen.
9. A backlight is switched-off during forward/backward and storage.

● Explanation on the FLAP ejection motion

1. When the OPEN key is pressed or ACC is set to ON while the auto OPEN/CLOSE is being set to ON, angle driving motor rotates in the 0° direction for 500ms. (Pressed down.)

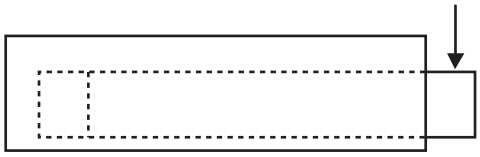

2. After 500ms, the angle driving motor is stopped, and the forward/backward driving motor rotates in the ejection direction.

3. For a period of 600ms from the time when LIFTSW is switched from H to L, the forward/backward driving motor keeps rotating in the ejection direction.

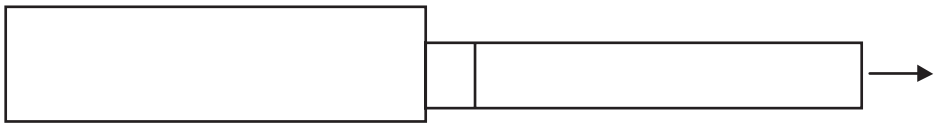

4. After 600ms, the forward/backward driving motor is stopped, and the angle driving motor rotates in the UP direction.

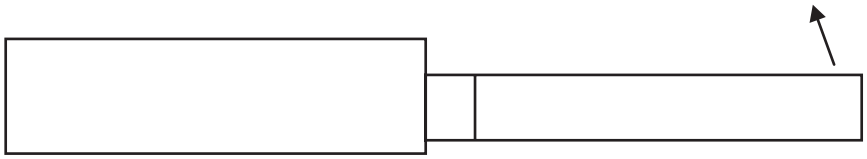

5. When the angle voltage reaches the voltage for 110°, brake is applied to the angle driving motor, and the ejection is completed. (In case the previous angle is stored in the memory, the motion continues to that angle.)

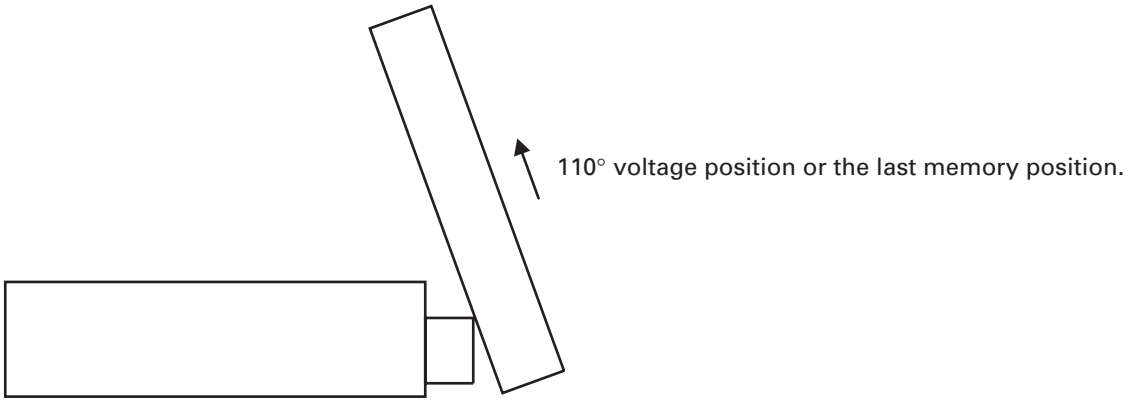

6. When the setback is set to ON, after the monitor angle voltage has reached the previously memorized voltage, brake is applied to the angle driving motor, then the forward/backward driving motor is rotated in slow speed in the storage direction. After that, when LIFTSW has switched from L to H, the forward/backward driving motor is stopped.

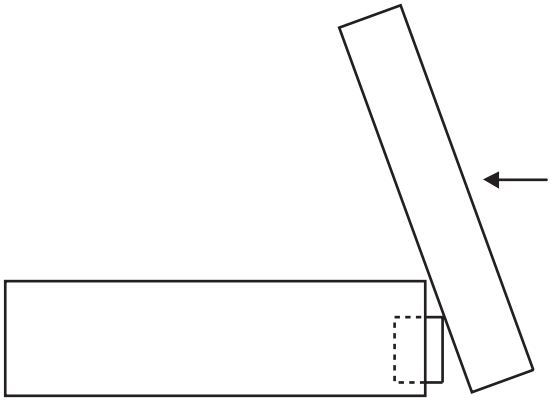

● Explanation of the FLAP storage motion

1. When CLOSE key is pressed, or after 6 seconds from ACC OFF when auto OPEN/CLOSE is being set to ON, the angle driving motor is rotated in the 0° direction. In case the setback setting is ON, the forward/backward driving motor is rotated in high speed in the ejection direction and the motor continues to rotate for 600ms from the time when LIFTSW is switched from H to L, then the angle driving motor is rotated in the 0° direction.

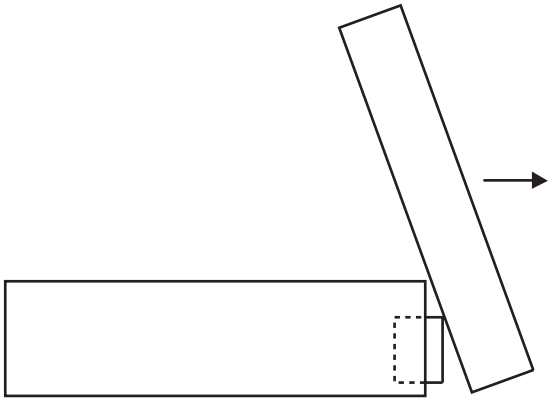

2. For a period of 500ms from the time when DIGOSW is switched from H to L, the angle driving motor is rotated in the 0° direction for the "pressed down" motion.

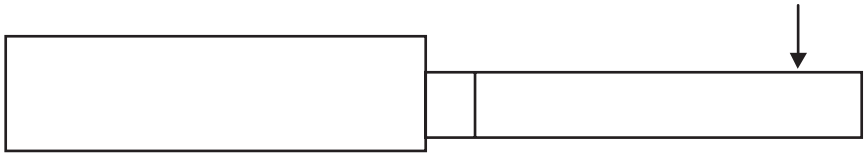

3. After 500ms, brake is applied to the angle driving motor, and then the forward/backward driving motor is rotated in the storage direction.

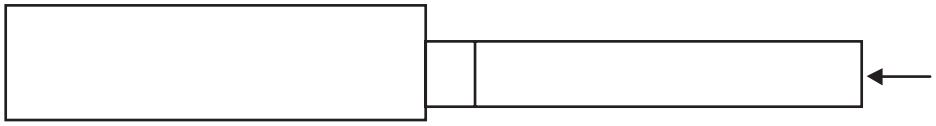

4. When the horizontal motion detection pulse is no longer detected for 200ms, brake is applied and the monitor storage motion is completed.

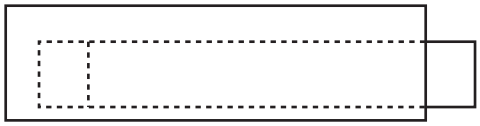

● Explanation on the FLAP angle adjustment

1. The angle driving motor is rotated in UP direction by the "+" key and in DOWN direction by the "–" key from the monitor stop position. If the key is kept pressed, the monitor will keep changing the angle without steps within the range of 50 to 110 degrees. When the setback is being set to ON, the forward/backward driving motor is rotated in the horizontal ejection direction while the key is being pressed, and angle adjustment is made by changing the angle voltage to the extent the angle adjustment key is effective after 600ms has elapsed from the time when LIFTSW has switched from H to L. When 3 seconds have elapsed from the time of angle adjustment completion, the forward/backward driving motor is rotated in slow speed in the horizontal storage direction, and brake is applied when LIFTSW has switched from L to H.

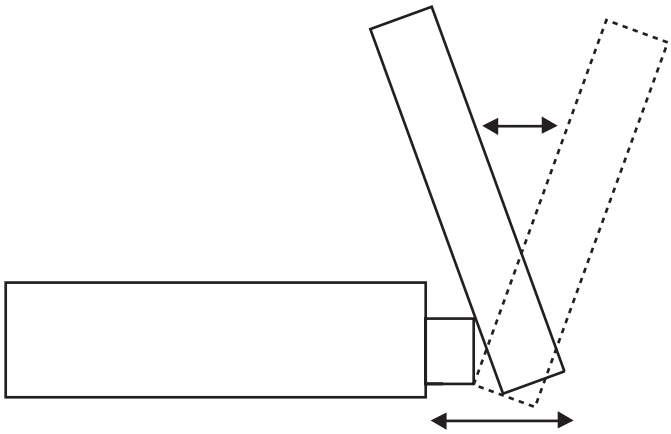

● Explanation on the FLAP temporary folding operation

1. By pressing the temporary folding key, the angle driving motor is rotated from the monitor stop position toward 0° direction. When the setback is being set to ON, the forward/backward driving motor is rotated when the key is pressed, brake is applied after 600ms has elapsed from the time when LIFTSW has switched from H to L, and the angle driving motor is rotated in 0° direction.

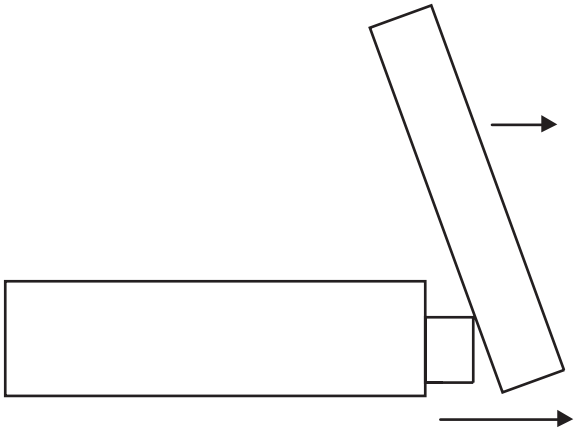

2. For a period of 500ms after DEGOSW has switched from H to L, the angle driving motor is rotated, and the monitor stops at its horizontal position by the brake. After 7 seconds, navigator operation sound is heard three times in 1 second interval. After 10 seconds, the angle driving motor is rotated in UP direction, and then the brake is applied to stop the motor at the last memory position. When the setback is being set to ON, after the angle driving motor stops at the last memory position, the forward/backward driving motor is rotated in slow speed in the horizontal storage direction, and the motor stops after LIFTSW has switched from L to H.

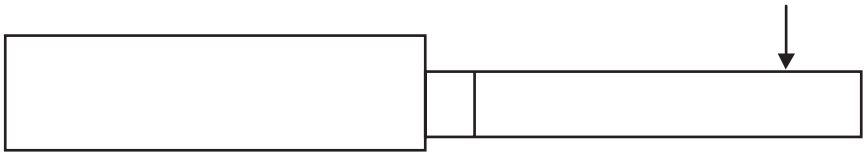

● Notes related to the FLAP motion

1. Regarding the angle position, angle voltage is always checked, and the last memory is stored by addition or subtraction of the voltage. It should be noted, however, that the last memory will not be stored when the monitor is manually moved by force.
2. If the expected pulse is not detected during horizontal motion, the monitor will stop at that position.

● Table of driving unit operations by different preset modes

		OPEN state	In OPEN motion	In CLOSE motion	CLOSE state
Auto OPEN/CLOSE setting ON	Bup ON (Reset start)	CLOSE state ↓ CLOSE ↓ OPEN state ↓ Last angle	——	——	Continue OPEN motion ↓ Last angle
	Bup OFF	To stand-by	To stand-by	To stand-by	To stand-by
	Bup OFF→ON	No state change	Continue OPEN motion ↓ Last angle ↓ Return	Continue CLOSE motion ↓ CLOSE	No state change
	ACC ON	No state change	——	——	OPEN motion ↓ Last angle ↓ Return
	ACC OFF→ON	No state change	Continue OPEN motion ↓ Last angle ↓ Return	Continue CLOSE motion ↓ CLOSE	No state change
	ACC OFF	6 sec from ACC OFF ↓ Advance ↓ CLOSE motion ↓ CLOSE	Continue OPEN motion ↓ Last angle ↓ Return ↓ 6 sec from ACC OFF ↓ Advance ↓ CLOSE motion ↓ CLOSE	Continue CLOSE motion ↓ CLOSE	No state change
	Last memory	OPEN	OPEN	CLOSE	CLOSE
Auto OPEN/CLOSE setting OFF	Bup ON (Reset start)	——	——	——	——
	Bup OFF	To stand-by	To stand-by	To stand-by	To stand-by
	Bup OFF→ON	No state change	Continue OPEN motion ↓ Last angle ↓ Return	Continue CLOSE motion ↓ CLOSE	No state change
	ACC ON	No state change	——	——	No state change
	ACC OFF→ON	No state change	Continue OPEN motion ↓ Last angle ↓ Return	Continue CLOSE motion ↓ CLOSE	No state change
	ACC OFF	No state change	Continue OPEN motion ↓ Last angle ↓ Return	Continue CLOSE motion ↓ CLOSE	No state change
	Last memory	OPEN	OPEN	CLOSE	CLOSE

* When the setback is being set to OFF, there will be no advance/return motion.
After ACC OFF, if ACC is switched ON again during the 6 seconds counting, standby will be passed and the FLAP status will not change.

● Table of temporary folding control

		Temporary folding state (horizontal position)	Temporary folding reset (horizontal position→last angle)	Temporary folding in motion (last angle→horizontal position)
Auto OPEN/CLOSE setting ON	Bup ON	———	———	———
	Bup OFF	To stand-by	To stand-by	To stand-by
	Bup OFF→ ON	Continue temporary folding motion	Continue OPEN motion ↓ Last angle ↓ Return	Continue temporary folding motion ↓ Temporary folding
	ACC ON	———	———	———
	ACC OFF→ ON	OPEN motion ↓ Last angle ↓ Return	Continue OPEN motion ↓ Last angle ↓ Return	Continue temporary folding motion ↓ Temporary folding
	ACC OFF	6 sec from ACC OFF ↓ CLOSE motion ↓ CLOSE	Continue OPEN motion ↓ Last angle ↓ Return ↓ 6 sec from ACC OFF ↓ Advance ↓ CLOSE motion ↓ CLOSE	Continue temporary folding motion ↓ Temporary folding ↓ 6 sec from ACC OFF ↓ CLOSE motion ↓ CLOSE
	Last memory	OPEN	OPEN	OPEN
Auto OPEN/CLOSE setting OFF	Bup ON	———	———	———
	Bup OFF	To stand-by	To stand-by	To stand-by
	Bup OFF→ ON	Continue temporary folding motion	Temporary folding reset	Temporary folding in motion
	ACC ON	———	———	———
	ACC OFF→ ON	OPEN motion ↓ Last angle ↓ Return	Continue OPEN motion ↓ Last angle ↓ Return	OPEN motion ↓ Last angle ↓ Return
	ACC OFF	OPEN motion ↓ Last angle ↓ Return	Continue OPEN motion ↓ Last angle ↓ Return	OPEN motion ↓ Last angle ↓ Return
	Last memory	OPEN	OPEN	OPEN

* When the setback is being set to OFF, there will be no advance/return motion.

7.3.2 OPERATIONAL FLOW CHART

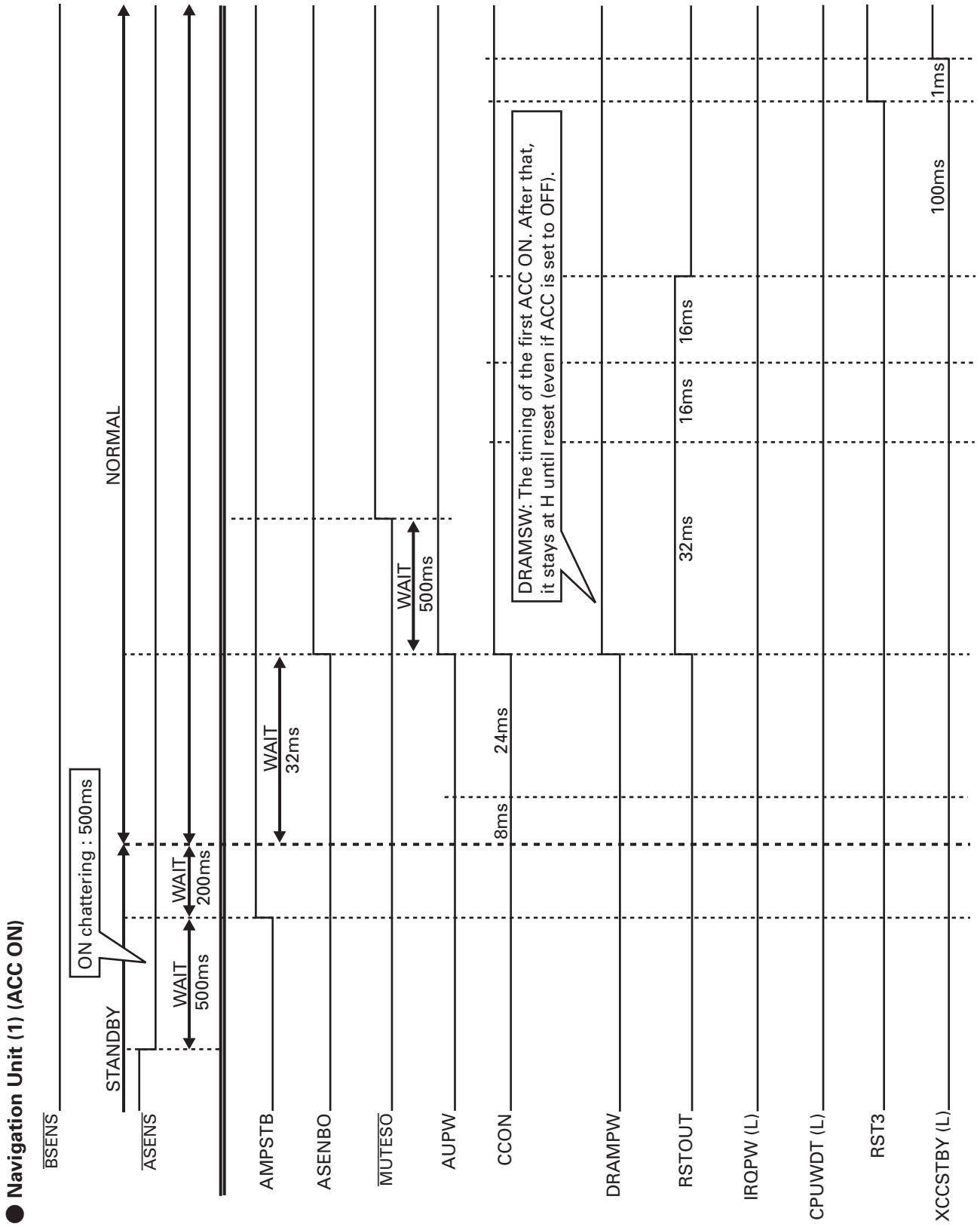

● Navigation Unit (2) (ACC OFF)

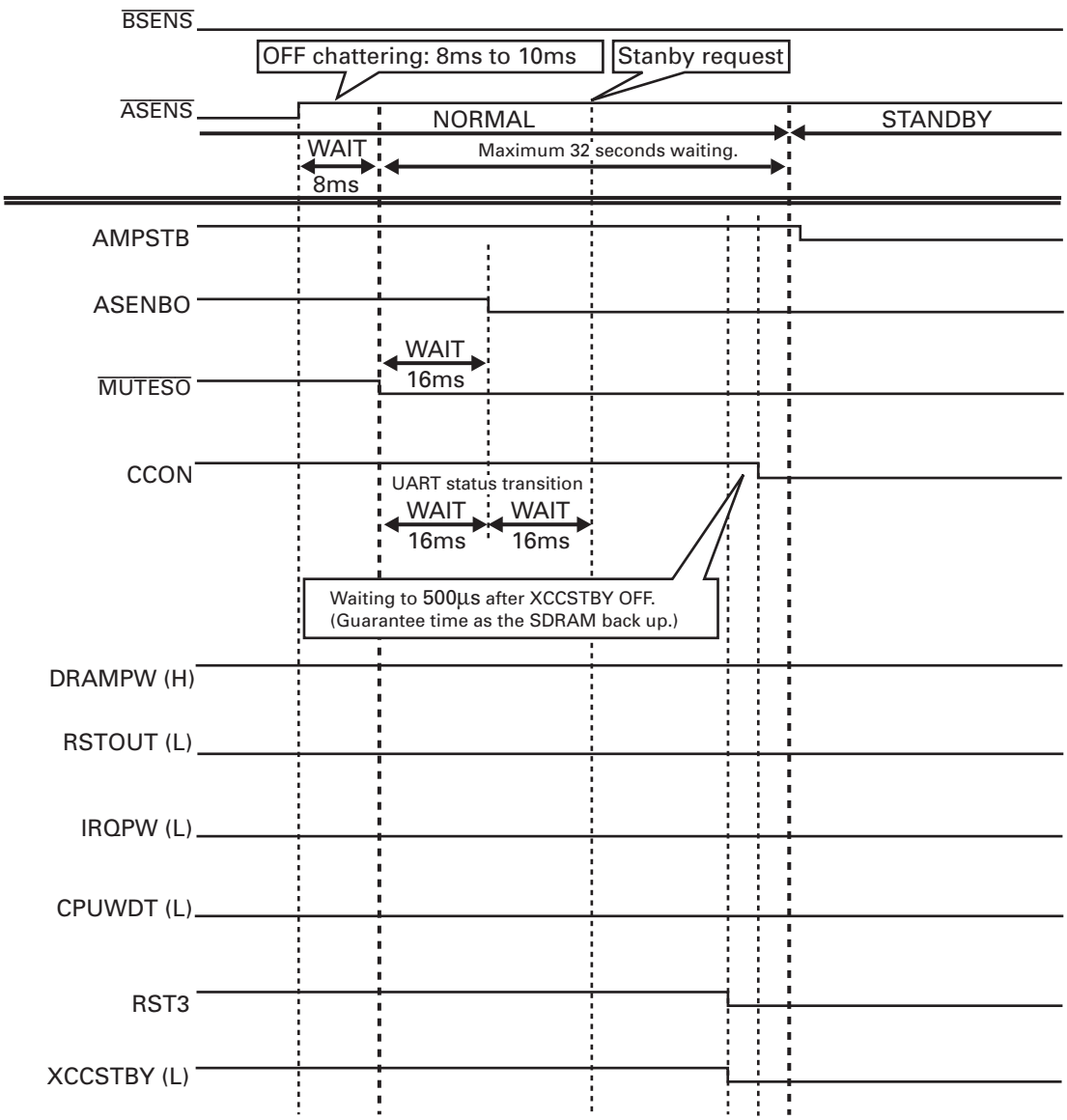

● Navigation Unit (3) (BUP OFF)

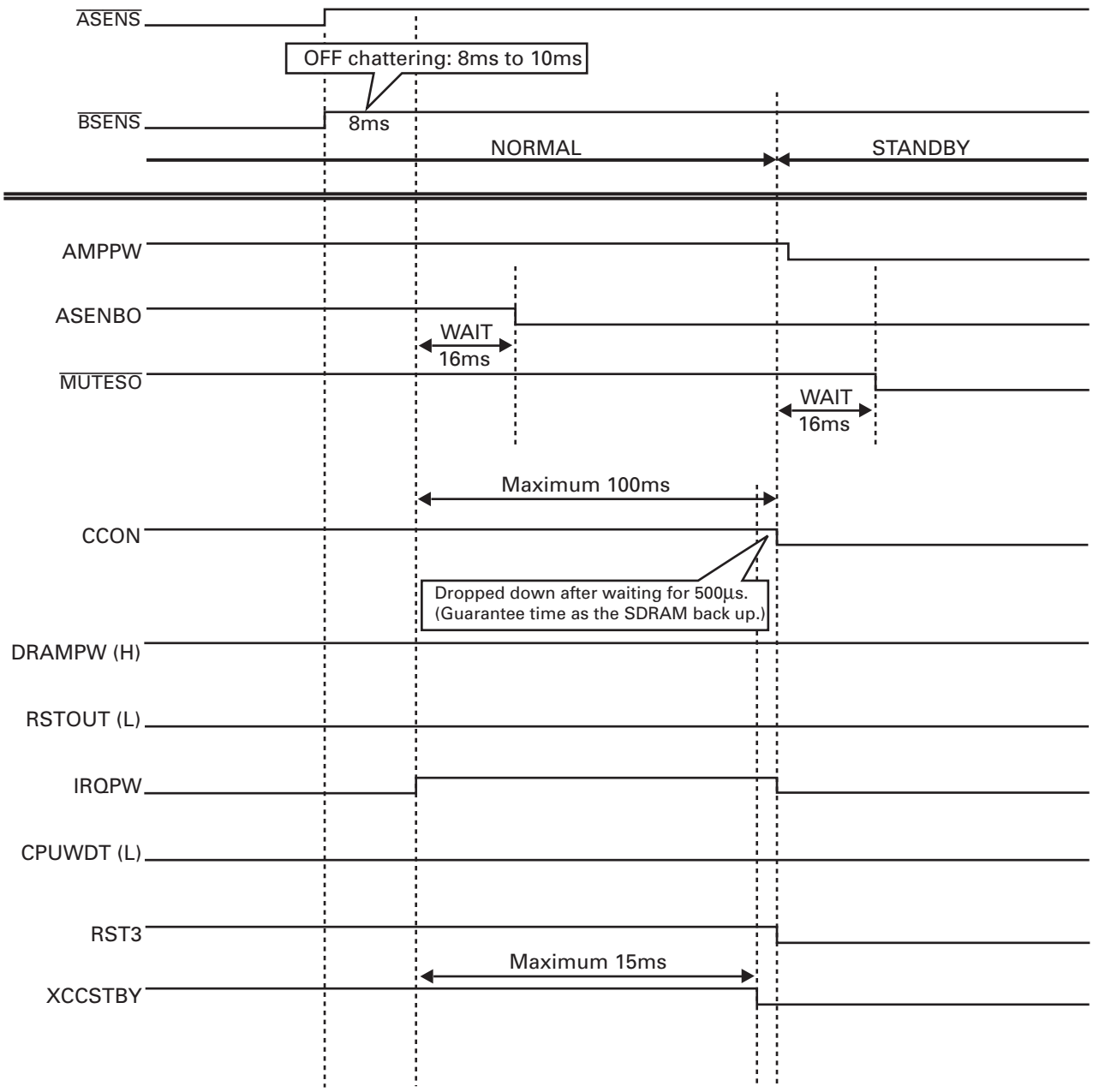

● Monitor Unit

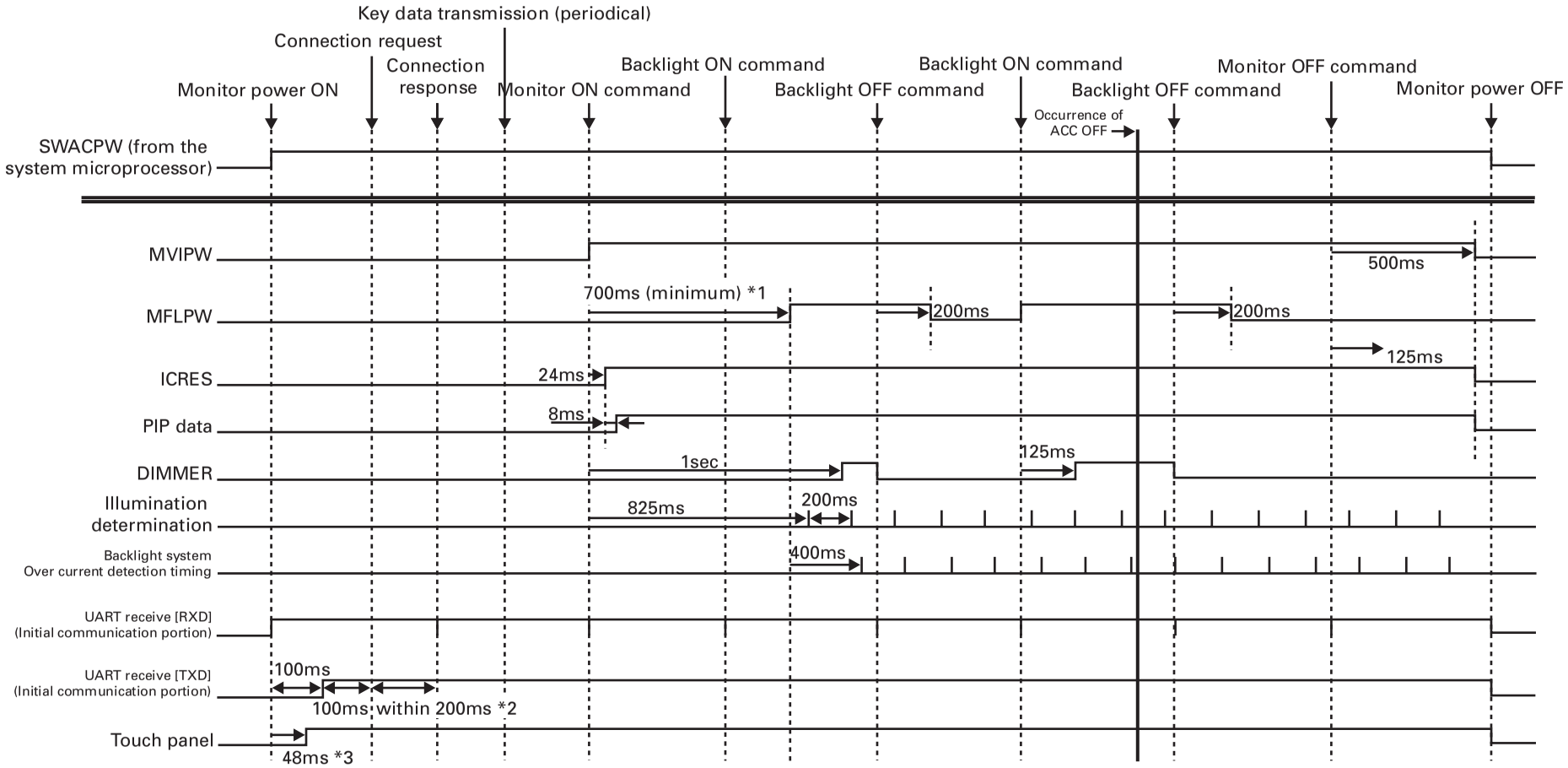

* 1 : While MFLPW will turn ON by the backlight ON command, it will not turn ON for at least 700ms after MVIPW ON.
* 2 : In case connection response is not received from the system microprocessor within 200ms from the transmission of connection request, retry process will take place. Retry process will take place for 200ms x 16 times. In case the retry process is finished without receiving the request signal, the initial communication is determined to be NG (connection NG), and no more process will take place.
* 3 : After 48 ms from the monitor power ON, the touch panel process (taking in AD coordinate) will take place.

7.4 CLEANING

Before shipping out the product, be sure to clean the following portions by using the prescribed cleaning tools:

Portions to be cleaned	Cleaning tools
DVD pickup lenses	Cleaning liquid : GEM1004 Cleaning paper : GED-008

Portions to be cleaned	Cleaning tools
Fans	Cleaning paper : GED-008

8. OPERATIONS

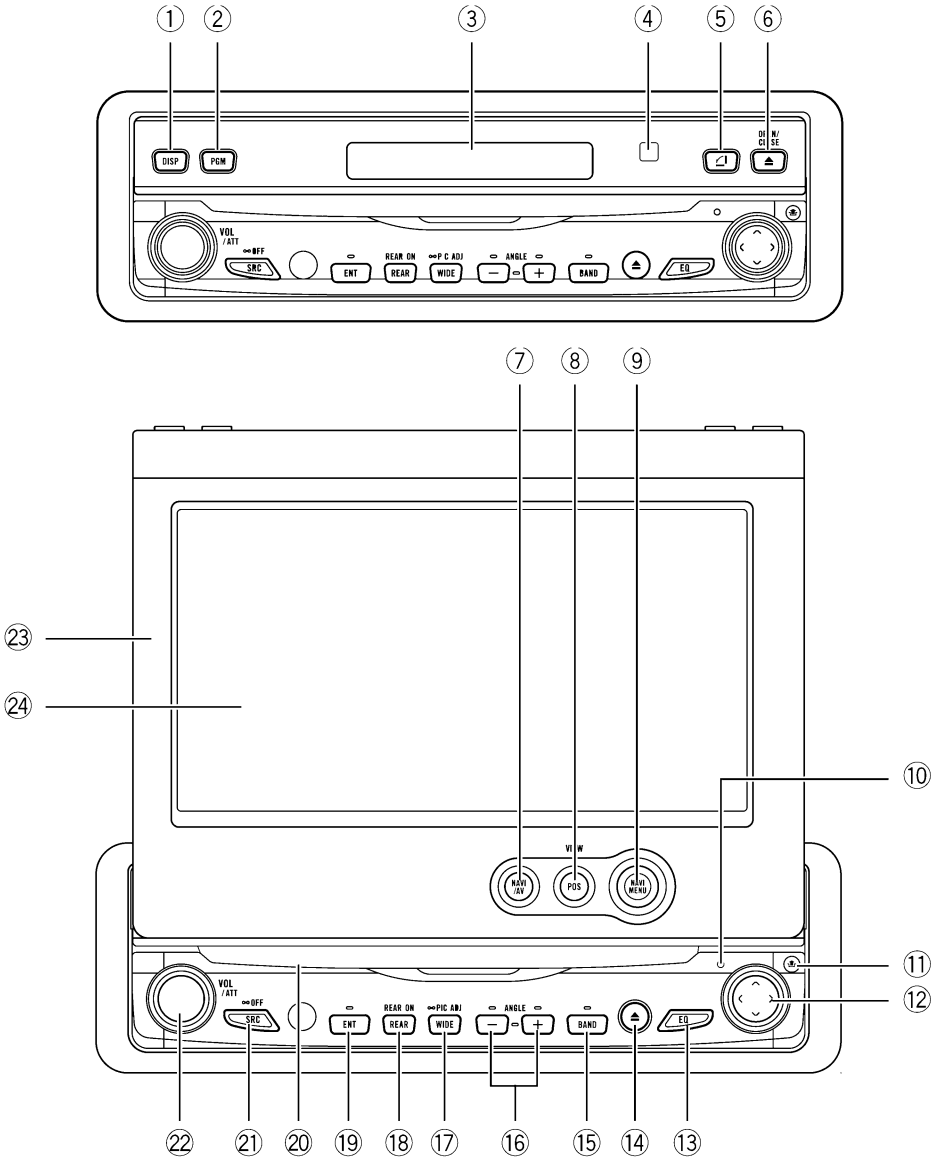

(1) DISP button
Press to select different displays.

(2) PGM button (AVIC-N1/UC)
Press to operate the preprogrammed functions for each source.

(2) TA/NEWS button (AVIC-X1/EW)
Press to turn traffic announcements function on or off. Press and hold to turn NEWS function on or off.

(3) Sub display
Current time or the information of the audio source currently playing is displayed when the LCD panel is closed.

(4) Ambient light sensor
Senses ambient light. This system automatically adjusts the brightness of the display to compensate for ambient light.

(5) FLIP DOWN/CLOCK button
Press to turn the LCD panel horizontal temporarily when the LCD panel is upright.
Press to turn the clock of the sub display on or off when the LCD panel is closed.

(6) OPEN/CLOSE button
Press to open or close the LCD panel.

(7) NAVI/AV button
Use to switch between Navigation map displays and audio operation displays.

(8) POS button
Press to view the map or return to guidance.
Also, when the map is scrolling, pressing this button returns you to the display of the map of your surroundings.
Use to switch the view mode of the navigation when the map of your surroundings is displayed.

(9) NAVI MENU button
Press to display a menu of Navigation.

(10) RESET button
Press to return to the factory settings (initial settings).

(11) DETACH button
Press to remove the front panel from the display unit.

(12) Joystick
Move to do manual seek tuning, fast forward, reverse and track search controls. Push to display **A.MENU**.

(13) EQ button
Press to select various equalizer curves.

(14) EJECT button
Press to eject a disc from this unit.

(15) BAND button
Radio:
Press to select among three FM and one AM bands.
Built-in DVD drive:
When playing back a disc containing an MP3 file and audio data (CD-DA), pressing this button switches playback between the MP3 file and CD-DA. Touch and hold this button when a disc containing an MP3 file is inserted returns you to the root folder.

(16) ANGLE (+/–) button
Press to change the LCD panel angle.

(17) WIDE button
Press to select a desired mode for enlarging a 4:3 picture to a 16:9 one.
Press and hold to enter the **PICTURE ADJUST** mode.

(18) REAR button
Press to output to the REAR OUT terminal the sound and images of a disc inserted in the built-in DVD drive that is different the currently selected source.

(19) ENT button
Press to switch between the background displays.

(20) Disc loading slot
Insert a disc to play.

(21) SRC (SOURCE) button
This unit is turned on by selecting a source. Press to cycle through all of the available sources.
Press and hold to turn the source off.

(22) VOLUME/ATT button
Rotate to increase or decrease the volume. Press to quickly lower the volume level, by about 90%.
Press once more to return to the original volume level.

(23) LCD panel

(24) LCD screen

● CONNECTION DIAGRAM (AVIC-N1/UC)

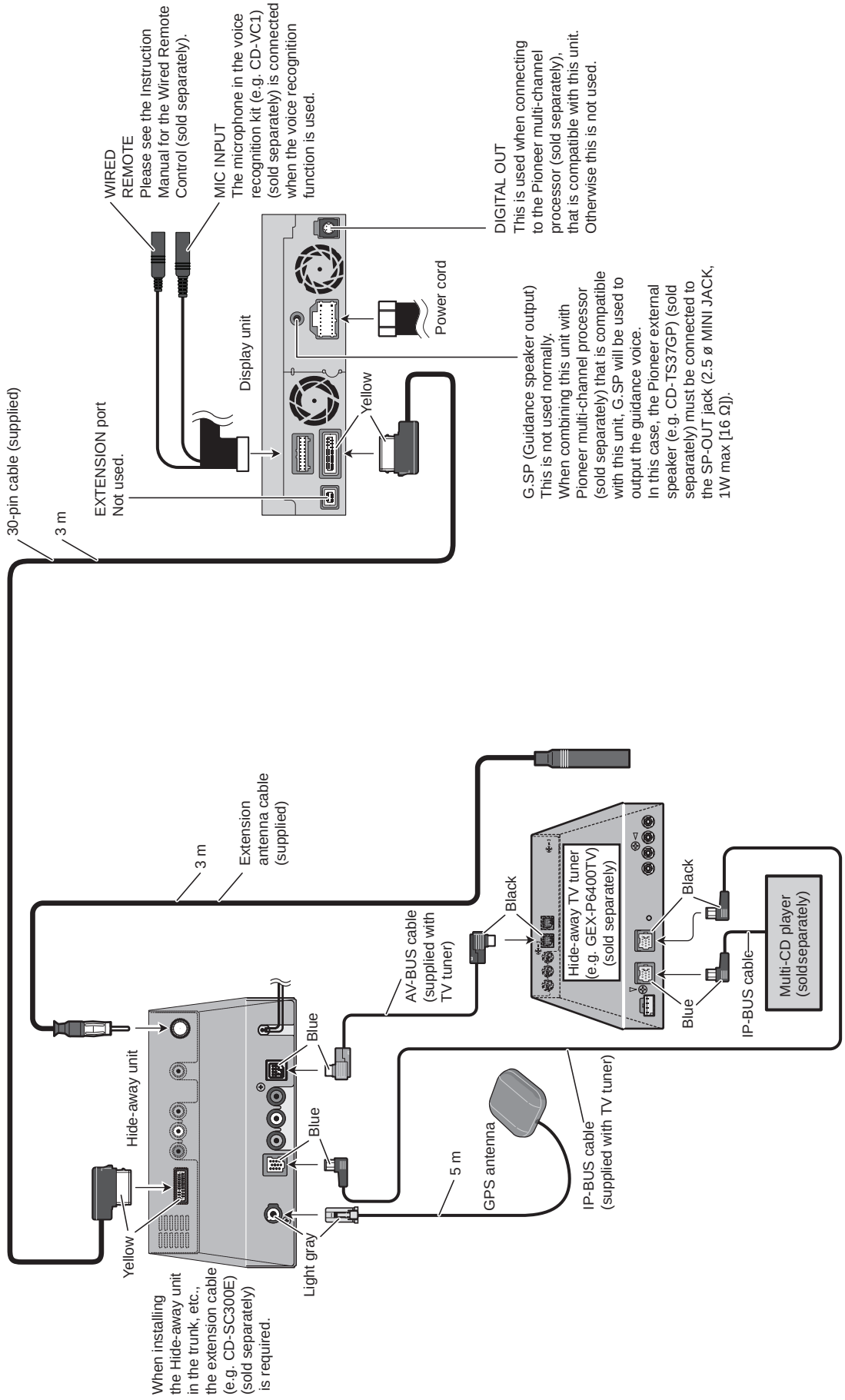

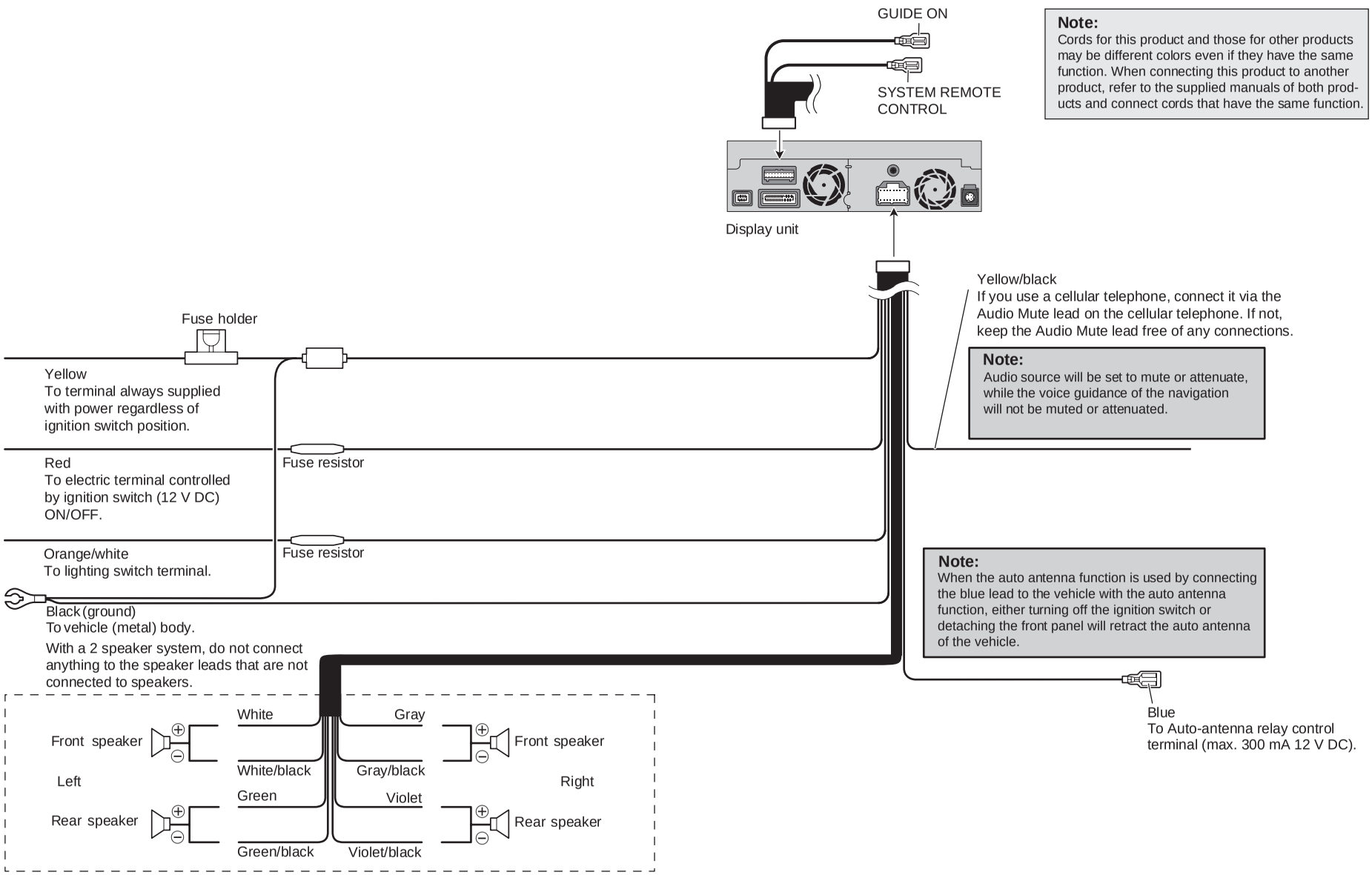

Note:
Cords for this product and those for other products may be different colors even if they have the same function. When connecting this product to another product, refer to the supplied manuals of both products and connect cords that have the same function.

Note:
Audio source will be set to mute or attenuate, while the voice guidance of the navigation will not be muted or attenuated.

Note:
When the auto antenna function is used by connecting the blue lead to the vehicle with the auto antenna function, either turning off the ignition switch or detaching the front panel will retract the auto antenna of the vehicle.

● CONNECTION DIAGRAM (AVIC-X1/EW)

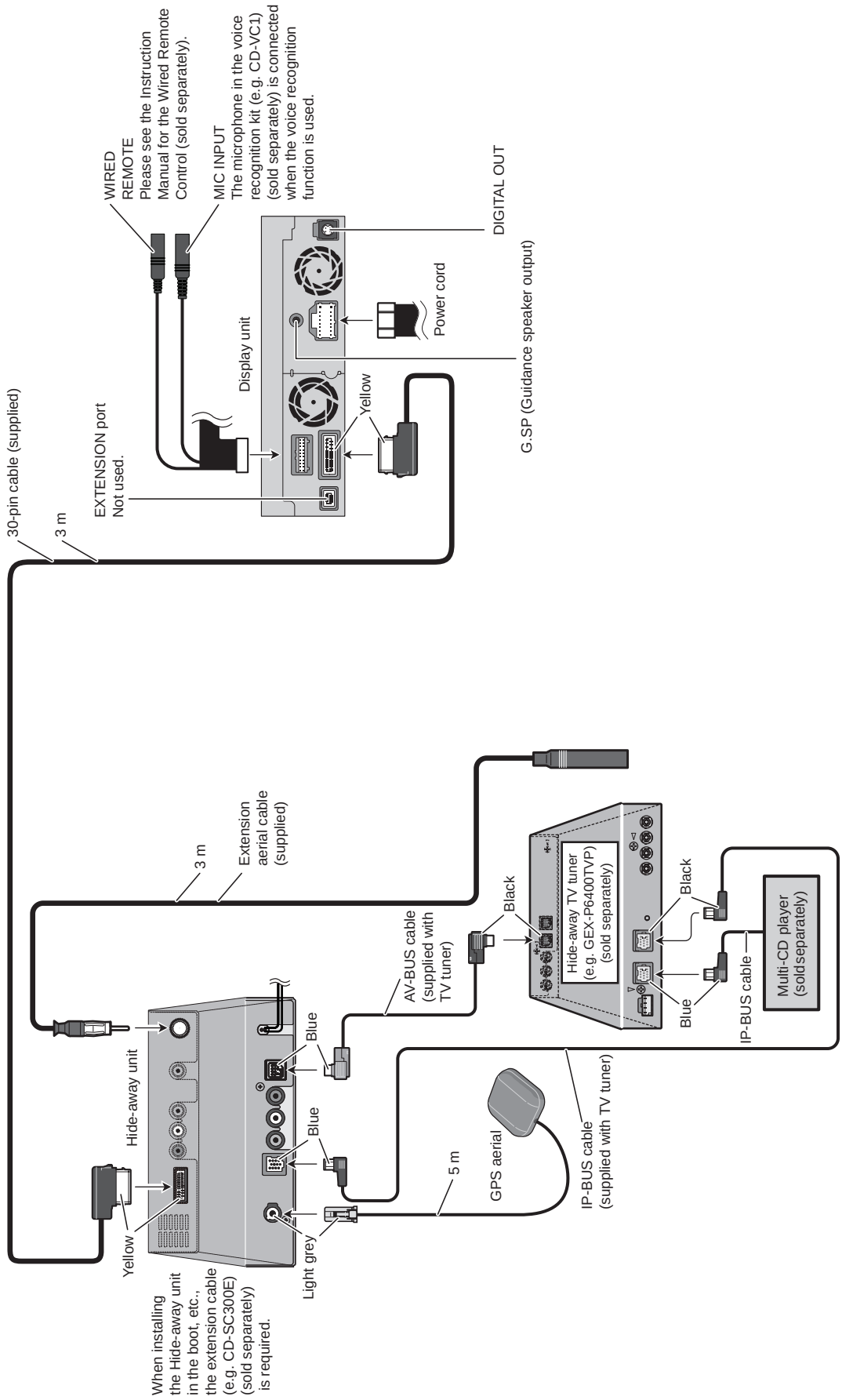

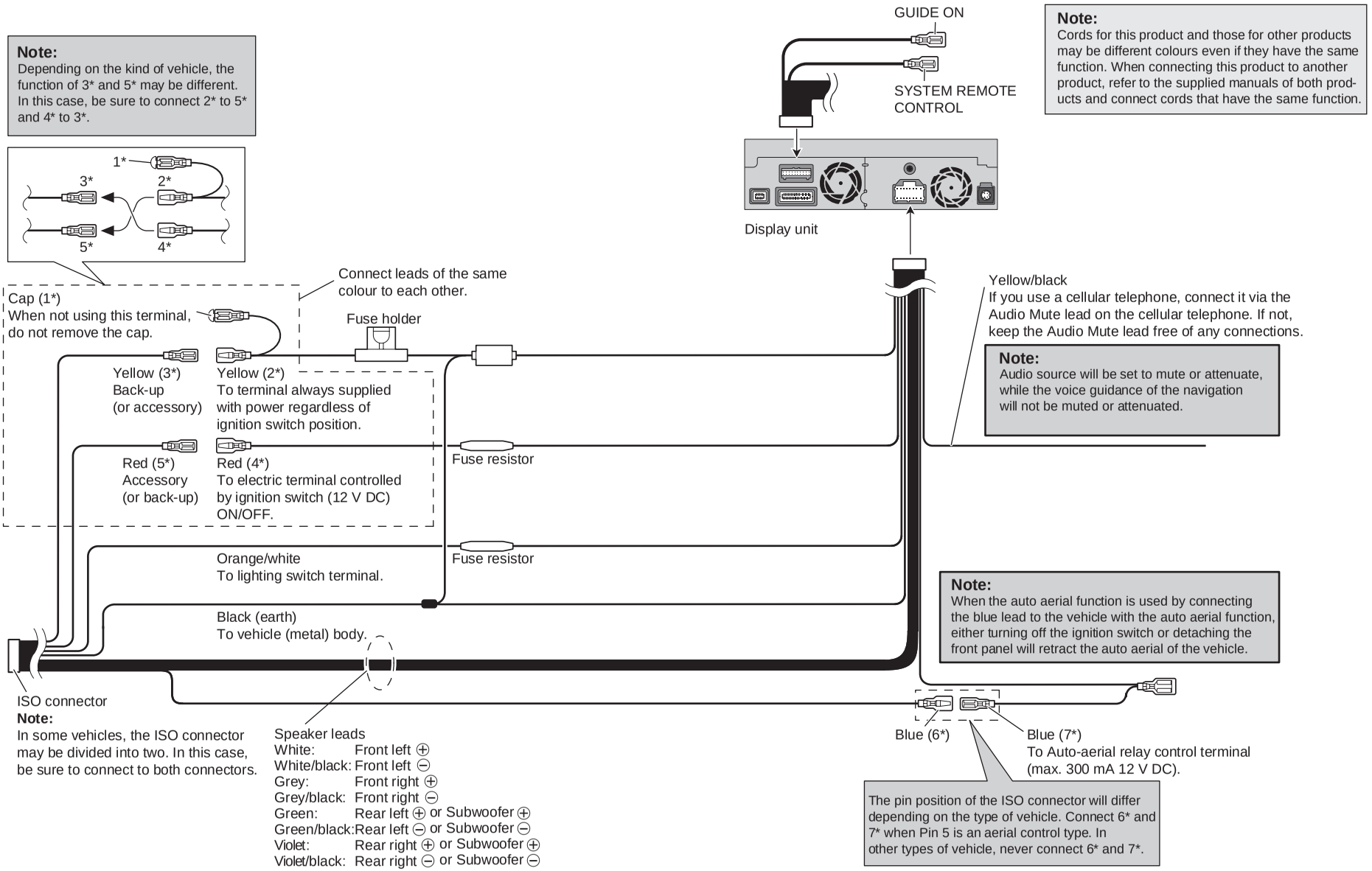
Note:
Depending on the kind of vehicle, the function of 3* and 5* may be different. In this case, be sure to connect 2* to 5* and 4* to 3*.
1*
2*
3*
4*
5*
Cap (1*)
When not using this terminal, do not remove the cap.
Connect leads of the same colour to each other.
Fuse holder
Yellow (3*)
Back-up
(or accessory)
Yellow (2*)
To terminal always supplied with power regardless of ignition switch position.
Red (5*)
Accessory
(or back-up)
Red (4*)
To electric terminal controlled by ignition switch (12 V DC) ON/OFF.
Fuse resistor
Orange/white
To lighting switch terminal.
Fuse resistor
Black (earth)
To vehicle (metal) body.
ISO connector
Note:
In some vehicles, the ISO connector may be divided into two. In this case, be sure to connect to both connectors.
Speaker leads
White: Front left ⊕
White/black: Front left ⊖
Grey: Front right ⊕
Grey/black: Front right ⊖
Green: Rear left ⊕ or Subwoofer ⊕
Green/black: Rear left ⊖ or Subwoofer ⊖
Violet: Rear right ⊕ or Subwoofer ⊕
Violet/black: Rear right ⊖ or Subwoofer ⊖
GUIDE ON
SYSTEM REMOTE CONTROL
Display unit
Note:
Cords for this product and those for other products may be different colours even if they have the same function. When connecting this product to another product, refer to the supplied manuals of both products and connect cords that have the same function.
Yellow/black
If you use a cellular telephone, connect it via the Audio Mute lead on the cellular telephone. If not, keep the Audio Mute lead free of any connections.
Note:
Audio source will be set to mute or attenuate, while the voice guidance of the navigation will not be muted or attenuated.
Note:
When the auto aerial function is used by connecting the blue lead to the vehicle with the auto aerial function, either turning off the ignition switch or detaching the front panel will retract the auto aerial of the vehicle.
Blue (6*)
Blue (7*)
To Auto-aerial relay control terminal (max. 300 mA 12 V DC).
The pin position of the ISO connector will differ depending on the type of vehicle. Connect 6* and 7* when Pin 5 is an aerial control type. In other types of vehicle, never connect 6* and 7*.

After Installing the Unit

1. **Reconnecting the battery.**

   First, double-check that all connections are correct and that the unit is installed correctly. Reassemble all vehicle components that you previously removed. Then reconnect the negative (—) cable to the negative (—) terminal of the battery.

2. **Start the engine.**

3. **Press the RESET button on the display unit.**

   Press the RESET button on the display unit using a pointed object such as the tip of a pen.

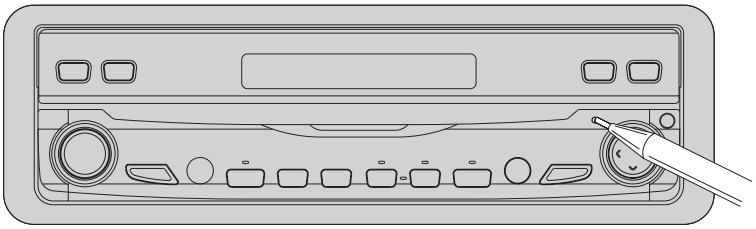

4. **Enter the following settings:**

   ¥ Install the programme in the navigation system.
   ¥ Drive until the initialized sensors start operating normally.
   ¥ Set the time and language.

Note:
If you reconnected the Hide-away unit, press the RESET button.

After installing the unit, be sure to check at a safe place that the vehicle is performing normally.

● JIG's List

Function	Name	Jig No.
CC Unit (CN609) <--> Main Unit (CN3801)	PCB	GGF1461
CC Unit (CN609) <--> GGF1461	40P FFC	GGD1170
CC Unit (CN609) <--> GGF1461	20P FFC	GGD1209
CC Unit (CN608) <--> Monitor PCB (CN4002)	PCB	GGF1483
CC Unit (CN2701) <--> Panel PCB (CN5901)	18P FFC	GGD1208
Monitor PCB (CN4002) <--> GGF1483	36P FFC	GGD1366
Monitor Adjustment PCB	PCB	GGF1416
JIG connector Assy	PCB and FFC	GGF1463
Monitor PCB ("FOR SERVICE" 14P terminal) <--> GGF1463	14P FFC	GGD1323
TEST DISC (Operation check)	CD-ROM or DVD-ROM	GGV1137
DVD pickup lenses	CLEANING LIQUID	GEM1004
DVD pickup lenses and Fans	CLEANING PAPER	GED-008